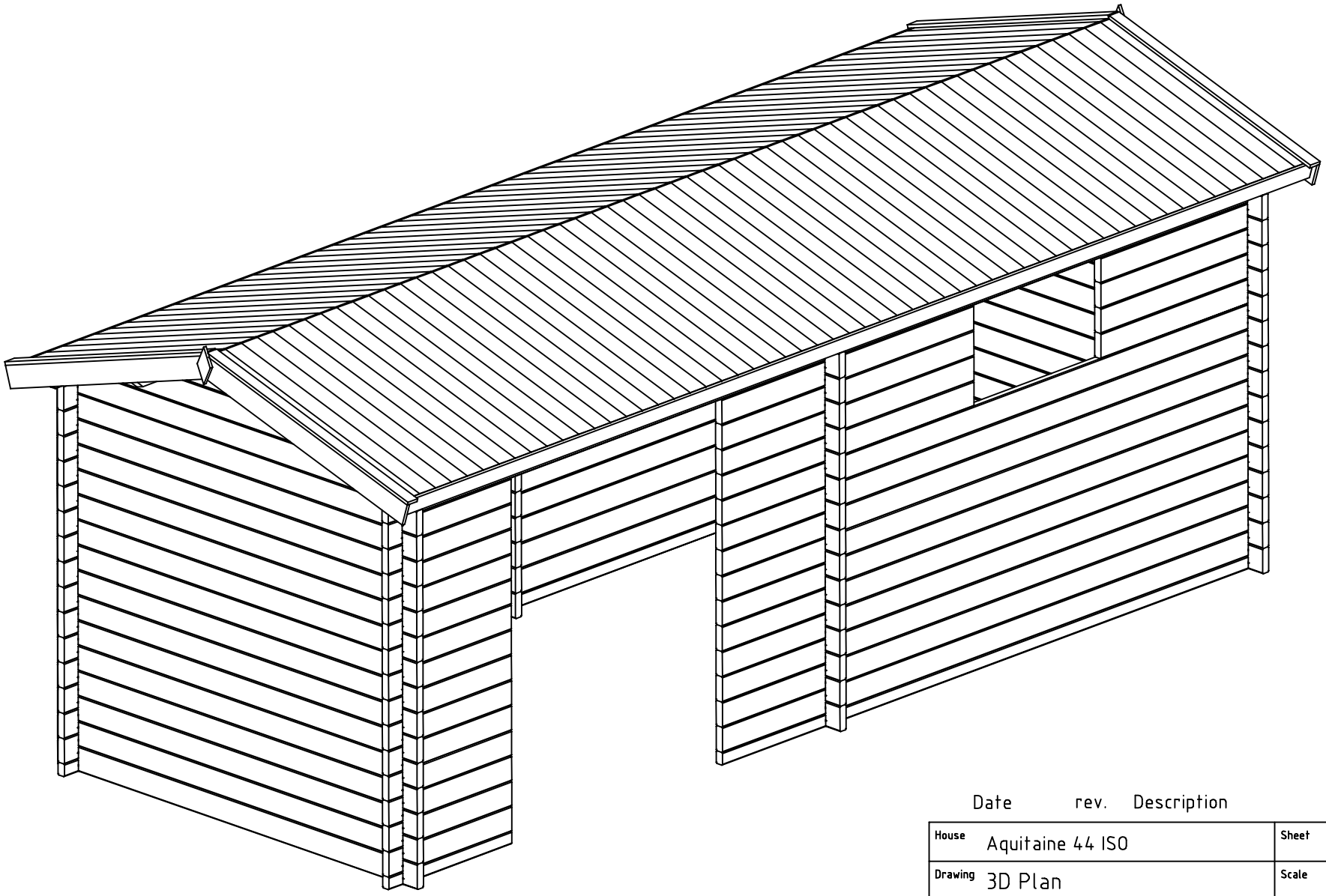

Date rev. Description

House	Aquitaine 44 ISO	Sheet	1
Drawing	3D Plan	Scale	
Material	44x135	Date	07.10.2019
Drawer	RP	File	Aquitaine 44 ISO 3D.dwg

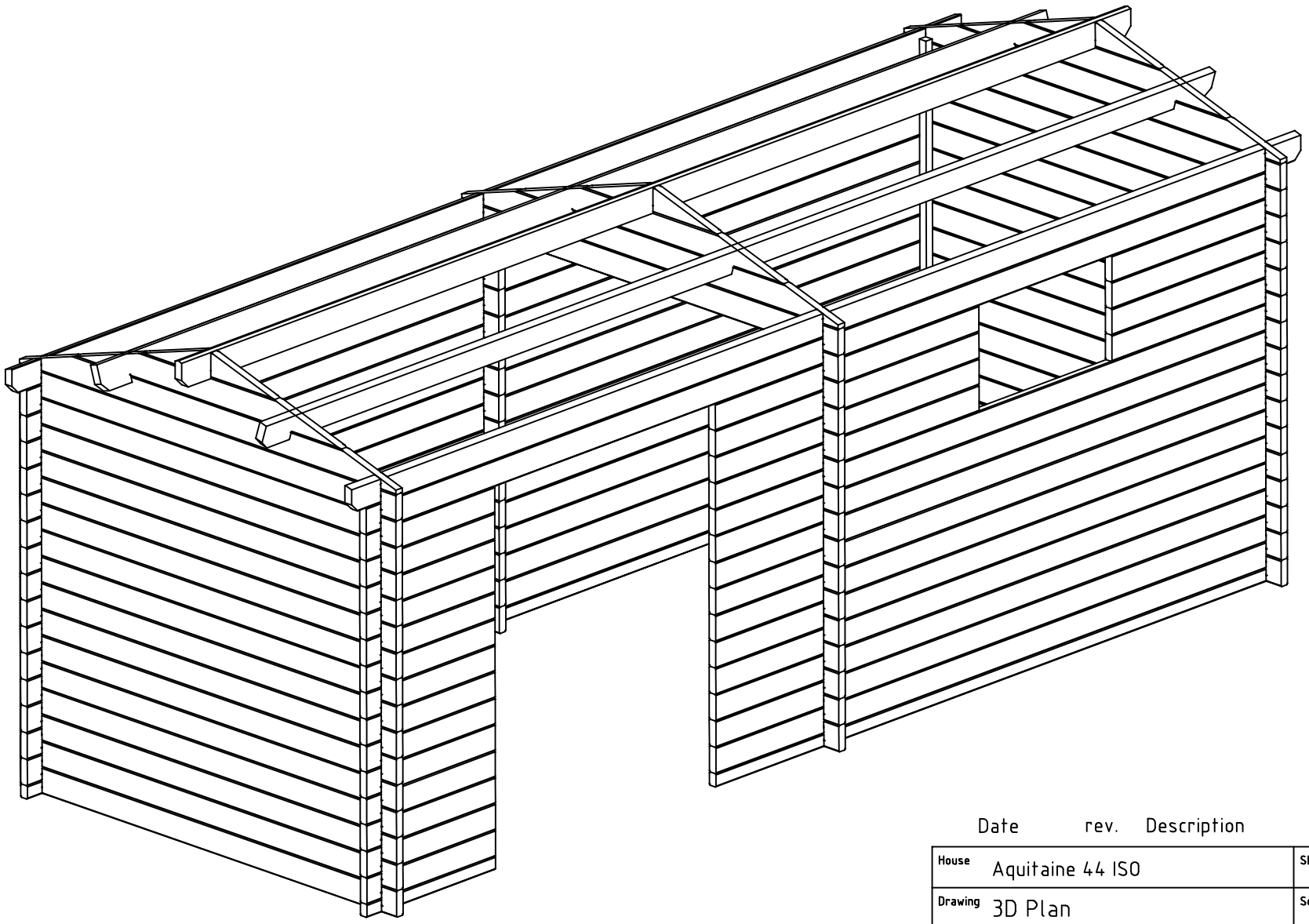

Date rev. Description

House	Aquitaine 44 ISO	Sheet	2
Drawing	3D Plan	Scale	
Material	44x135	Date	07.10.2019
Drawer	RP	File	Aquitaine 44 ISO 3D.dwg

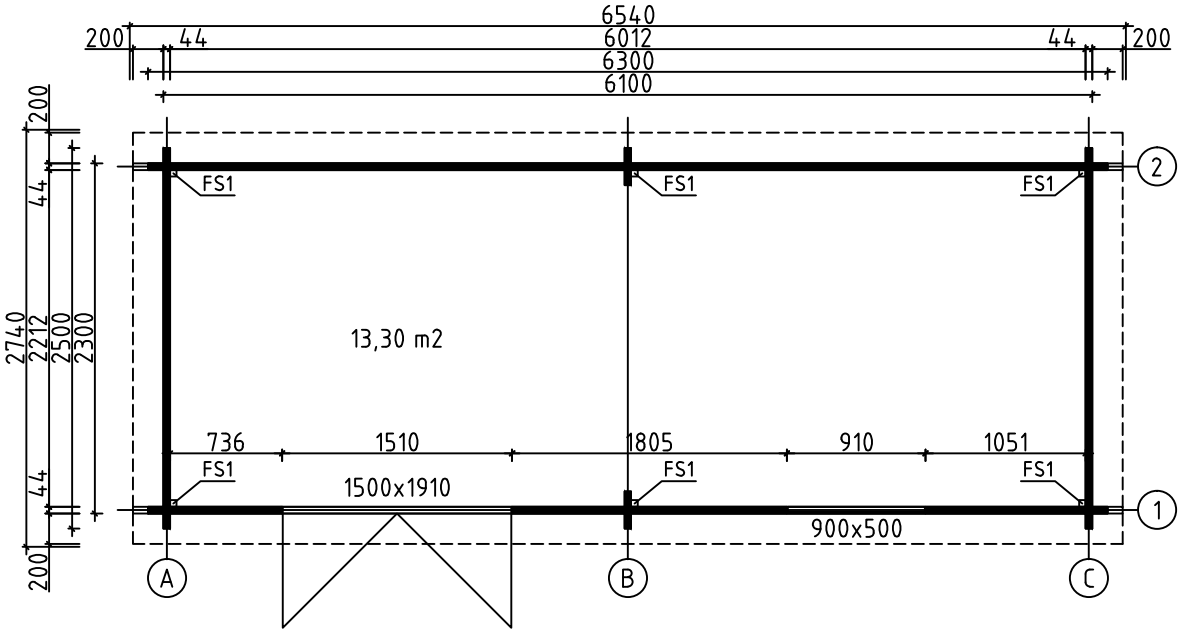

House	Aquitaine 44 ISO	Sheet	3
Drawing	GROUNDPLAN	Scale	1:50
Material	44x135	Date	07.10.2019
Drawer	RP	File	Aquitaine 44 ISO.dwg

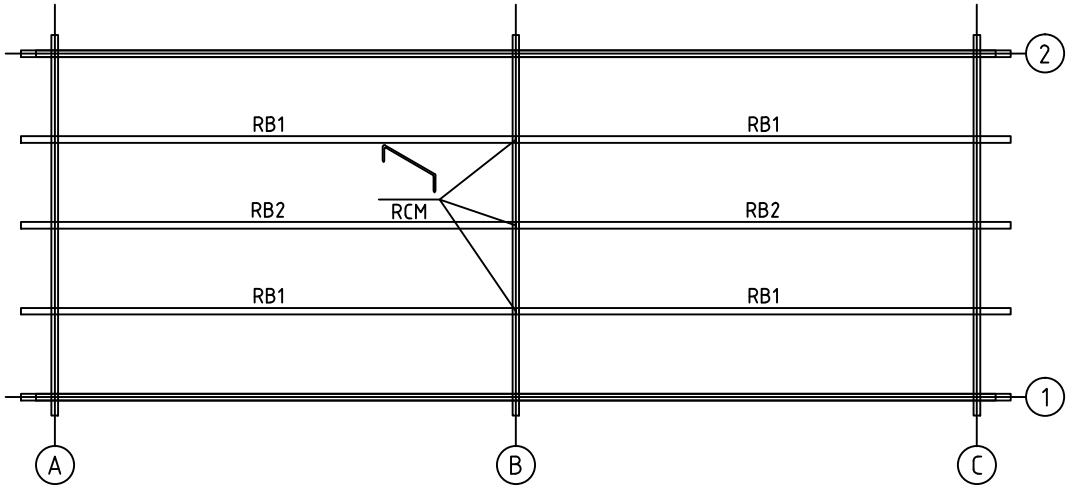

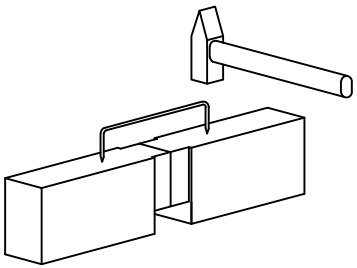

House	Aquitaine 44 ISO	Sheet	4
Drawing	ROOFBEAMS	Scale	1:50
Material	43x140	Date	07.10.2019
Drawer	RP	File	Aquitaine 44 ISO.dwg

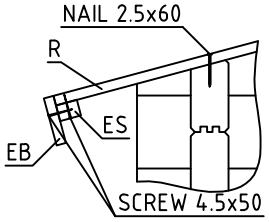

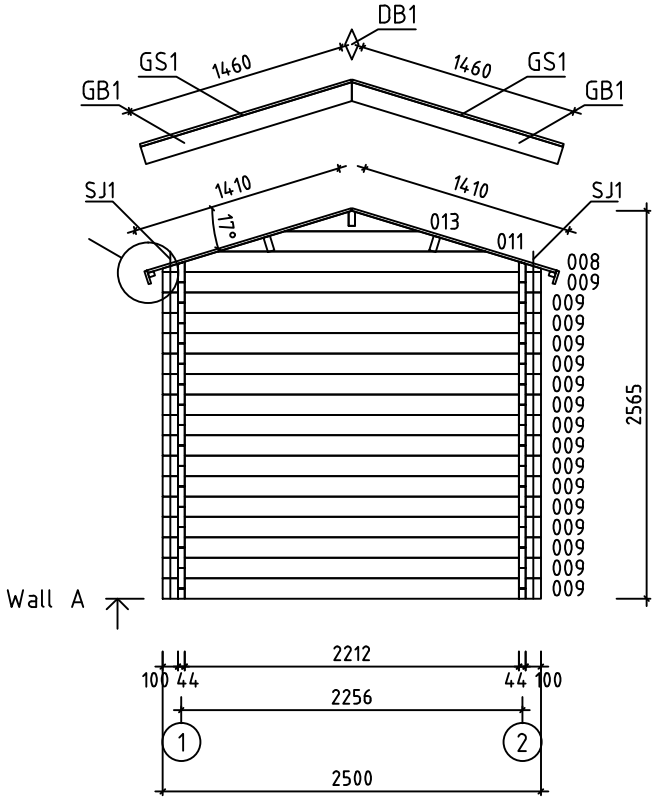

House	Aquitaine 44 ISO	Sheet	5
Drawing	WALL A	Scale	1:50
Material	44x135	Date	07.10.2019
Drawer	RP	File	Aquitaine 44 ISO.dwg

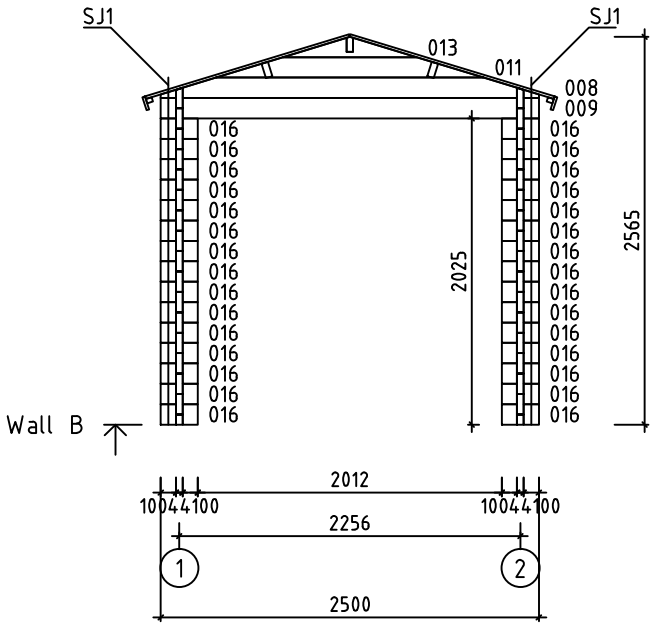

House	Aquitaine 44 ISO	Sheet	6
Drawing	WALL B	Scale	1:50
Material	44x135	Date	07.10.2019
Drawer	RP	File	Aquitaine 44 ISO.dwg

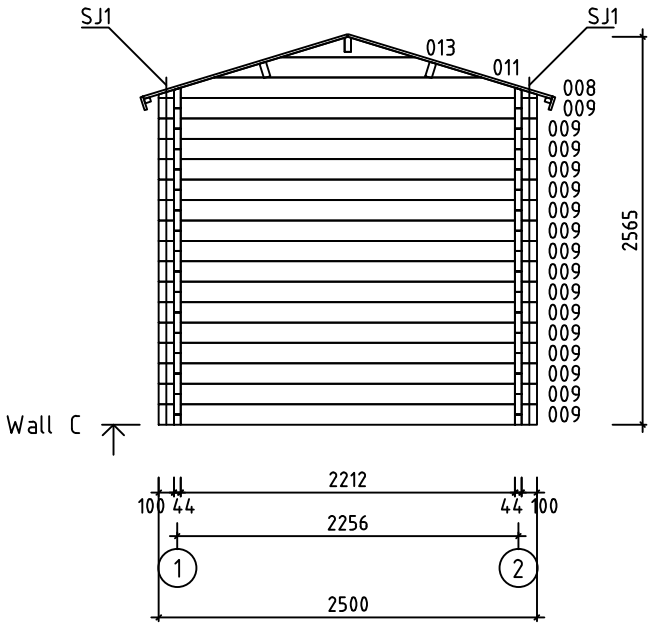

House	Aquitaine 44 ISO	Sheet	7
Drawing	WALL C	Scale	1:50
Material	44x135	Date	07.10.2019
Drawer	RP	File	Aquitaine 44 ISO.dwg

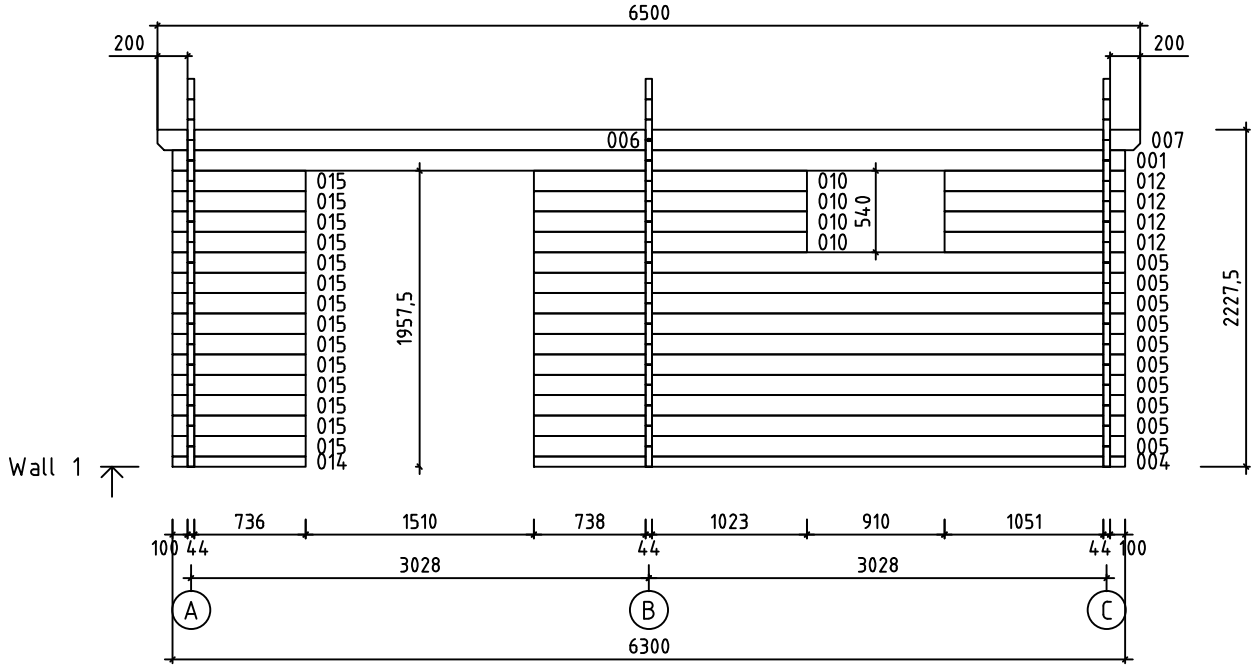

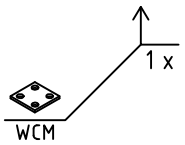

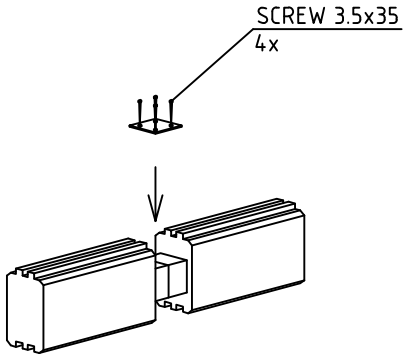

House	Aquitaine 44 ISO	Sheet	8
Drawing	WALL 1	Scale	1:50
Material	44x135	Date	07.10.2019
Drawer	RP	File	Aquitaine 44 ISO.dwg

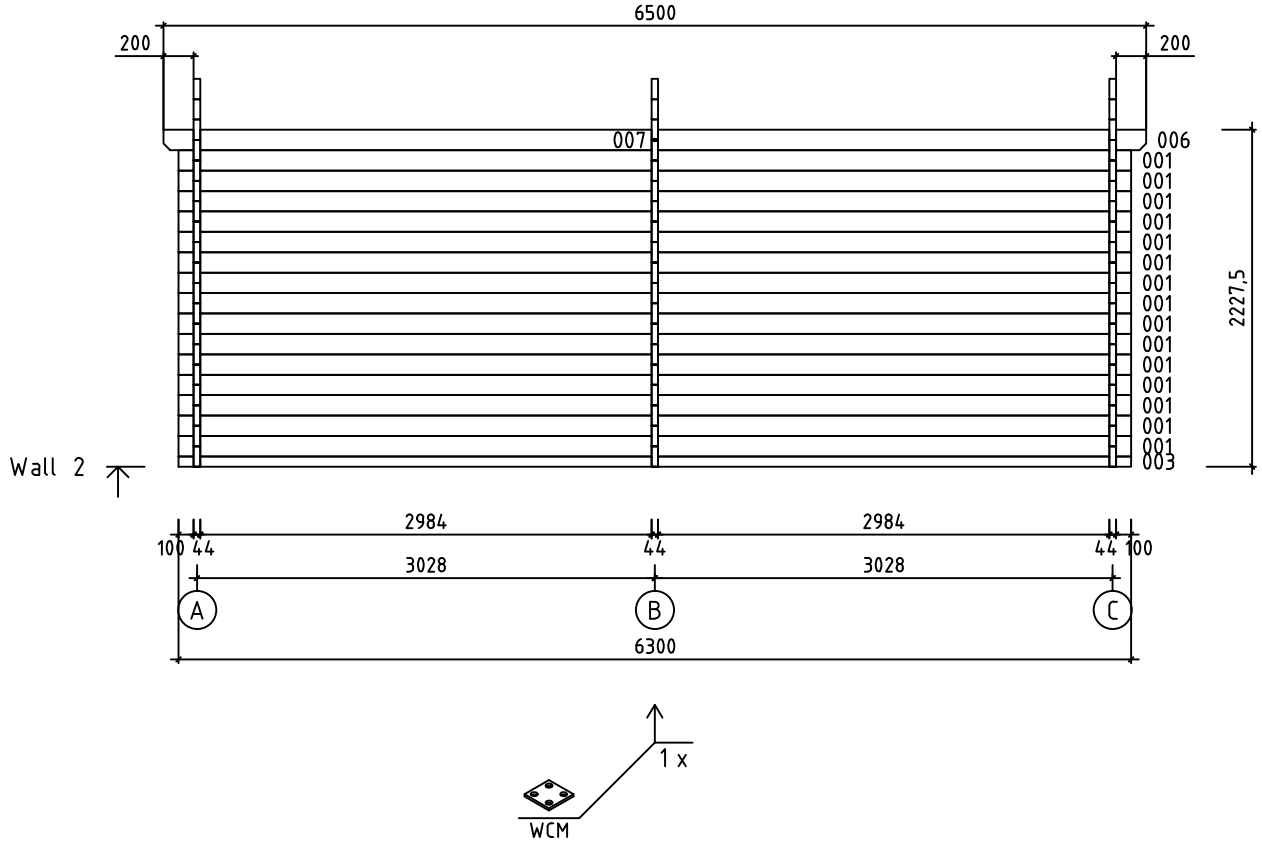

House	Aquitaine 44 ISO	Sheet	9
Drawing	WALL 2	Scale	1:50
Material	44x135	Date	07.10.2019
Drawer	RP	File	Aquitaine 44 ISO.dwg

Pos	Specification-Bestimmung-Spécification	PCS	Profile (mm)	L (mm)
001	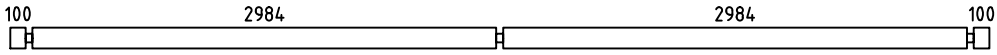	16	44x135	6300
002	SPARE BEAM-ERZATZBOHLE-MADRIER DE RÉSERVE 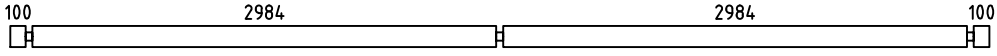	1	44x135	6300
003	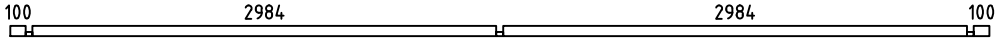	1	44x68	6300
004	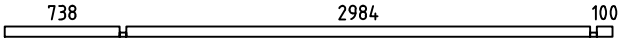	1	44x68	3910
005	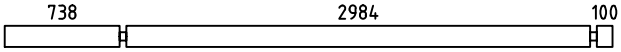	10	44x135	3910
006	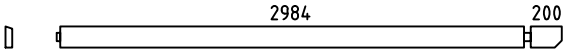	2	44x135	3250
007	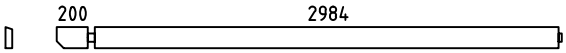	2	44x135	3250
009	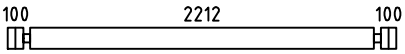	33	44x135	2500
010	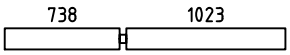	4	44x135	1805
012	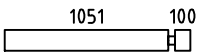	4	44x135	1195
014	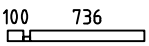	1	44x68	880
015	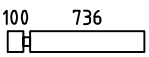	14	44x135	880
016		30	44x135	244
WA-1 WB-1 WC-1	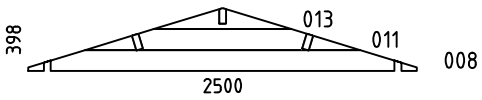	3	44x398	2500
HB	HIT BLOCK-SCHLAGHÖLZER-MADRIERS D´ASSEMBLAGE 	2	44x135	300
FS1	FIXING SLAT-BEFESTIGUNGSLEISTE-BAGUETTE DE FIXATION 	6	43x43	2130
RB1	ROOFBEAMS-DACHBALKEN-SOLIVES DE PLAFOND 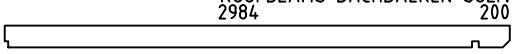	4	43x140	3250
RB2	ROOFBEAMS-DACHBALKEN-SOLIVES DE PLAFOND 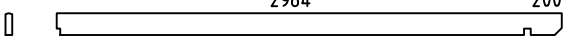	2	43x140	3250
R1	ROOFBOARD-DACHBRETT-VOLIGES  or-oder-ou	116+2 152+2	18x114 18x88	1410
GB1	GABLE BOARD-GIEBELBLENDE-PLANCHE DE RIVE 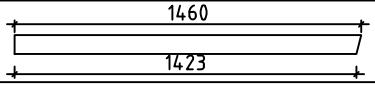	4	18x120	1460
GS1	ROOF FELT FILLET-GIEBELLEISTE-BAGUETTES POUR FIXER LES PLANCHES DE RIVE 	4	18x70	1460
EB1	EAVE BOARD-TRAUFBRETT-LATTES SOUS VOLIGES 	4	18x90	3250
ES1	EAVE SLAT-TRAUFENLEISTE-BAGUETTES POUR FIXER LES LATTES SOUS VOLIGES 	4	30x40	3250
DB1	DIAMOND-RAUTE-ELÉMENTS DE DÉCORATION 	2	18x90	200

House Aquitaine 44 ISO	Material	File Aquitaine 44 ISO.dwg	Sheet 10

Pos	Specification-Bestimmung-Spécification	PCS	Profile (mm)	L (mm)
WCM	WALLBEAMS CONNECTING METAL-WANDBOHLEN BEFESTIGUNG -METALLE-PATTE D´ASSEMBLAGE	2	25	25
RCM	ROOFBEAMS CONNECTING METAL-DACHBALKEN BEFESTIGUNGSMETALLE -CONNECTEUR MÉTALLIQUE POUR SOLIVES DE PLAFOND	3	⌀6.0	200
SJ1	SCREW JOINT-GEWINDESTANGE -TIGES FILETÉS	6	M10	2230
	NAIL-NAGEL-CLOUS FOR-FÜR-POUR COATING FOR ROOF-BESCHICHTUNG FÜR DACH-REVÉTEMENT DE TOIT	390	⌀2.5	20
	NAIL-NAGEL-CLOUS FOR-FÜR-POUR R1	460	⌀2.5	60
	SCREWS-SCHRAUBEN-VIS FOR-FÜR-POUR WCM	8	⌀3.5	35
	SCREWS-SCHRAUBEN-VIS FOR-FÜR-POUR GB1, GS1, EB1, ES1, DB1	80	⌀4.5	50
	SCREWS-SCHRAUBEN-VIS FOR-FÜR-POUR FS1	24	⌀4.5	70
	SCREWS-SCHRAUBEN-VIS FOR-FÜR-POUR RB1, RB2 WA-1, WB-1, WC-1	30	⌀6.0	160
	COATING FOR ROOF-BESCHICHTUNG FÜR DACH-REVÉTEMENT DE TOIT	2,0	R = 15m	
	DOUBLEDOOR-DOPPELTÜR-DOUBLE PORTE (right-rechts-droit) AST__ISO__PL P	1	1500	1910
	1500 / 1910	1		
		1		
		1		
		6		
	WINDOW-FENSTER-FENÉTRE (right-rechts-droit) AST__ISO__KP__AL__PL P	1	900	500
	900 / 500	1		
		1		

House	Material	File	Sheet
Aquitaine 44 ISO		Aquitaine 44 ISO.dwg	11

#001	1,2	6300	16
#002		6300	1
#003	2	6300	1
#004	1	3910	1
#005	1	3910	10
#006	1,2	3250	2
#007	1,2	3250	2
#008	A,B,C	2500	3
#009	A,B,C	2500	33
#010	1	1805	4
#011	A,B,C	1770	3
#012	1	1195	4
#013	A,B,C	885	3
#014	1	880	1
#015	1	880	14
#016	B	244	30