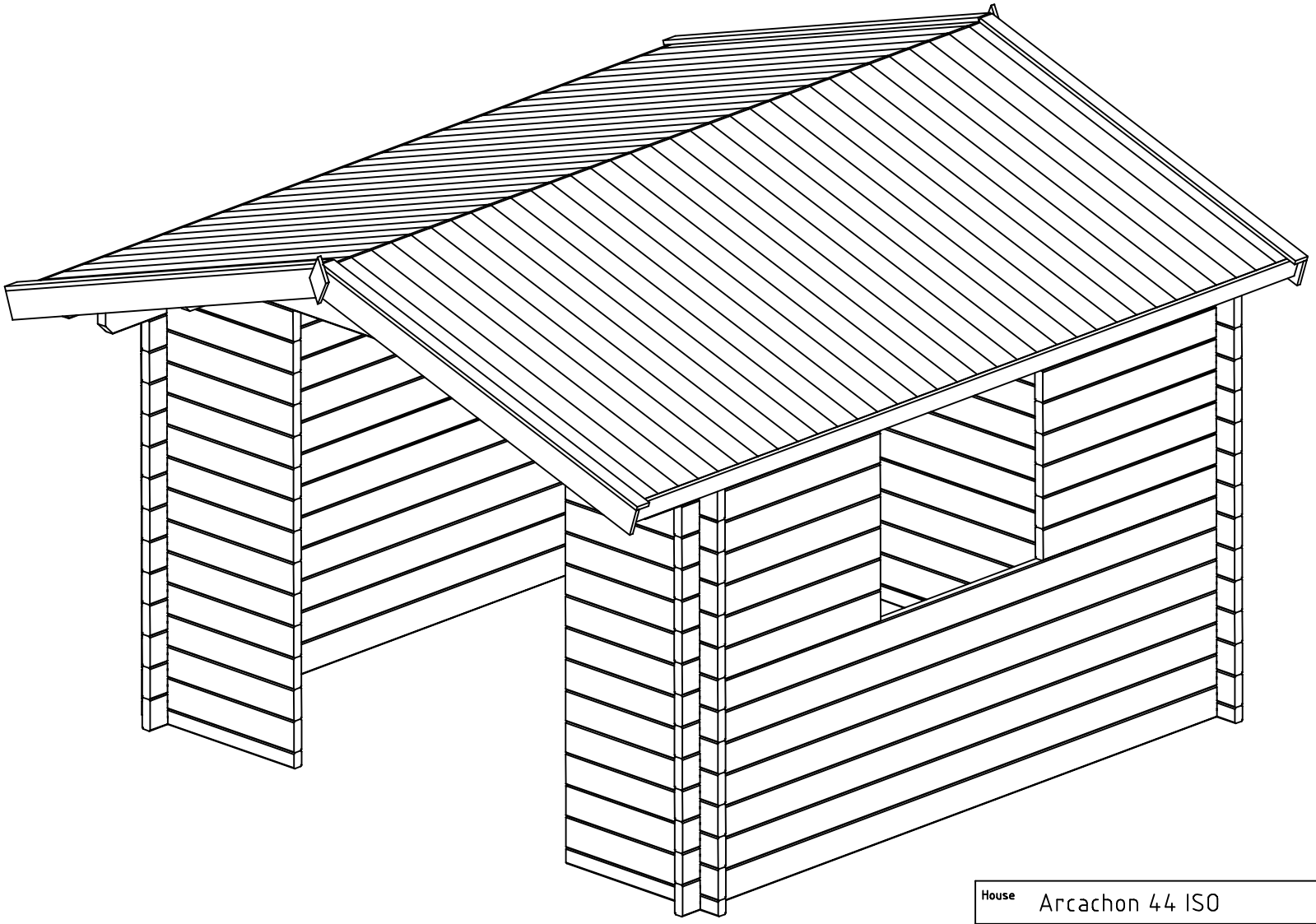

House	Arcachon 44 ISO	Sheet	1
Drawing	3D	Scale	
Material	44x135	Date	27.12.2018
Drawer	RP	File	Arcachon 44 ISO 3D.dwg

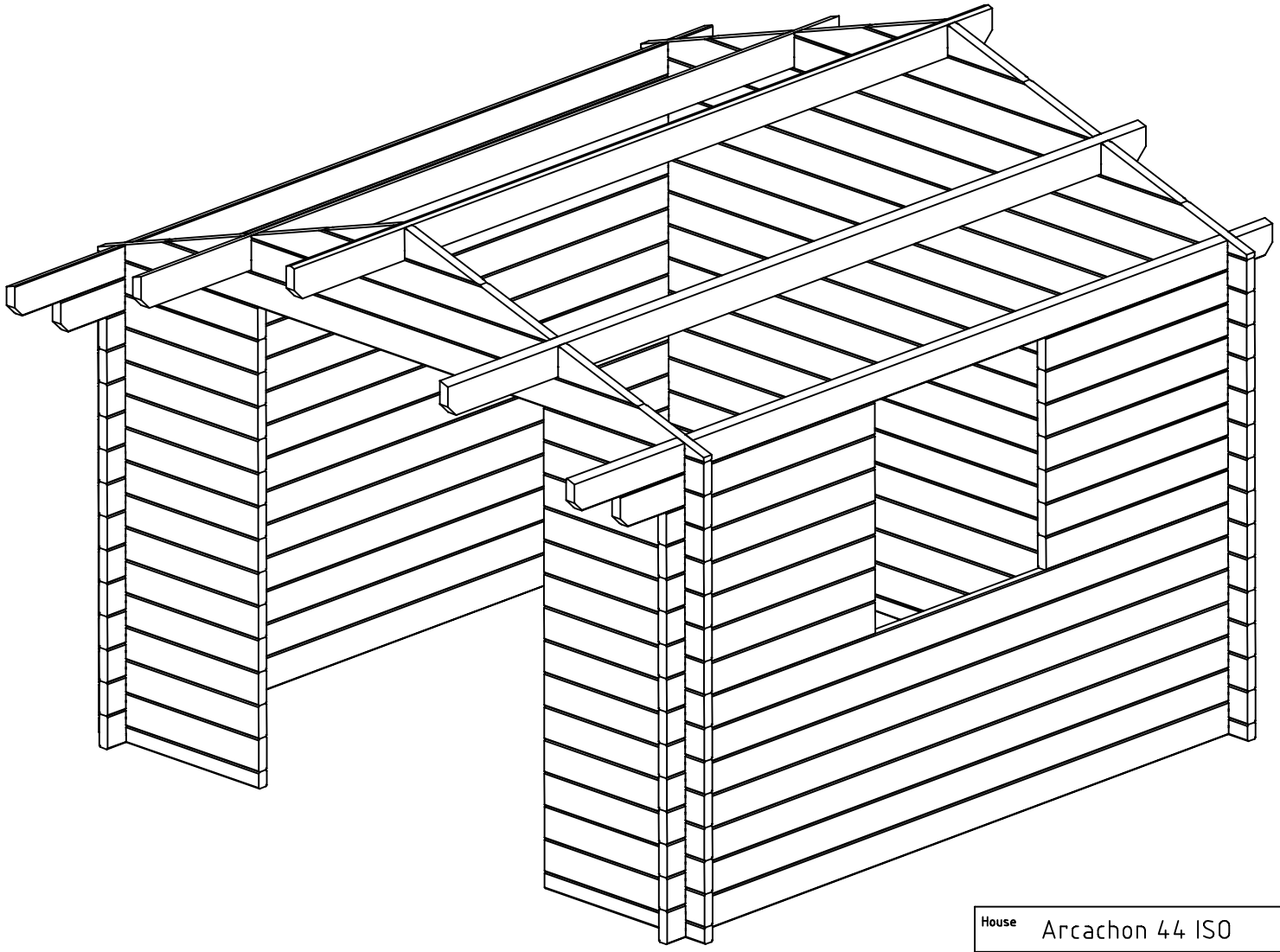

House	Arcachon 44 ISO	Sheet	2
Drawing	3D	Scale	
Material	44x135	Date	27.12.2018
Drawer	RP	File	Arcachon 44 ISO 3D.dwg

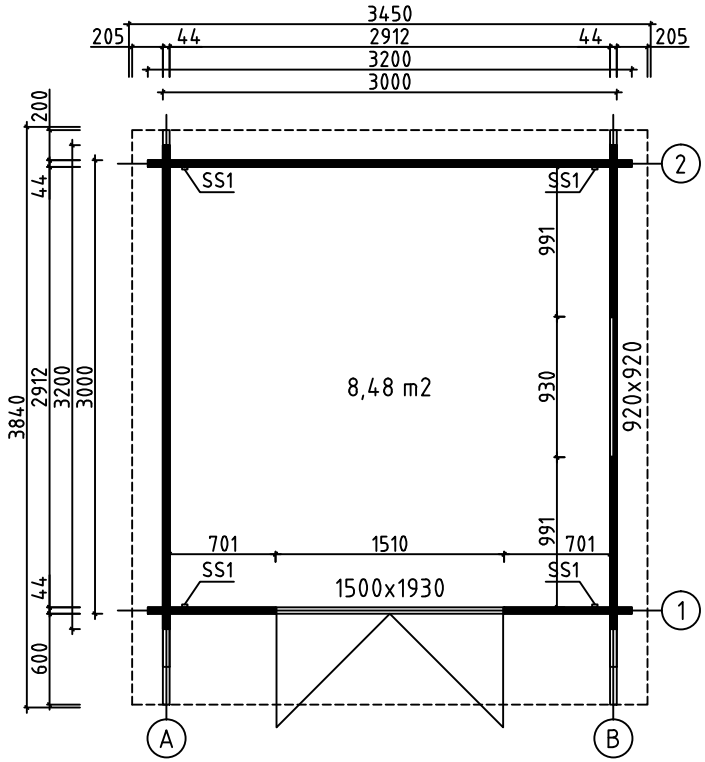

House	Arcachon 44 ISO	Sheet	3
Drawing	GROUNDPLAN	Scale	1:50
Material	44x135	Date	27.12.2018
Drawer	RP	File	Arcachon 44 ISO.dwg

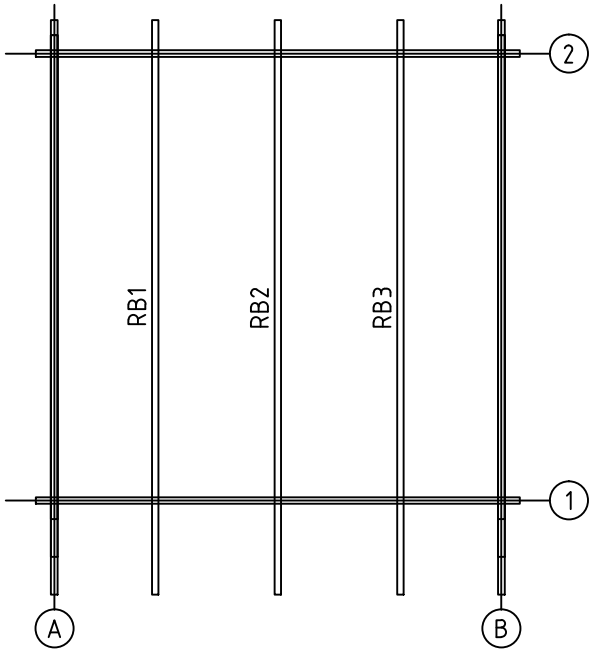

House	Arcachon 44 ISO	Sheet	4
Drawing	ROOFBEAMS	Scale	1:50
Material	43x140	Date	27.12.2018
Drawer	RP	File	Arcachon 44 ISO.dwg

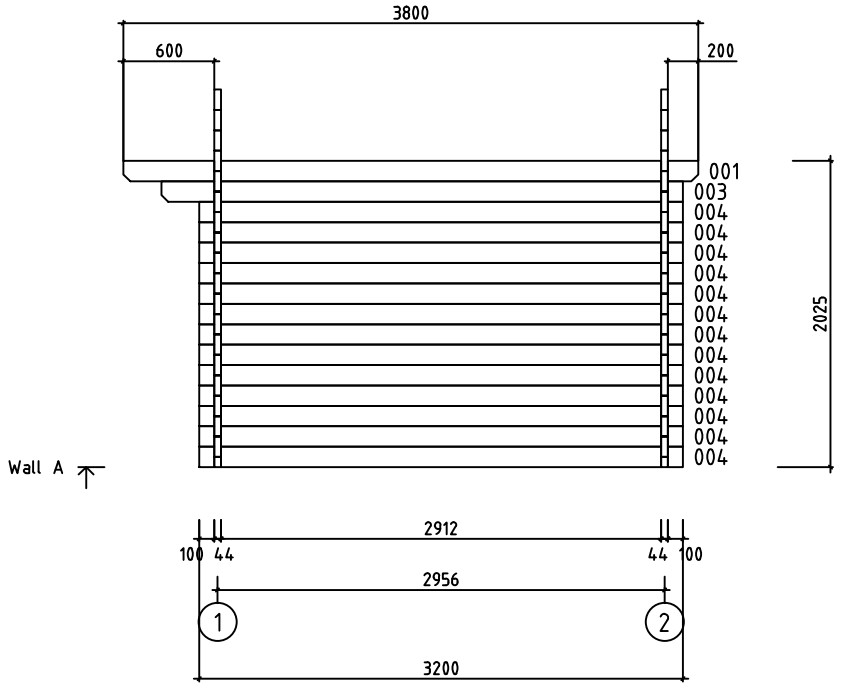

House	Arcachon 44 ISO	Sheet	5
Drawing	WALL A	Scale	1:50
Material	44x135	Date	27.12.2018
Drawer	RP	File	Arcachon 44 ISO.dwg

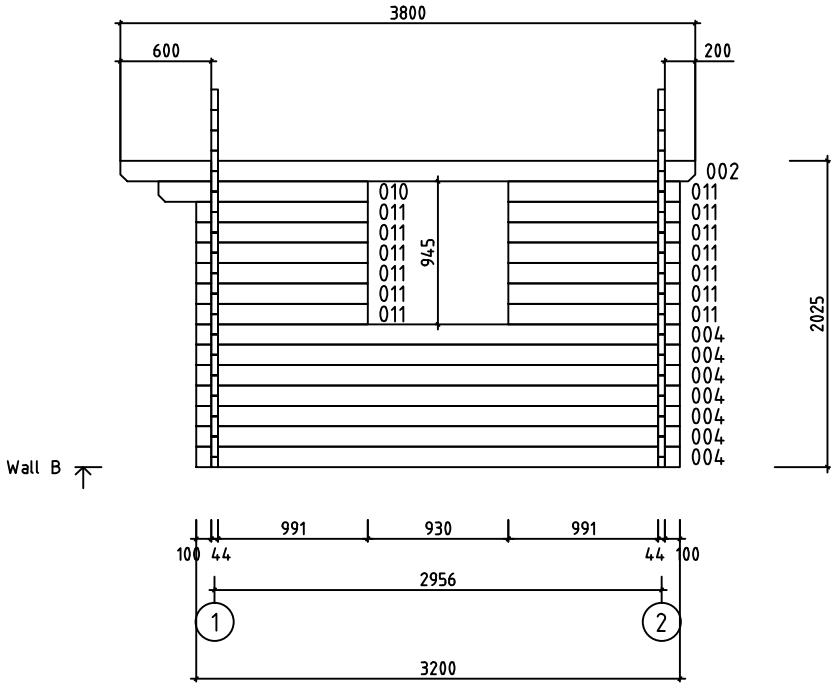

House	Arcachon 44 ISO	Sheet	6
Drawing	WALL B	Scale	1:50
Material	44x135	Date	27.12.2018
Drawer	RP	File	Arcachon 44 ISO.dwg

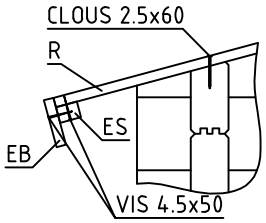

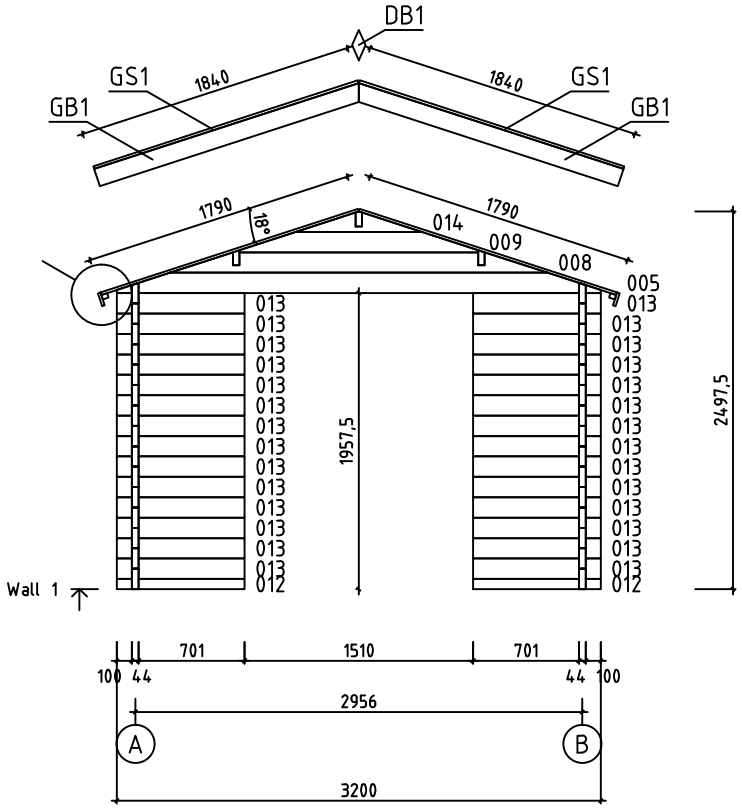

House	Arcachon 44 ISO	Sheet	7
Drawing	WALL 1	Scale	1:50
Material	44x135	Date	27.12.2018
Drawer	RP	File	Arcachon 44 ISO.dwg

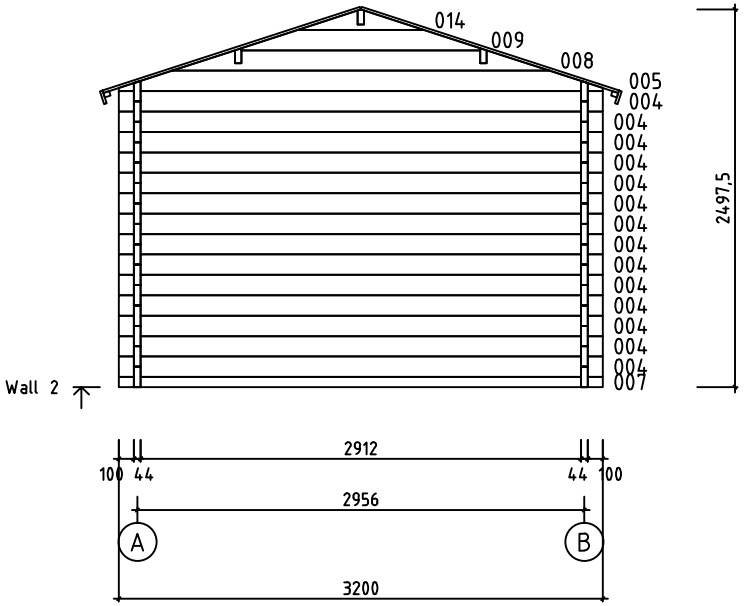

House	Arcachon 44 ISO	Sheet	8
Drawing	WALL 2	Scale	1:50
Material	44x135	Date	27.12.2018
Drawer	RP	File	Arcachon 44 ISO.dwg

Pos	Specification-Bestimmung-Spécification	PCS	Profile (mm)	L (mm)
001	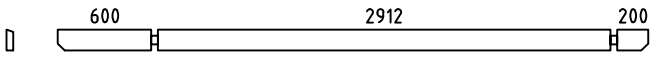	1	44x135	3800
002	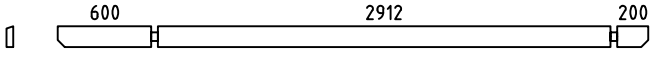	1	44x135	3800
003	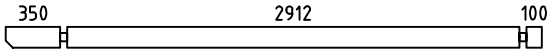	1	44x135	3450
004	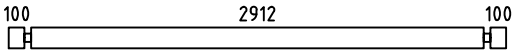	34	44x135	3200
006	SPARE BEAM-ERZATZBOHLE-MADRIER DE RÉSERVE 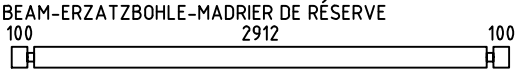	1	44x135	3200
007	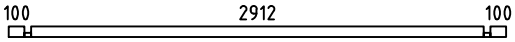	1	44x68	3200
010	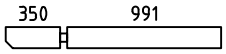	1	44x135	1385
011	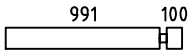	13	44x135	1135
012	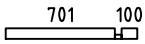	2	44x68	845
013	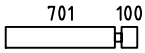	28	44x135	845
W1-1 W2-1	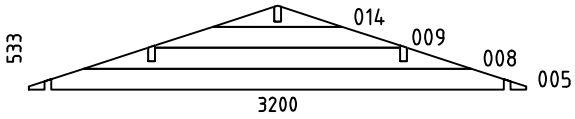	2	44x533	3200
HB	HIT BLOCK-SCHLAGHÖLZER-MADRIERS D´ASSEMBLAGE 	2	44x135	300
RB3	ROOFBEAMS-DACHBALKEN-SOLIVES DE PLAFOND 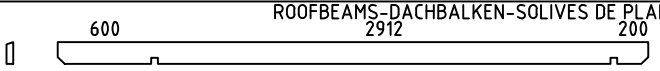	1	43x140	3800
RB1	ROOFBEAMS-DACHBALKEN-SOLIVES DE PLAFOND 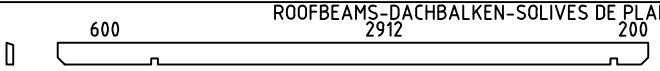	1	43x140	3800
RB2	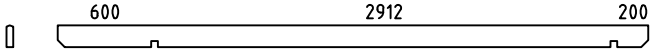	1	43x140	3800
R1	ROOFBOARD-DACHBRETT-VOLIGES  or-oder-ou	68+2 88+2	18x114 18x88	1790
GB1	GABLE BOARD-GIEBELBLENDE-PLANCHE DE RIVE 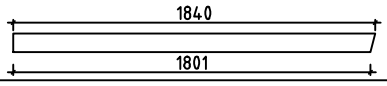	4	18x120	1840
GS1	ROOF FELT FILLET-GIEBELLEISTE-BAGUETTES POUR FIXER LES PLANCHES DE RIVE 	4	18x70	1840
EB1	EAVE BOARD-TRAUFBRETT-LATTES SOUS VOLIGES 	4	18x90	1900
ES1	EAVE SLAT-TRAUFENLEISTE-BAGUETTES POUR FIXER LES LATTES SOUS VOLIGES 	4	30x40	1900
DB1	DIAMOND-RAUTE-ELÉMENTS DE DÉCORATION 	2	18x90	200
SS1	STORM SLAT-STURMLEISTE -BAGUETTE DE TEMPETE TYPE 2	4	18x35	1930
	SCREWS-SCHRAUBEN-VISSER FOR-FÜR-POUR SS1 	8	M8	90
	WASHER-SCHEIBE-RONDELLE FOR-FÜR-POUR SS1 	8	M8	

House Arcachon 44 ISO	Material	File Arcachon 44 ISO.dwg	Sheet 9

Pos	Specification-Bestimmung-Spécification	PCS	Profile (mm)	L (mm)
	NUT-NUSS-ÉCROU FOR-FÜR-POUR SS1 	8	M8	
	NAIL-NAGEL-CLOUS FOR-FÜR-POUR COATING FOR ROOF-BESCHICHTUNG FÜR DACH-REVÉTEMENT DE TOIT 	230	ϕ2.5	20
	NAIL-NAGEL-CLOUS FOR-FÜR-POUR R1	270	ϕ2.5	60
	SCREWS-SCHRAUBEN-VIS FOR-FÜR-POUR GB1, GS1, EB1, ES1, DB1	60	ϕ4.5	50
	SCREWS-SCHRAUBEN-VIS FOR-FÜR-POUR RB1, RB2, RB3 W1-1, W2-1 	22	ϕ6.0	160
	COATING FOR ROOF-BESCHICHTUNG FÜR DACH-REVÉTEMENT DE TOIT 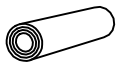	2,0	R = 10m	
	DOUBLEDOOR-DOPPELTÜR-DOUBLE PORTE (left-links-gauche) AST__ISO__PL V	1	1500	1930
	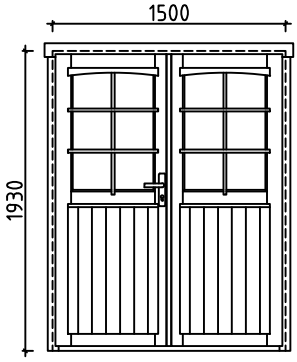			
	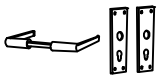	1		
		1		
		1		
		6		
		2		
	WINDOW-FENSTER-FENÉTRE (right-rechts-droit) AST__ISO__KP__AL__PL P	1	920	920
	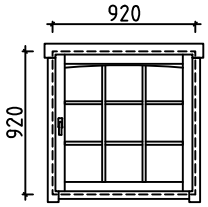			
	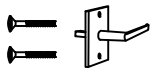	1		
		1		
		1		

House Arcachon 44 ISO	Material	File Arcachon 44 ISO.dwg	Sheet 10

#001	A	3800	1
#002	B	3800	1
#003	A	3450	1
#004	2,A,B	3200	34
#005	1,2	3200	2
#006		3200	1
#007	2	3200	1
#008	1,2	2496	2
#009	1,2	1578	2
#010	B	1385	1
#011	B	1135	13
#012	1	845	2
#013	1	845	28
#014	1,2	832	2