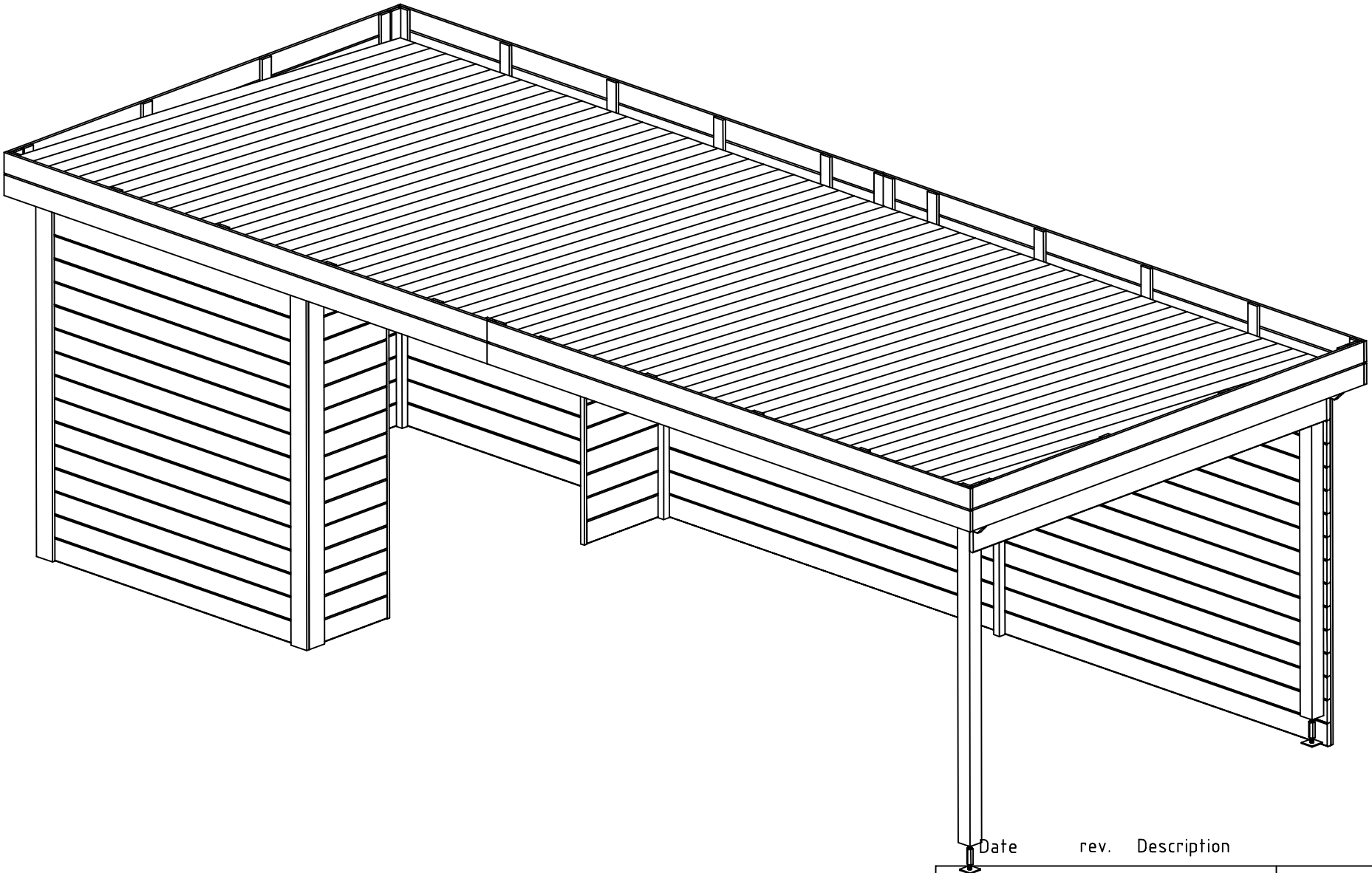

| Date | rev. | Description |
|---|---|---|

| | | | |
|---|---|---|---|
| House | British 28 | Sheet | 1 |
| Drawing | 3D Plan | Scale | |
| Material | 28x135 | Date | 22.11.2023 |
| Drawer | RP | File | British 28 3D.dwg |

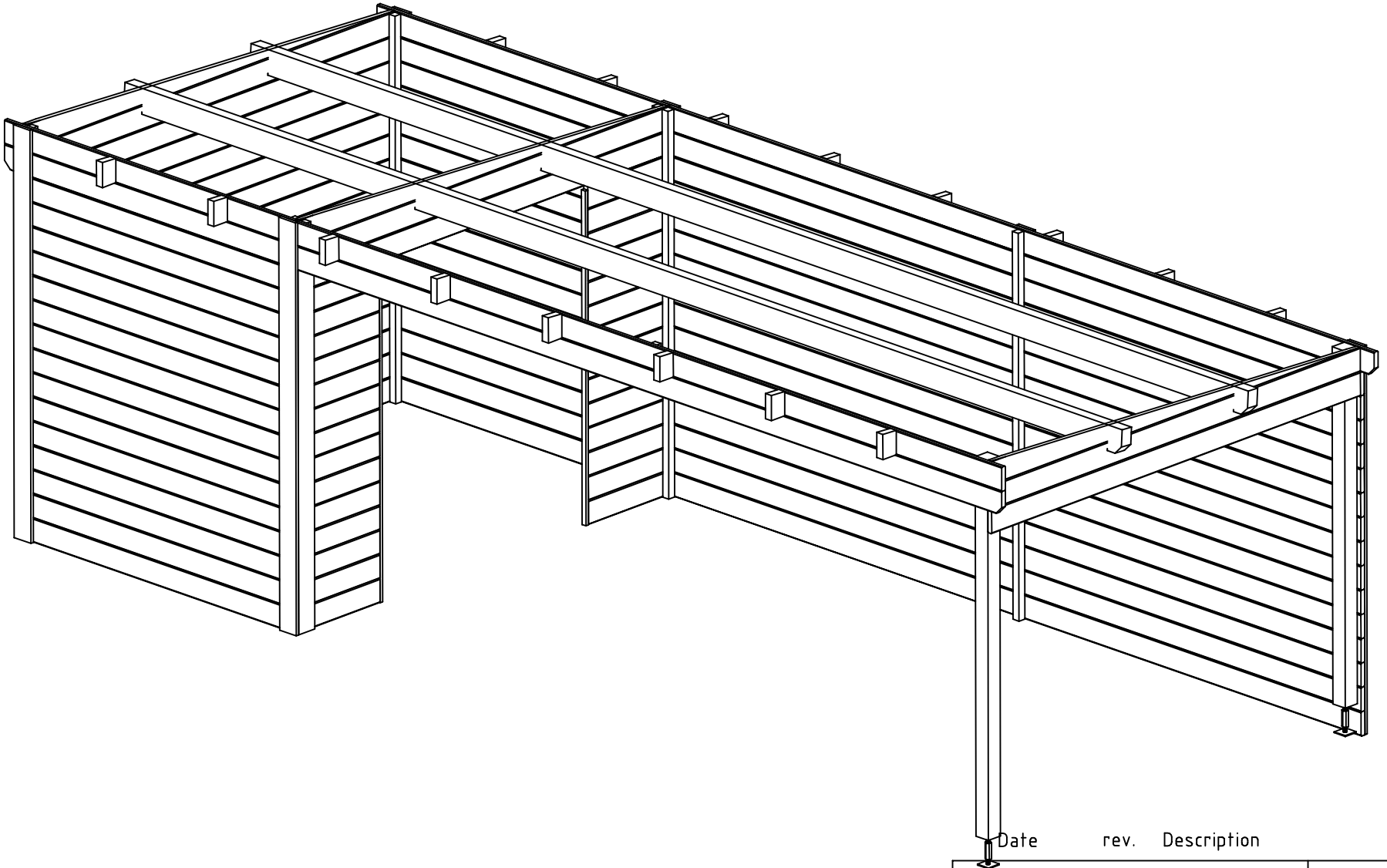

| Date | rev. | Description |
|---|---|---|

| | | | |
|---|---|---|---|
| House | British 28 | Sheet | 2 |
| Drawing | 3D Plan | Scale | |
| Material | 28x135 | Date | 22.11.2023 |
| Drawer | RP | File | British 28 3D.dwg |

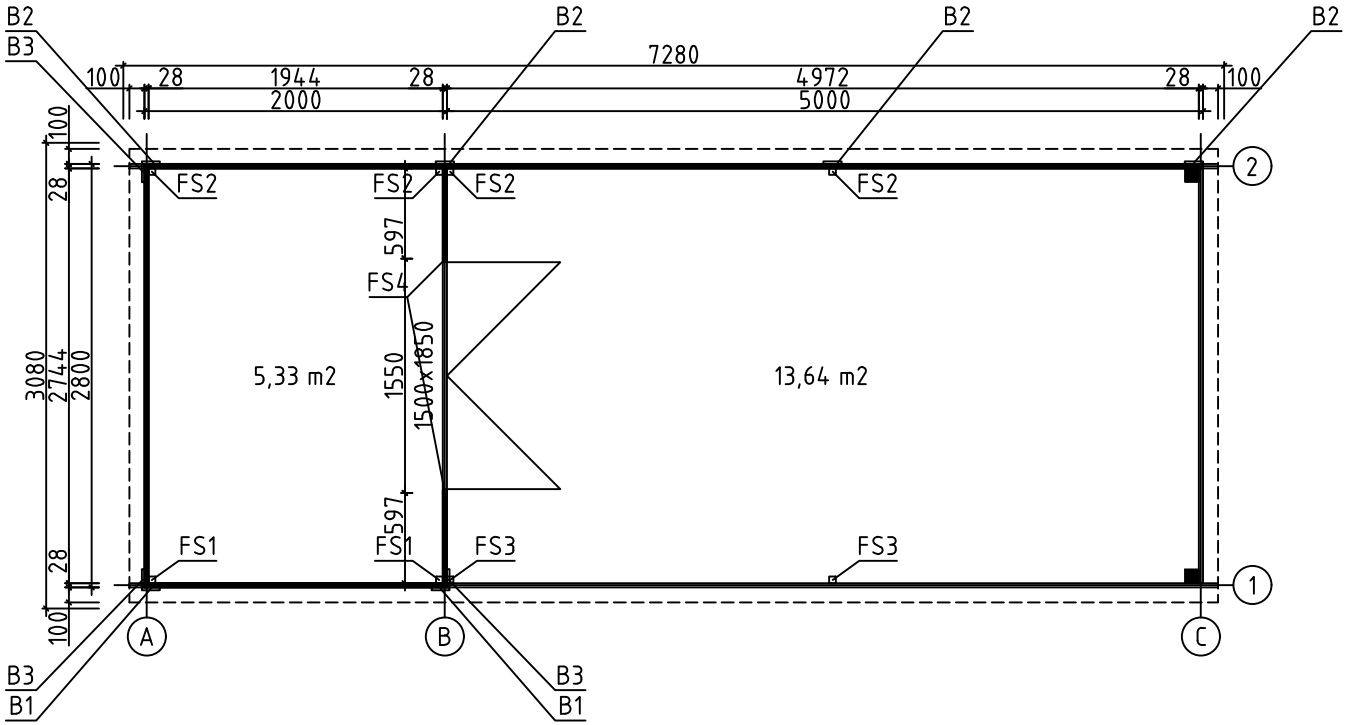


| | | | |
|---|---|---|---|
| House | British 28 | Sheet | 3 |
| Drawing | GROUNDPLAN | Scale | 1:50 |
| Material | 28x135 | Date | 22.11.2023 |
| Drawer | RP | File | British 28.dwg |

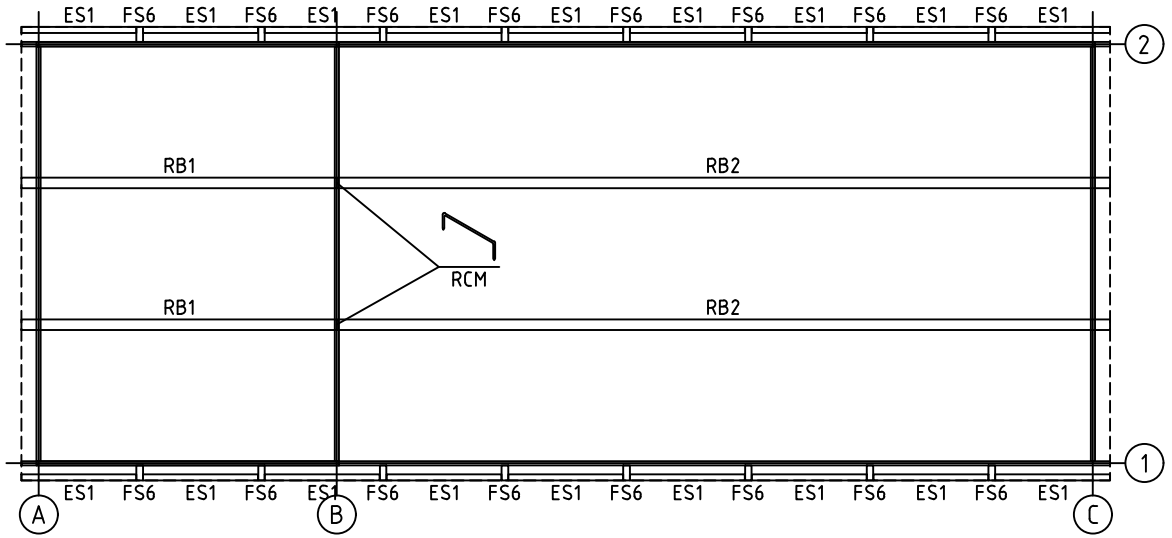


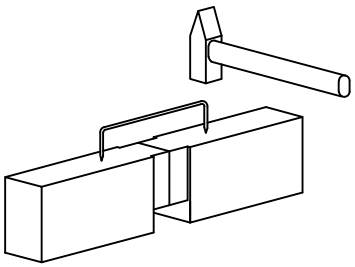

| | | | |
|---|---|---|---|
| House | British 28 | Sheet | 4 |
| Drawing | ROOFBEAMS | Scale | 1:50 |
| Material | 70x140, 43x140, 30x40 | Date | 22.11.2023 |
| Drawer | RP | File | British 28.dwg |

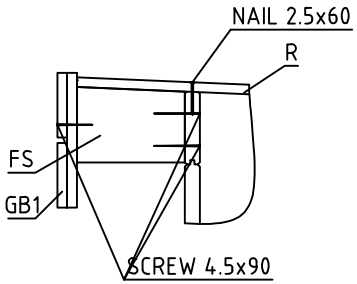


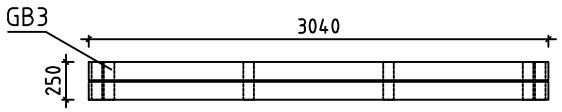


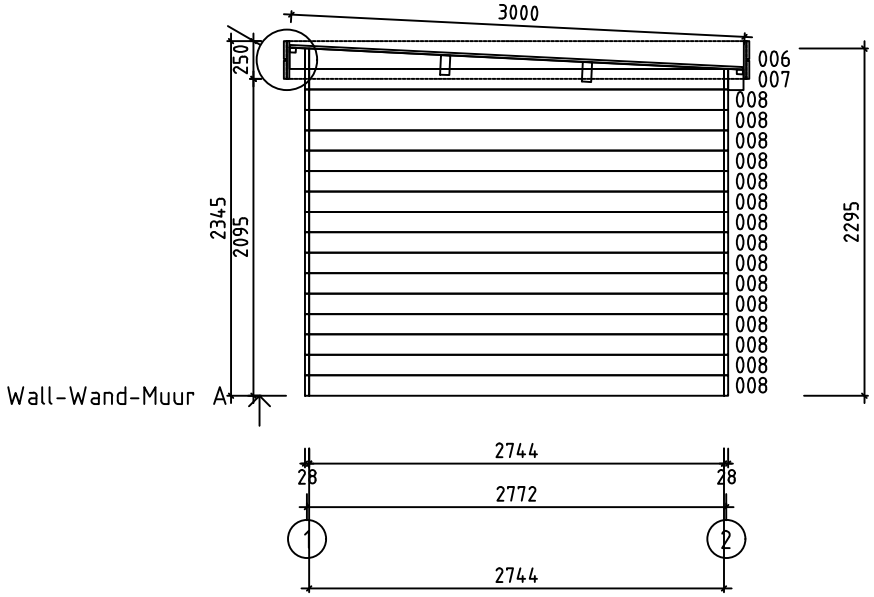


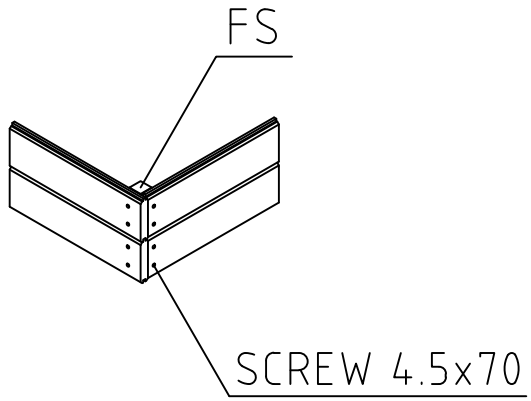


| | | | |
|---|---|---|---|
| House | British 28 | Sheet | 5 |
| Drawing | WALL-WAND-MUUR A | Scale | 1:50 |
| Material | 28x135 | Date | 22.11.2023 |
| Drawer | RP | File | British 28.dwg |

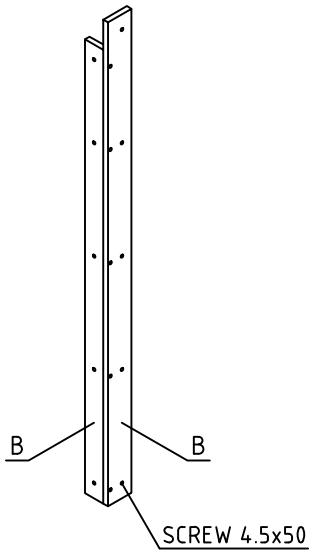


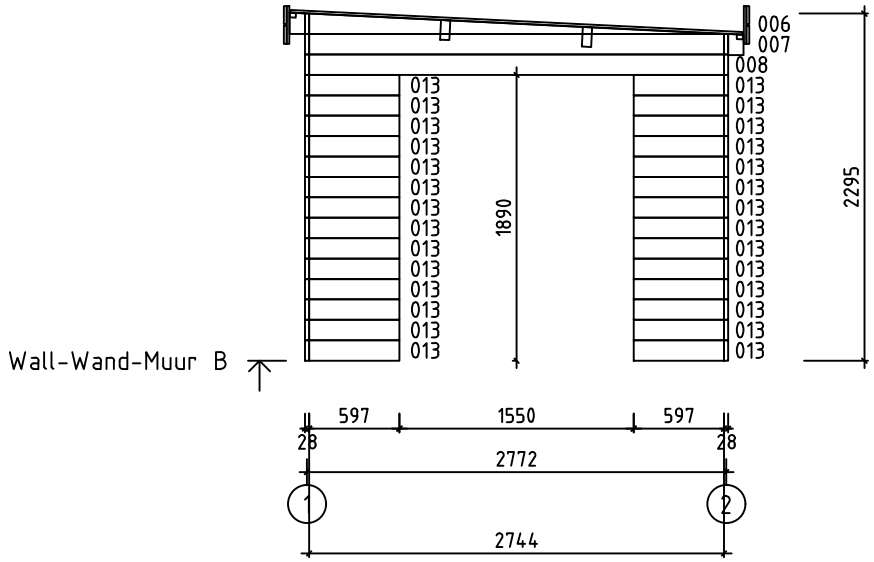


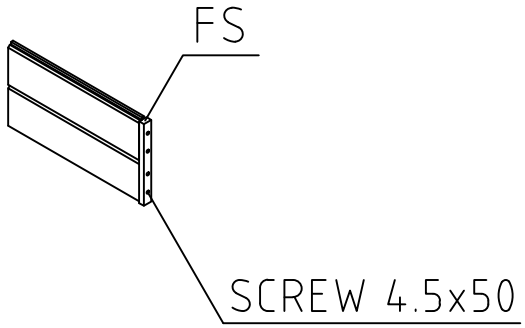


| | | | |
|---|---|---|---|
| House | British 28 | Sheet | 6 |
| Drawing | WALL-WAND-MUUR B | Scale | 1:50 |
| Material | 28x135 | Date | 22.11.2023 |
| Drawer | RP | File | British 28.dwg |

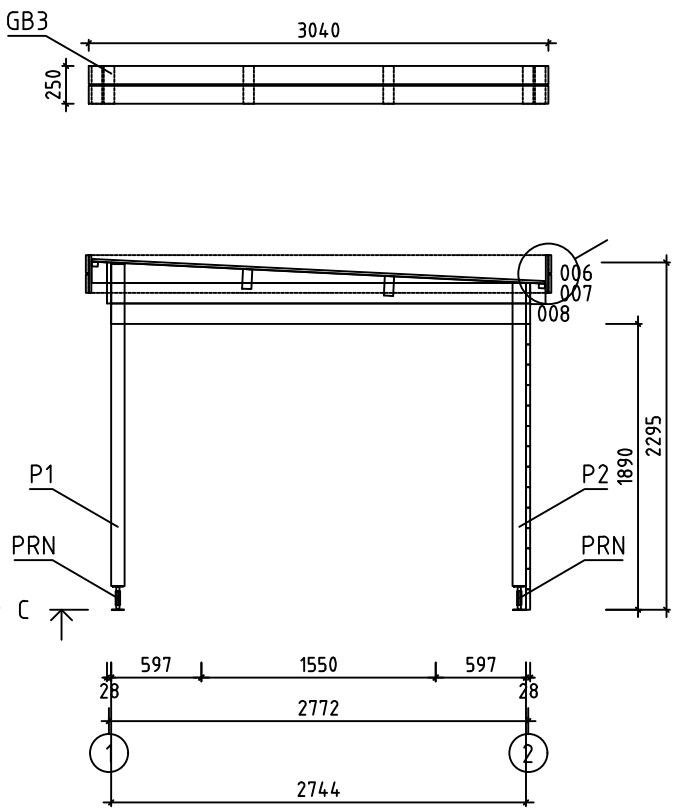


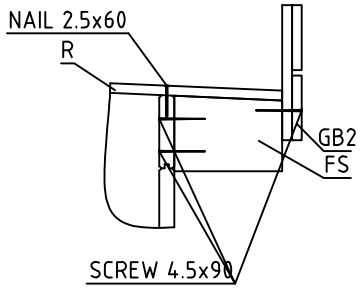


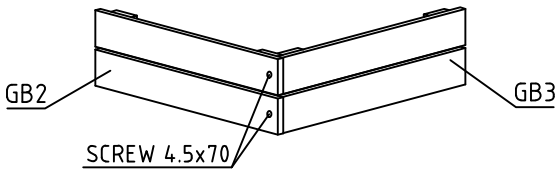


| | | | |
|---|---|---|---|
| House | British 28 | Sheet | 7 |
| Drawing | WALL-WAND-MUUR C | Scale | 1:50 |
| Material | 28x135 | Date | 22.11.2023 |
| Drawer | RP | File | British 28.dwg |

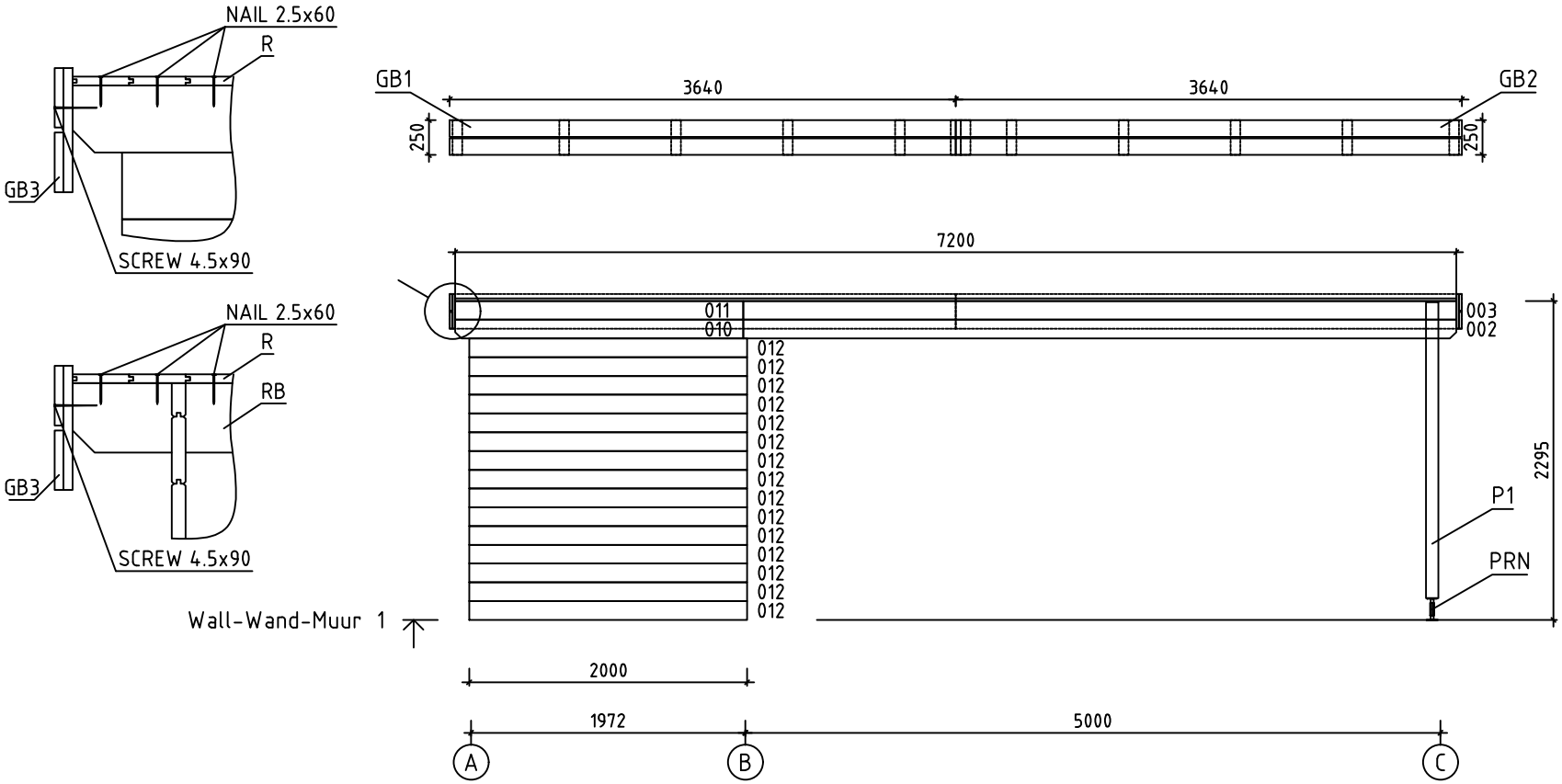


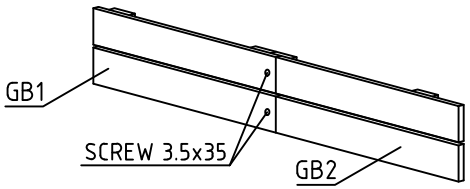


| | | | |
|---|---|---|---|
| House | British 28 | Sheet | 8 |
| Drawing | WALL-WAND-MUUR 1 | Scale | 1:50 |
| Material | 28x135 | Date | 22.11.2023 |
| Drawer | RP | File | British 28.dwg |

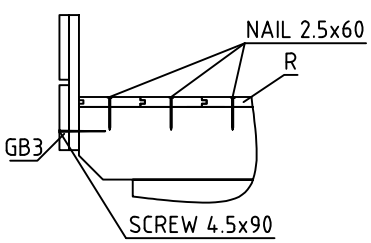


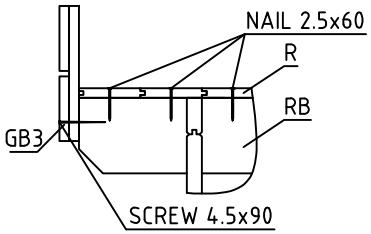


Wall-Wand-Muur 2

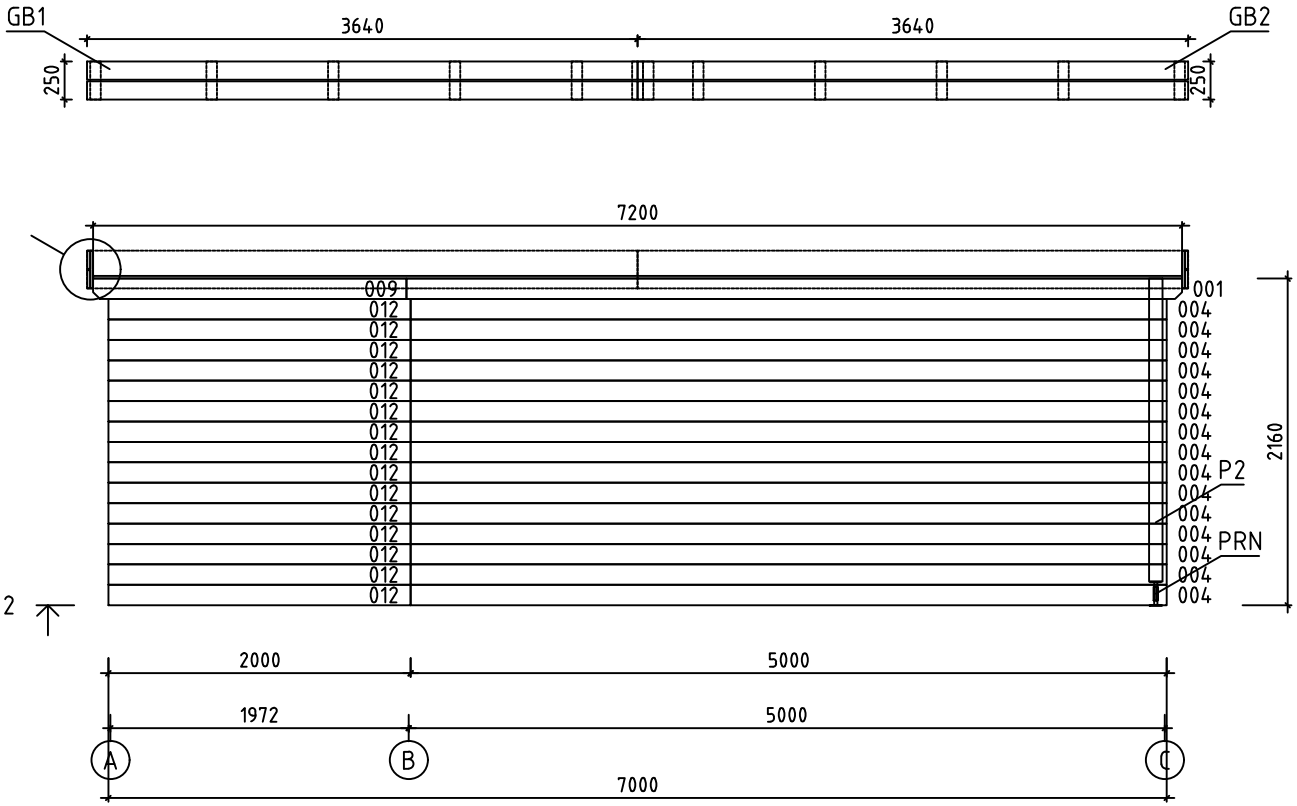


| | | | |
|---|---|---|---|
| House | British 28 | Sheet | 9 |
| Drawing | WALL-WAND-MUUR 2 | Scale | 1:50 |
| Material | 28x135 | Date | 22.11.2023 |
| Drawer | RP | File | British 28.dwg |

| Pos | Specification-Bestimmung-Spécification | PCS | Profile (mm) | L (mm) |
|---|---|---|---|---|
| 001 | PM | 1 | 28x135 | 5128 |
| 002 | | 1 | 28x135 | 5128 |
| 003 | PM | 1 | 28x135 | 5128 |
| 004 | | 15 | 28x135 | 5000 |
| 005 | SPARE BEAM-ERZATZBOHLE-MADRIER DE RÉSERVE | 1 | 28x135 | 5000 |
| 008 | | 17 | 28x135 | 2744 |
| 009 | PM | 1 | 28x135 | 2072 |
| 010 | | 1 | 28x135 | 2072 |
| 011 | PM | 1 | 28x135 | 2072 |
| 012 | | 30 | 28x135 | 2000 |
| 013 | | 28 | 28x135 | 597 |
| WB-1<br>WA-1<br>WC-1 | 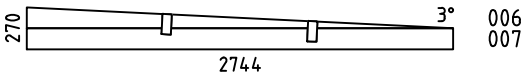 | 3 | 28x270 | 2744 |
| HB | HIT BLOCK-SCHLAGHÖLZER-MADRIERS D´ASSEMBLAGE  | 2 | 28x135 | 300 |
| FS5 | FIXING SLAT-BEFESTIGUNGSLEISTE-SUPPORTS EXTENSION TOITURE | 16 | 43x140 | 100 |
| FS1 | CORNER STUD-ECKPFOSTEN-POTEAUX<br>D´ANGLE POUR FIXATION DES MADRIERS | 2 | 43x43 | 2285 |
| FS2 | CORNER STUD-ECKPFOSTEN-POTEAUX<br>D´ANGLE POUR FIXATION DES MADRIERS | 4 | 43x43 | 2155 |
| FS3 | CORNER STUD-ECKPFOSTEN-POTEAUX<br>D´ANGLE POUR FIXATION DES MADRIERS | 2 | 43x43 | 260 |
| FS4 | FIXING FILLET-FIXIRUNGSLEISTE-PROFIL DE FIXATION | 2 | 28x18 | 1990 |
| P1 | POST-PFOSTEN-POTEAU | 1 | 90x90 | 2130 |
| P2 | POST-PFOSTEN-POTEAU | 1 | 90x90 | 2005 |
| B1 | CORNER FILLET-DECKLEISTE-PROFILS DE FINITION<br>ANGLES A L´EXTERIEUR | 2 | 18x120 | 2295 |
| B2 | CORNER FILLET-DECKLEISTE-PROFILS DE FINITION<br>ANGLES A L´EXTERIEUR | 4 | 18x120 | 2160 |
| B3 | CORNER FILLET-DECKLEISTE-PROFILS DE FINITION<br>ANGLES A L´EXTERIEUR | 3 | 18x120 | 2025 |
| RB2 | ROOFBEAMS-DACHBALKEN-SOLIVES DE PLAFOND<br>4972<br>100 | 2 | 70x140 | 5114 |
| RB1 | ROOFBEAMS-DACHBALKEN-SOLIVES DE PLAFOND<br>100<br>1944 | 2 | 70x140 | 2086 |

| House British 28 | Material | File British 28.dwg | Sheet 10 |
|---|---|---|---|

| Pos | Specification-Bestimmung-Spécification | PCS | Profile (mm) | L (mm) |
|---|---|---|---|---|
| R1 | ROOFBOARD-DACHBRETT-VOLIGES  or-oder-ou | 64+1<br>83+1 | 18x114<br>18x88 | 3000 |
| GB1 | ASSEMBLY REQUIRED-MONTAGE ERFORDERLICH-ASSEMBLAGE REQUIS 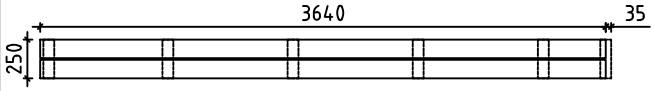  | 2 | 36x250 | 3640<br>+35 |
| GB2 | ASSEMBLY REQUIRED-MONTAGE ERFORDERLICH-ASSEMBLAGE REQUIS   | 2 | 36x250 | 3640 |
| GB3 | ASSEMBLY REQUIRED-MONTAGE ERFORDERLICH-ASSEMBLAGE REQUIS 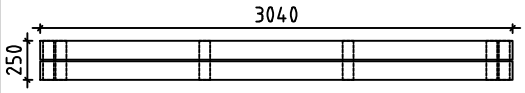  | 2 | 36x250 | 3040 |
| ES1 | EAVE SLAT-TRAUFENLEISTE-BAGUETTES POUR FIXER LES LATTES SOUS VOLIGES  | 18 | 30x40 | 760 |
| PRN | POST REGULATOR-PFOSTEN REGLER-<br>PIED MÉTALLIQUE RÉGLABLE POUR POTEAU  | 2 | | |
| RCM | ROOFBEAMS CONNECTING METAL-DACHBALKEN BEFESTIGUNGSMETALLE<br>-CONNECTEUR MÉTALLIQUE POUR SOLIVES DE PLAFOND  | 2 | ⌀6.0 | 200 |
| | NAIL-NAGEL-CLOUS<br>FOR-FÜR-POUR COATING FOR ROOF-BESCHICHTUNG<br>FÜR DACH-REVÉTEMENT DE TOIT  | 360 | ⌀2.5 | 20 |
| | NAIL-NAGEL-CLOUS<br>FOR-FÜR-POUR R1  | 340 | ⌀2.5 | 60 |
| | SCREWS-SCHRAUBEN-VIS<br>FOR-FÜR-POUR GB1, GB2, GB3  | 148 | ⌀3.5 | 35 |
| | SCREWS-SCHRAUBEN-VIS<br>FOR-FÜR-POUR PRN  | 16 | ⌀6.0 | 45 |
| | SCREWS-SCHRAUBEN-VIS<br>FOR-FÜR-POUR P1, P2<br>FS4, B1, B2, B3, ES1  | 190 | ⌀4.5 | 50 |
| | SCREWS-SCHRAUBEN-VIS<br>FOR-FÜR-POUR GB1, GB2, GB3<br>FS1, FS2, FS3, P1, P2  | 400 | ⌀4.5 | 70 |
| | SCREWS-SCHRAUBEN-VIS<br>FOR-FÜR-POUR GB1, GB2, GB3, FS5  | 60 | ⌀4.5 | 90 |
| | SCREWS-SCHRAUBEN-VIS<br>FOR-FÜR-POUR WA-1, WB-1, WC-1, RB1, RB2  | 30 | ⌀6.0 | 160 |
| | COATING FOR ROOF-BESCHICHTUNG FÜR DACH-REVÉTEMENT DE TOIT 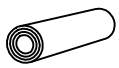 | 2,0 | R = 15m | |
| | DOUBLEDOOR-DOPPELTÜR-DOUBLE PORTE (right-rechts-droit) AST__PL P 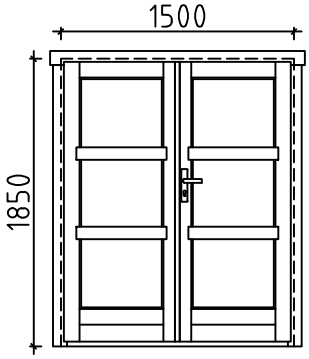  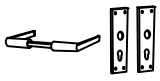     | 1<br>1<br>1<br>1<br>6<br>2 | 1500 | 1850 |

| House British 28 | Material | File British 28.dwg | Sheet 11 |
|---|---|---|---|

| Pos | Assembly Instructions-Montageanleitungen-Instructions de Montage | PCS | Profile (mm) | L (mm) |
|---|---|---|---|---|
| L1 | BOARD-BRETT-PLANCHE | 8 | 18x120 | 3640 |
| L2 | BOARD-BRETT-PLANCHE | 4 | 18x120 | 3040 |
| L3 | BOARD-BRETT-PLANCHE | 36 | 18x70 | 250 |

GB1 — 2 — 36x250 — 3640 +35

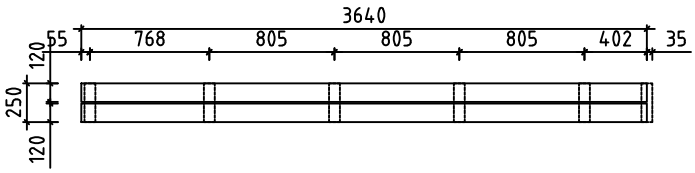


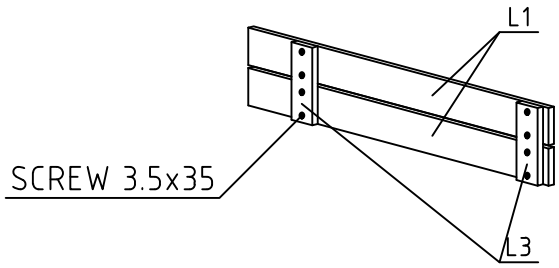


GB2 — 2 — 36x250 — 3640

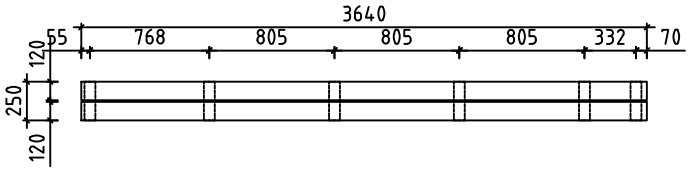


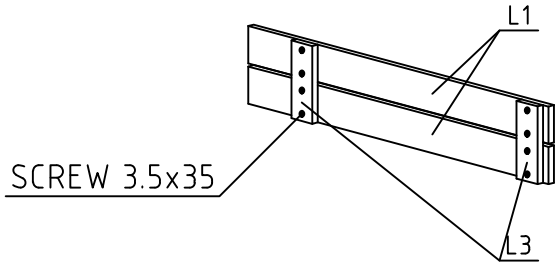


GB3 — 2 — 36x250 — 3040

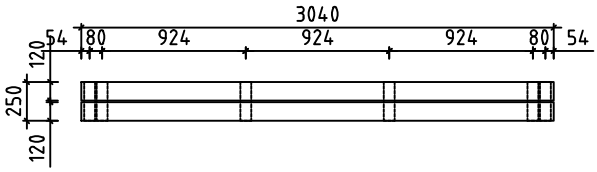


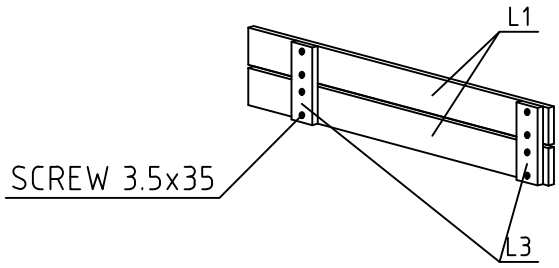


| House British 28 | Material | File British 28.dwg | Sheet 12 |
|---|---|---|---|

| | | | |
|---|---|---|---|
| #001 | 2 | 5128 | 1 |
| #002 | 1 | 5128 | 1 |
| #003 | 1 | 5128 | 1 |
| #004 | 2 | 5000 | 15 |
| #005 | | 5000 | 1 |
| #006 | A,B,C | 2744 | 3 |
| #007 | A,B,C | 2744 | 3 |
| #008 | A,B,C | 2744 | 17 |
| #009 | 2 | 2072 | 1 |
| #010 | 1 | 2072 | 1 |
| #011 | 1 | 2072 | 1 |
| #012 | 1,2 | 2000 | 30 |
| #013 | B | 597 | 28 |