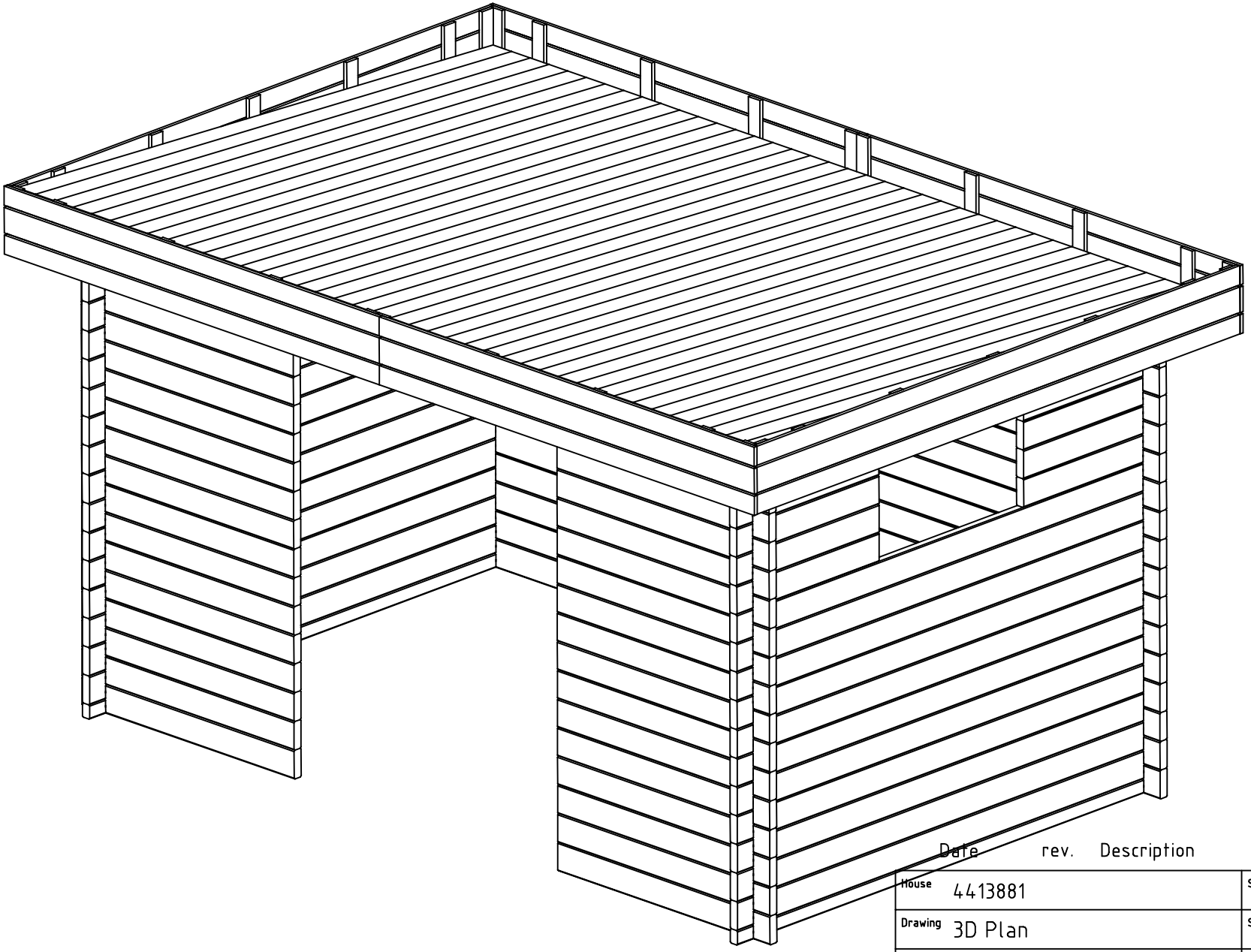

Date	rev.	Description

House	4413881	Sheet	1
Drawing	3D Plan	Scale	
Material	44x135	Date	05.01.2024
Drawer	RP	File	4413881 3D.dwg

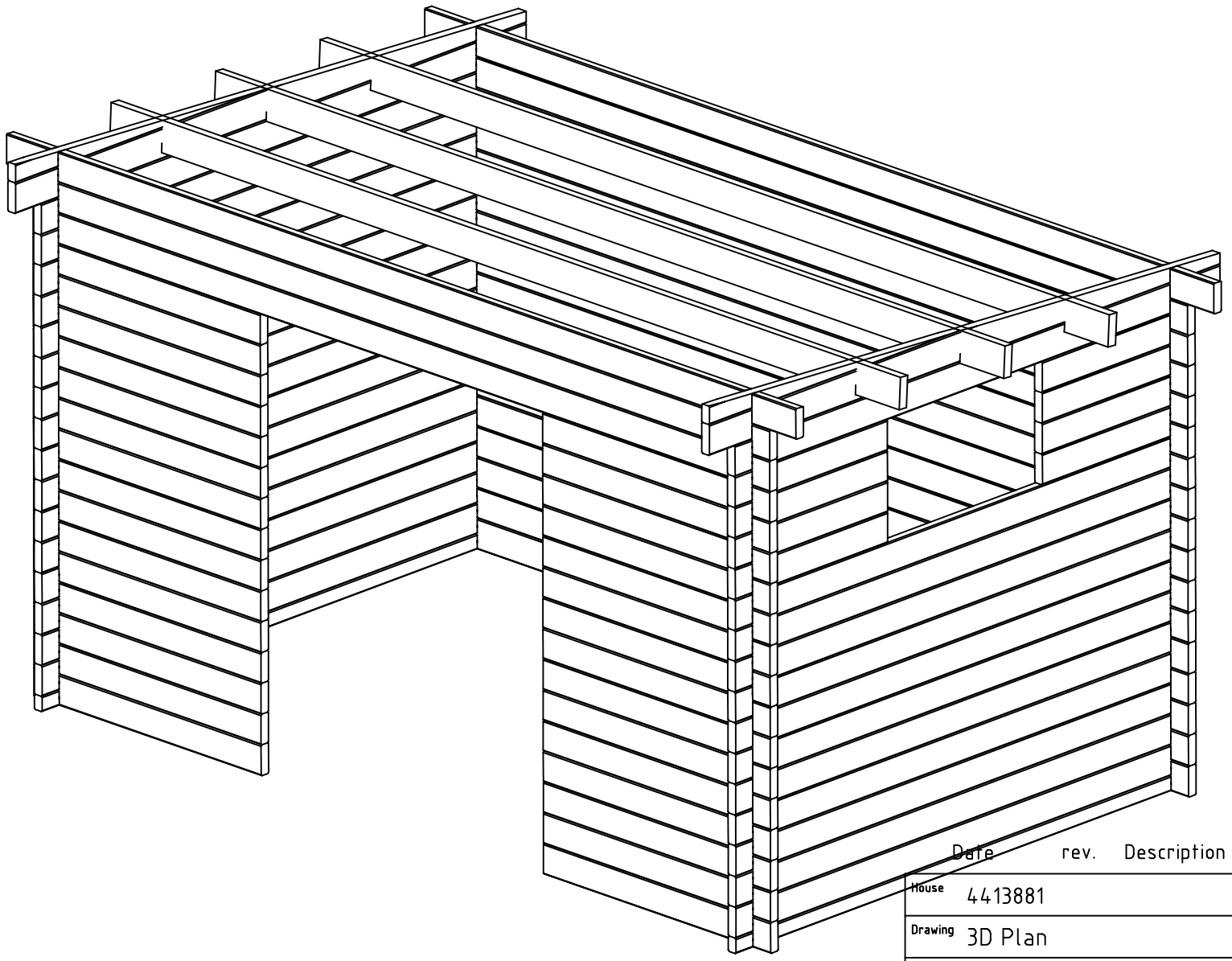

Date	rev.	Description

House	4413881	Sheet	2
Drawing	3D Plan	Scale	
Material	44x135	Date	05.01.2024
Drawer	RP	File	4413881 3D.dwg

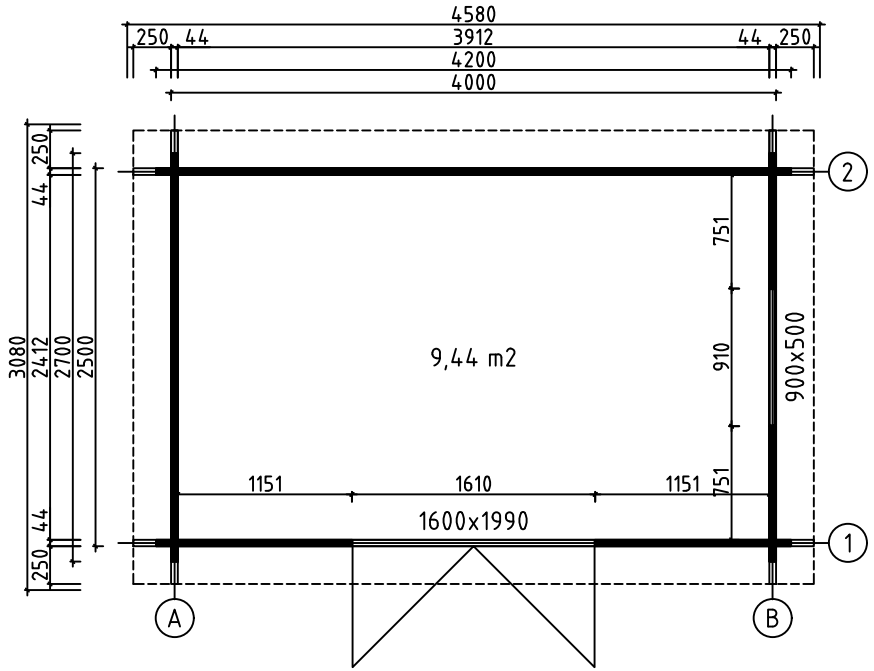

House	4413881	Sheet	3
Drawing	GROUNDPLAN	Scale	1:50
Material	44x135	Date	05.01.2024
Drawer	RP	File	4413881.dwg

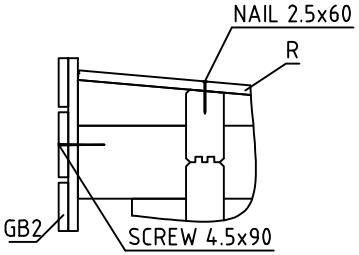

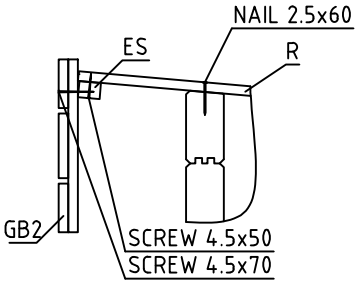

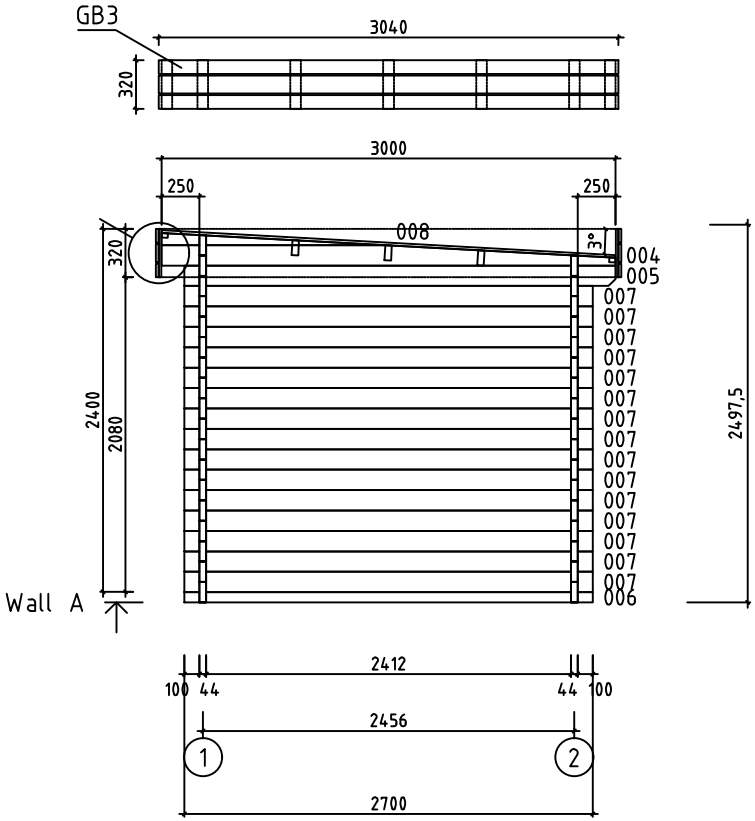

House	4413881	Sheet	4
Drawing	WALL A	Scale	1:50
Material	44x135	Date	05.01.2024
Drawer	RP	File	4413881.dwg

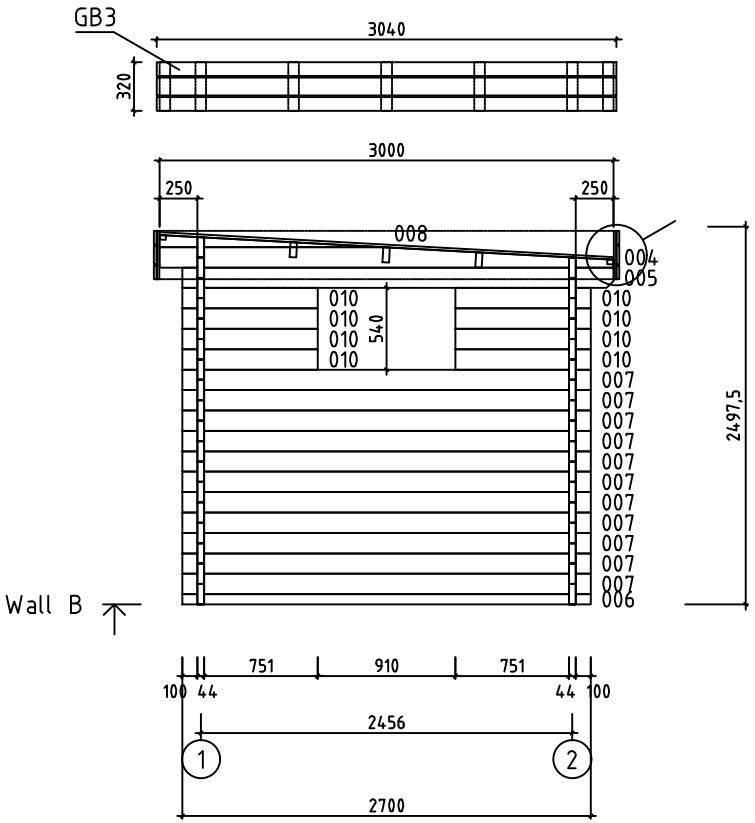

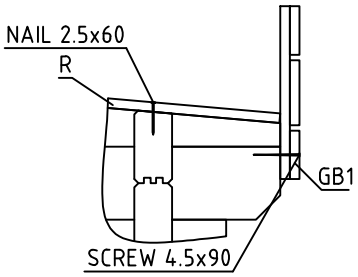

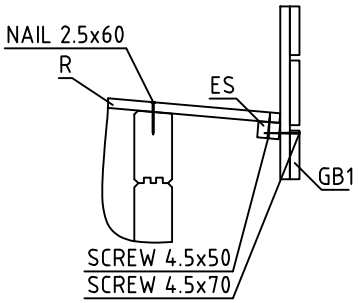

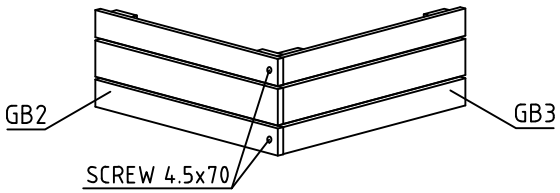

House	4413881	Sheet	5
Drawing	WALL B	Scale	1:50
Material	44x135	Date	05.01.2024
Drawer	RP	File	4413881.dwg

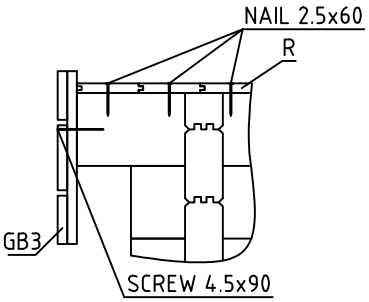

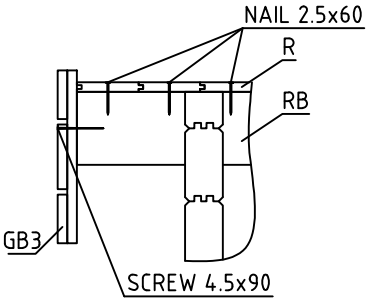

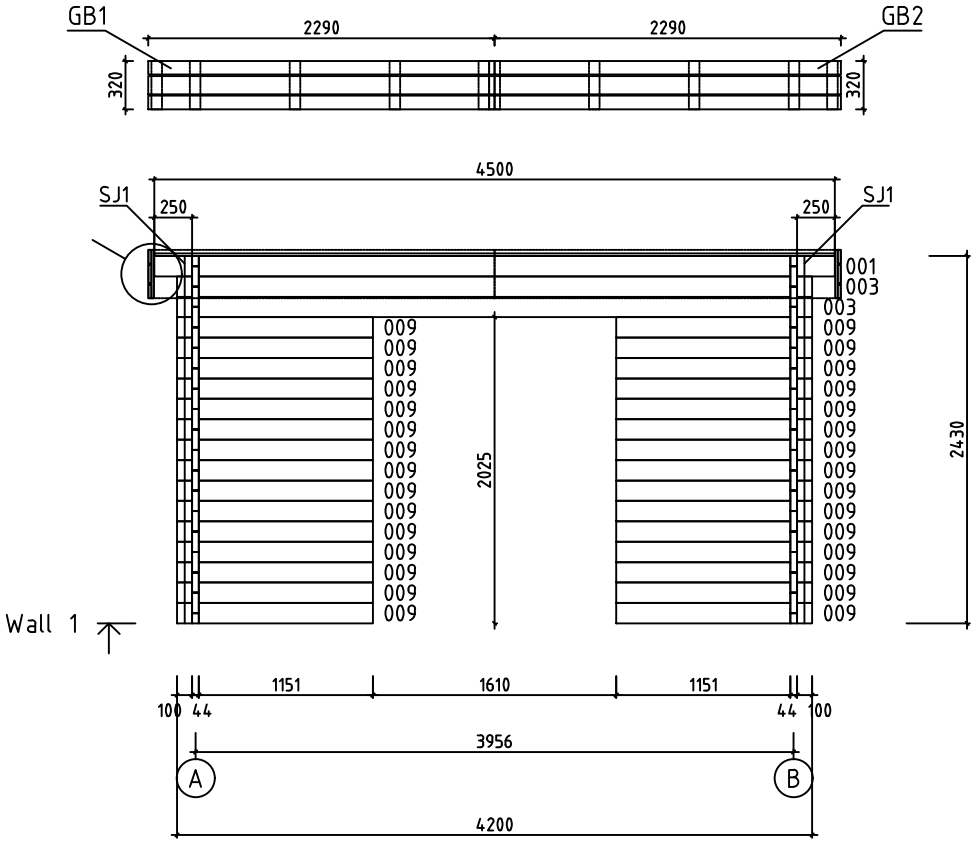

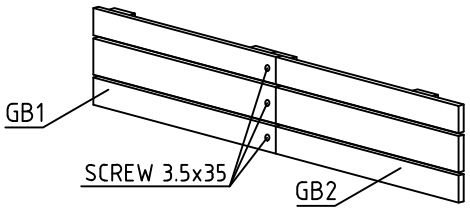

House	4413881	Sheet	6
Drawing	WALL 1	Scale	1:50
Material	44x135	Date	05.01.2024
Drawer	RP	File	4413881.dwg

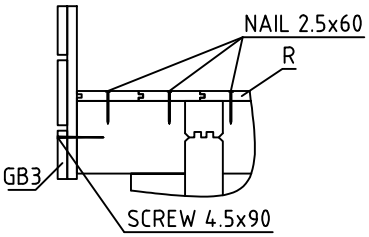

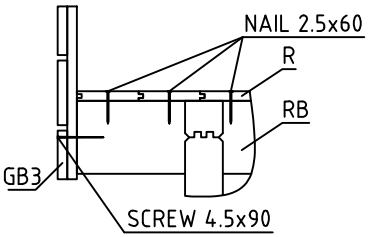

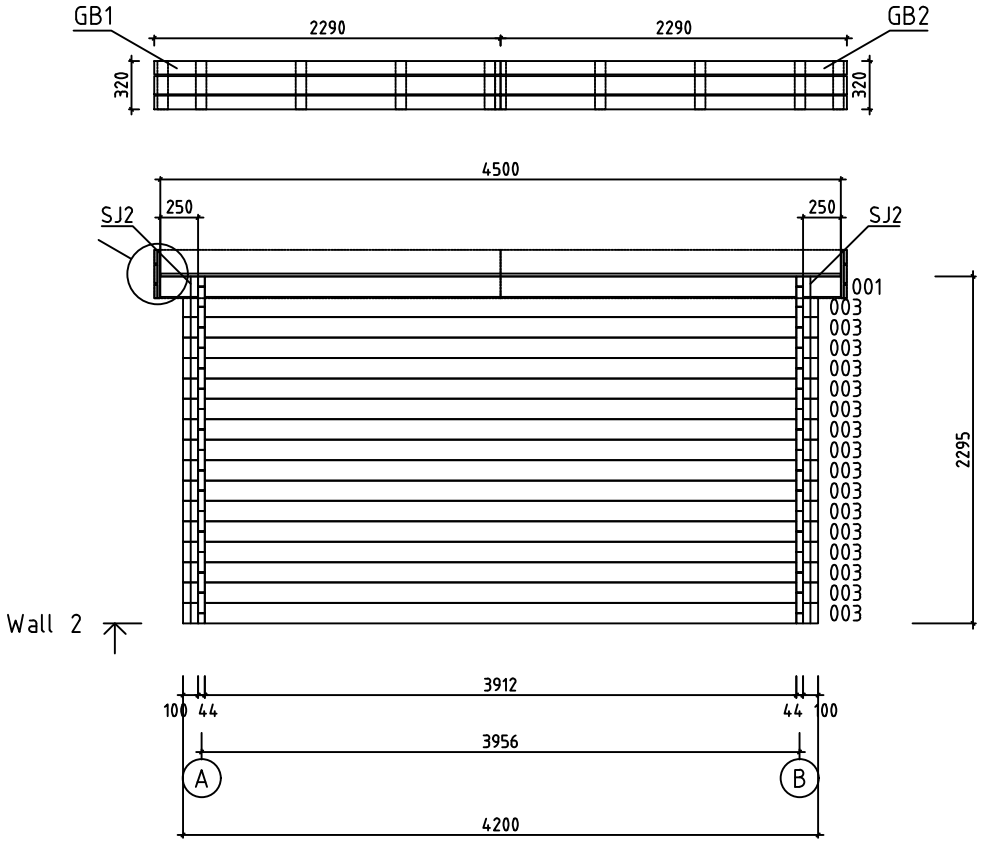

House	4413881	Sheet	7
Drawing	WALL 2	Scale	1:50
Material	44x135	Date	05.01.2024
Drawer	RP	File	4413881.dwg

Pos	Specification-Bestimmung-Spécification	PCS	Profile (mm)	L (mm)
001	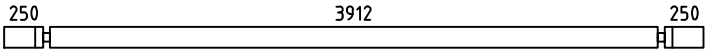	2	44x135	4500
002	SPARE BEAM-ERZATZBOHLE-MADRIER DE RÉSERVE 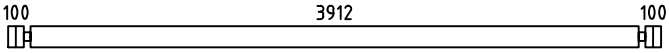	1	44x135	4200
003	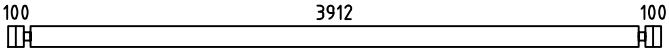	18	44x135	4200
006	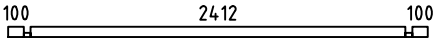	2	44x68	2700
007	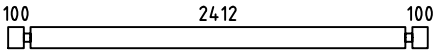	26	44x135	2700
009	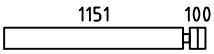	30	44x135	1295
010	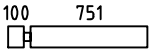	8	44x135	895
WA-1 WB-1	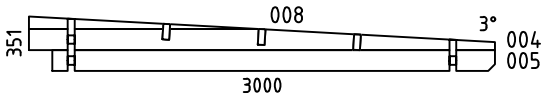	2	44x351	3000
HB	HIT BLOCK-SCHLAGHÖLZER-MADRIERS D´ASSEMBLAGE 	2	44x135	300
RB1	ROOFBEAMS-DACHBALKEN-SOLIVES DE PLAFOND 	3	43x140	4500
F1	FLOORBOARD-FUSSBODENBRETT-PLANCHER  or-oder-ou	40+1 52+1	18x114 18x88	3000
GB1	ASSEMBLY REQUIRED-MONTAGE ERFORDERLICH-ASSEMBLAGE REQUIS 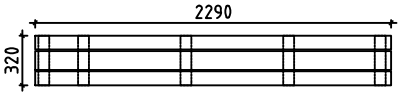	2	36x320	2290
GB2	ASSEMBLY REQUIRED-MONTAGE ERFORDERLICH-ASSEMBLAGE REQUIS 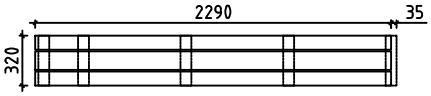	2	36x320	2290 +35
GB3	ASSEMBLY REQUIRED-MONTAGE ERFORDERLICH-ASSEMBLAGE REQUIS 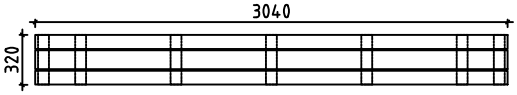	2	36x320	3040
ES1	EAVE SLAT-TRAUFENLEISTE-BAGUETTES POUR FIXER LES LATTES SOUS VOLIGES 	4	30x40	1955
ES2	EAVE SLAT-TRAUFENLEISTE-BAGUETTES POUR FIXER LES LATTES SOUS VOLIGES 	4	30x40	250
SJ1	SCREW JOINT-GEWINDESTANGE -TIGES FILETÉS 	2	M10	2460
SJ2	SCREW JOINT-GEWINDESTANGE -TIGES FILETÉS	2	M10	2320
	NAIL-NAGEL-CLOUS FOR-FÜR-POUR R1	270	⌀2.5	60
	SCREWS-SCHRAUBEN-VIS FOR-FÜR-POUR GB1, GB2, GB3	210	⌀3.5	35
	SCREWS-SCHRAUBEN-VIS FOR-FÜR-POUR ES1, ES2	30	⌀4.5	50

House 4413881	Material	File 4413881.dwg	Sheet 8

Pos	Specification-Bestimmung-Spécification	PCS	Profile (mm)	L (mm)
	SCREWS-SCHRAUBEN-VIS FOR-FÜR-POUR GB1, GB2, GB3 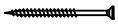	20	ϕ4.5	70
	SCREWS-SCHRAUBEN-VIS FOR-FÜR-POUR GB1, GB2, GB3 	20	ϕ4.5	90
	SCREWS-SCHRAUBEN-VIS FOR-FÜR-POUR WA-1, WB-1, RB1 	20	ϕ6.0	160
	DOUBLEDOOR-DOPPELTÜR-DOUBLE PORTE (right-rechts-droit) AST_ISO_PL P 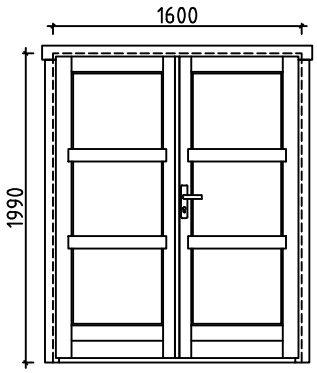	1	1600	1990
		1		
		1		
		1		
		6		
		4		
	WINDOW-FENSTER-FENÉTRE (right-rechts-droit) AST_PRE P 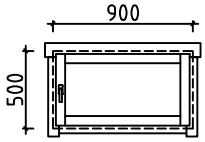	1	900	500
		1		
		1		

House 4413881	Material	File 4413881.dwg	Sheet 9

Pos	Assembly Instructions-Montageanleitungen-Instructions de Montage	PCS	Profile (mm)	L (mm)
L1	BOARD-BRETT-PLANCHE	4	18x120	2290
L2	BOARD-BRETT-PLANCHE	8	18x90	2290
L3	BOARD-BRETT-PLANCHE	2	18x120	3040
L4	BOARD-BRETT-PLANCHE	4	18x90	3040
L5	BOARD-BRETT-PLANCHE	34	18x70	320

GB1 — 2 — 36x320 — 2290

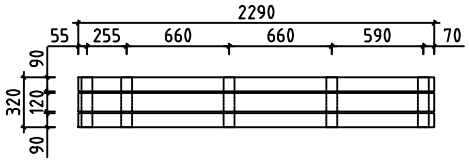

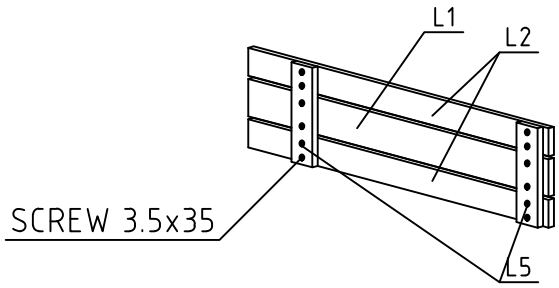

GB2 — 2 — 36x320 — 2290 +35

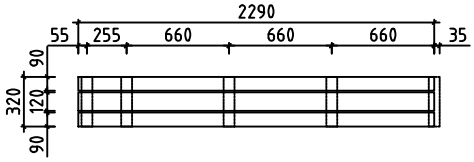

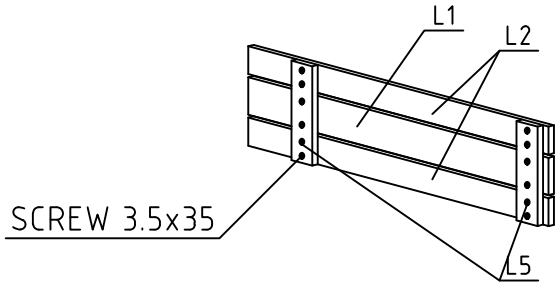

GB3 — 2 — 36x320 — 3040

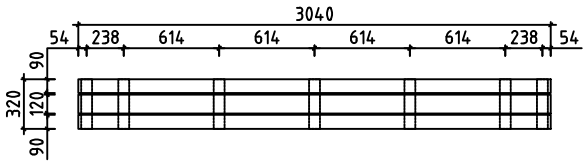

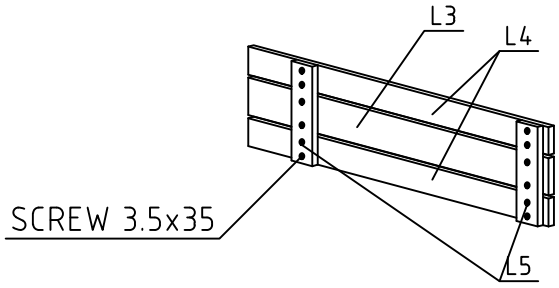

#001	1,2	4500	2
#002		4200	1
#003	1,2	4200	18
#004	A,B	3000	2
#005	A,B	2850	2
#006	A,B	2700	2
#007	A,B	2700	26
#008	A,B	1478	2
#009	1	1295	30
#010	B	895	8