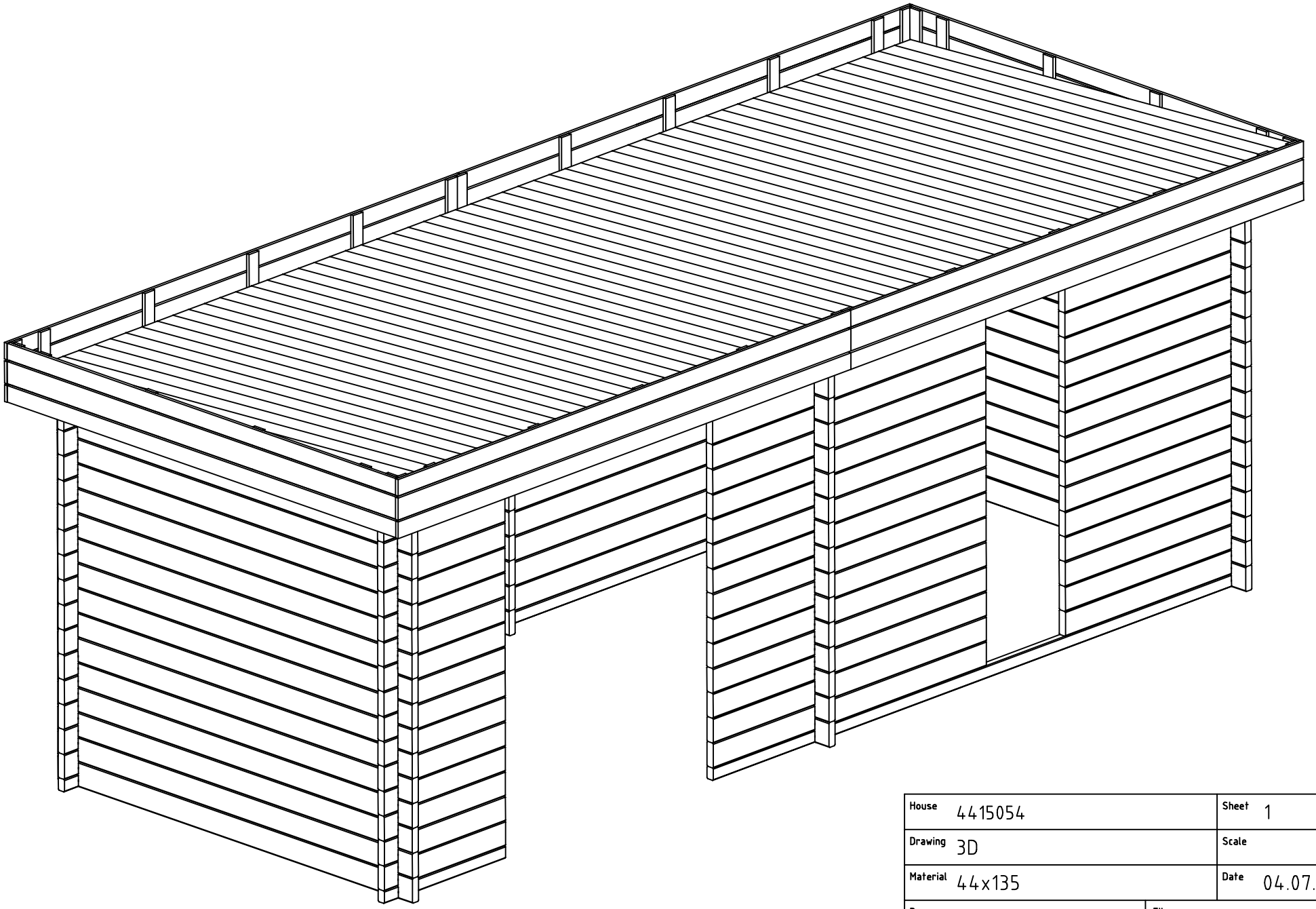

House	4415054	Sheet	1
Drawing	3D	Scale	
Material	44x135	Date	04.07.2023
Drawer	RP	File	4415054 3D.dwg

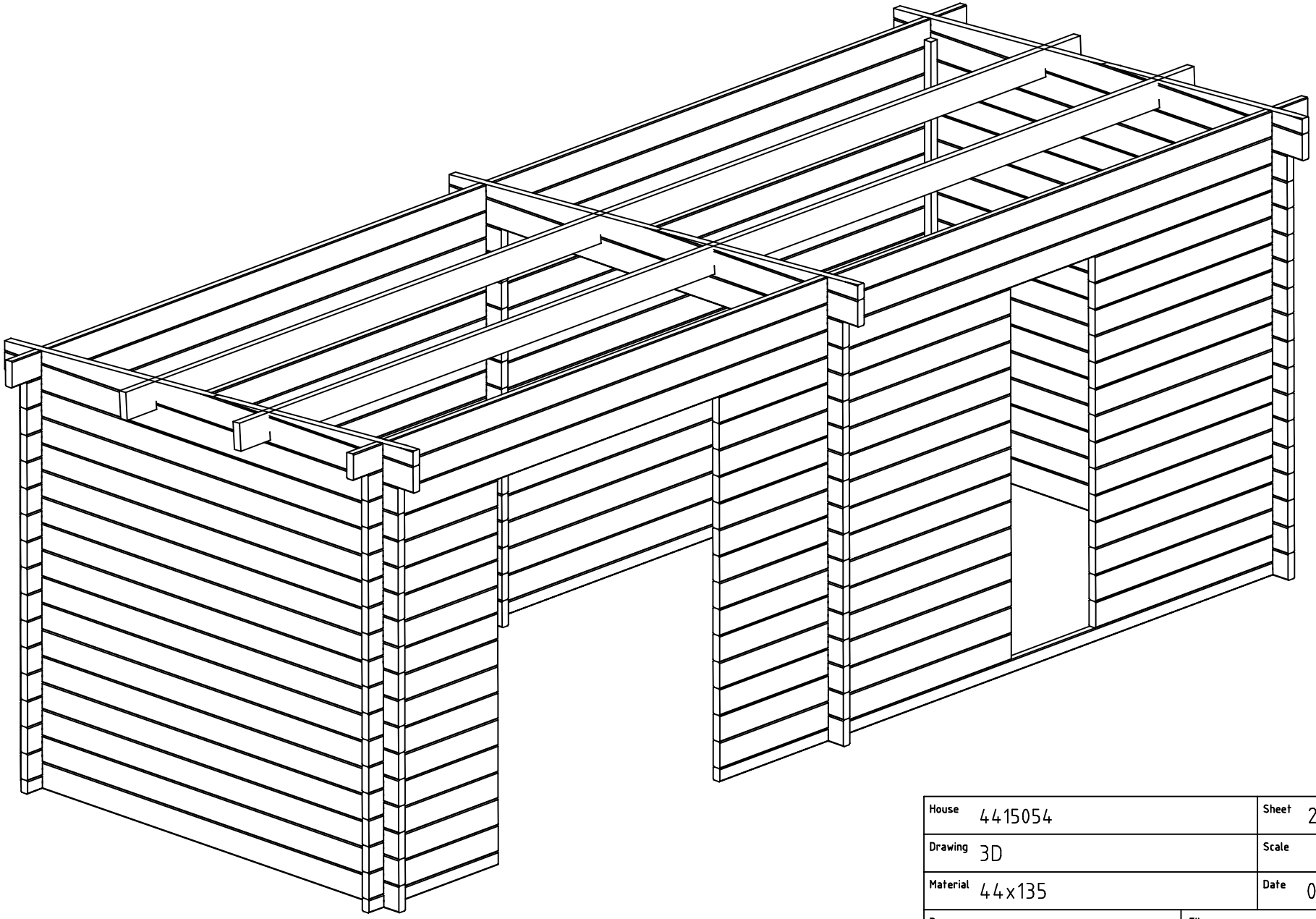

House	4415054	Sheet	2
Drawing	3D	Scale	
Material	44x135	Date	04.07.2023
Drawer	RP	File	4415054 3D.dwg

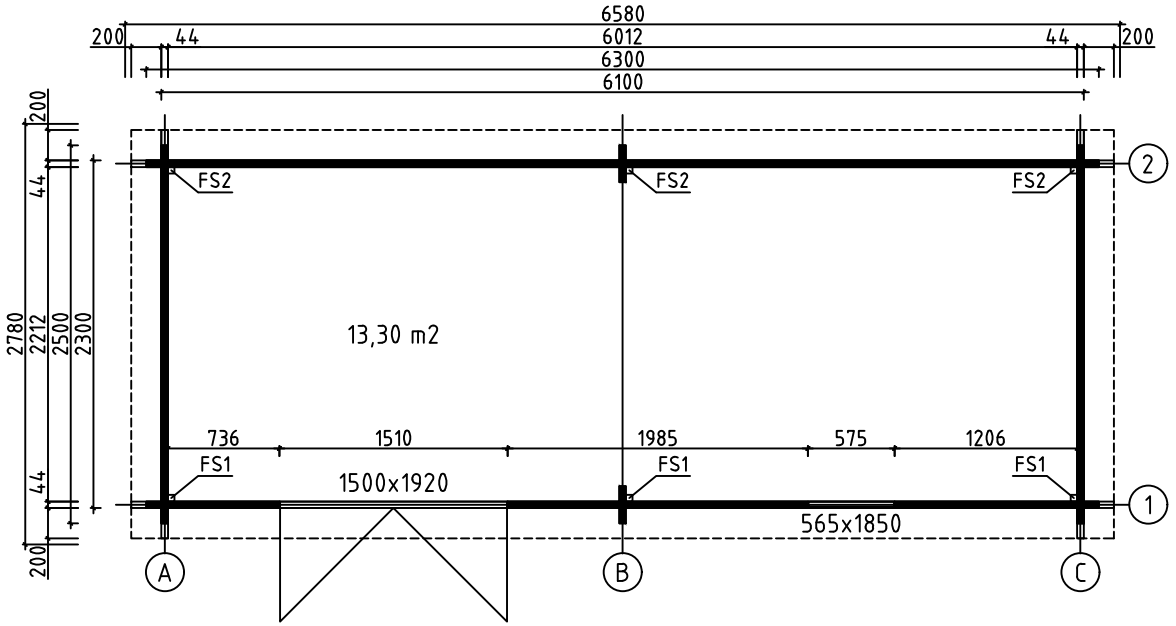

House	4415054	Sheet	3
Drawing	GROUNDPLAN	Scale	1:50
Material	44x135	Date	04.07.2023
Drawer	RP	File	4415054.dwg

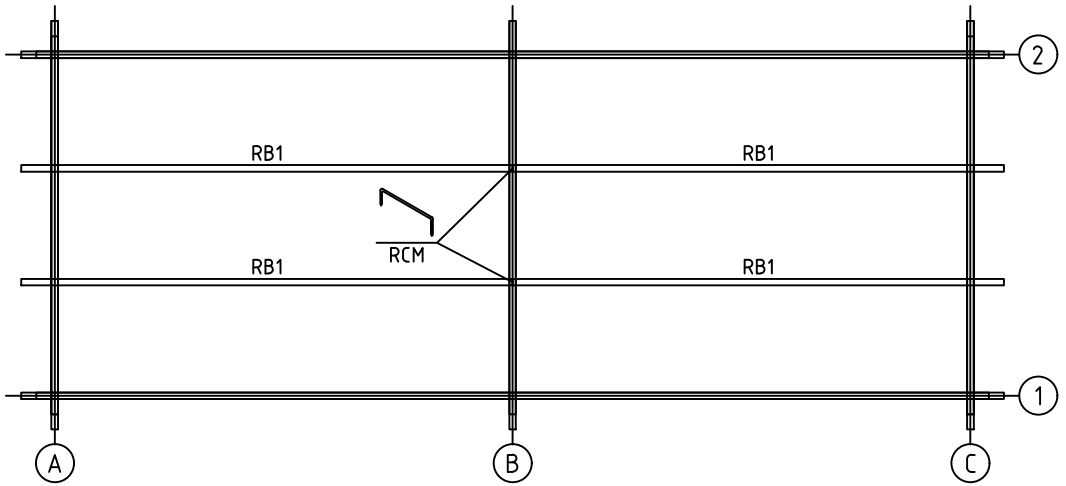

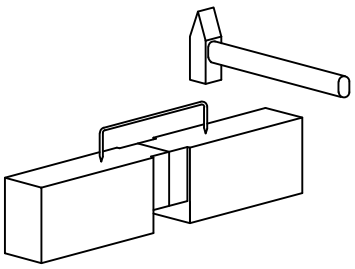

House	4415054	Sheet	4
Drawing	ROOFBEAMS	Scale	1:50
Material	43x140	Date	04.07.2023
Drawer	RP	File	4415054.dwg

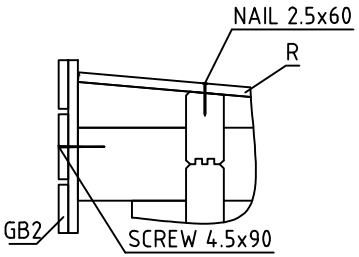

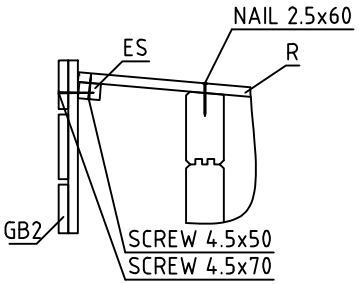

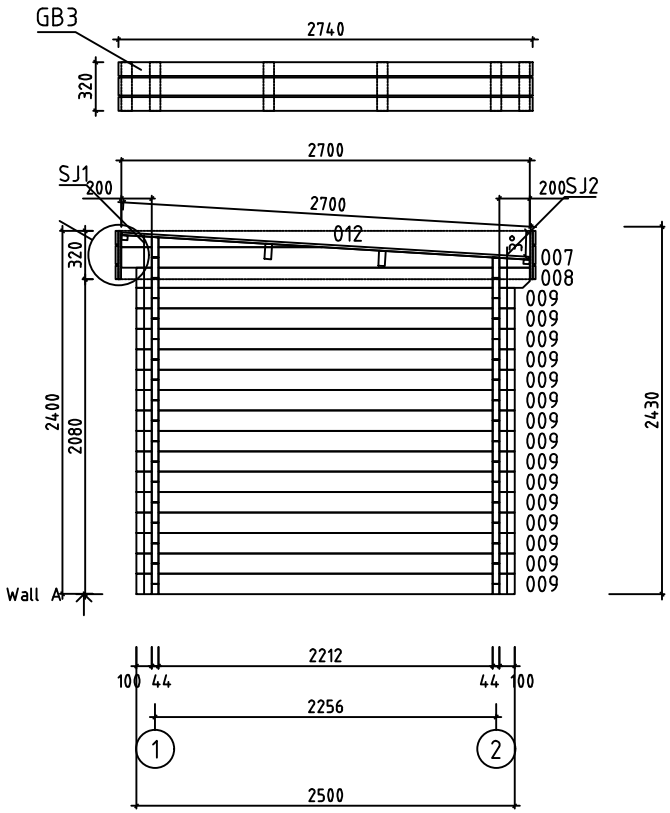

House	4415054	Sheet	5
Drawing	WALL A	Scale	1:50
Material	44x135	Date	04.07.2023
Drawer	RP	File	4415054.dwg

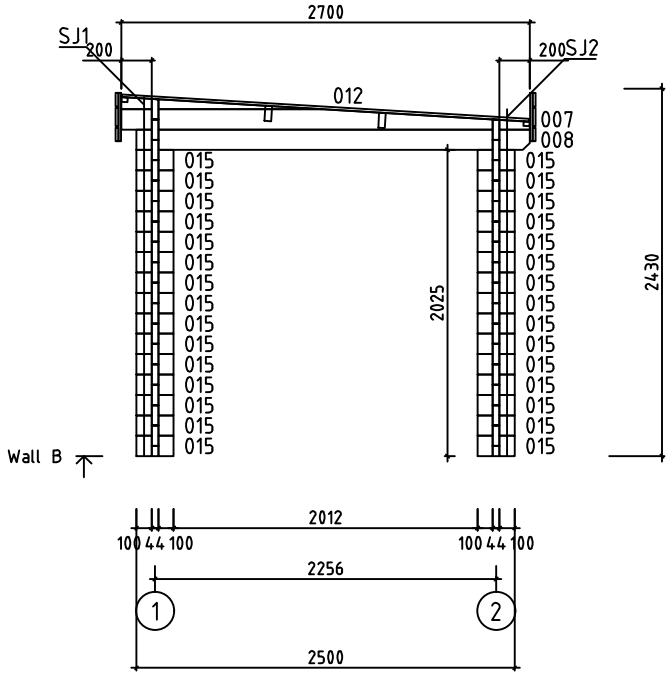

House	4415054	Sheet	6
Drawing	WALL B	Scale	1:50
Material	44x135	Date	04.07.2023
Drawer	RP	File	4415054.dwg

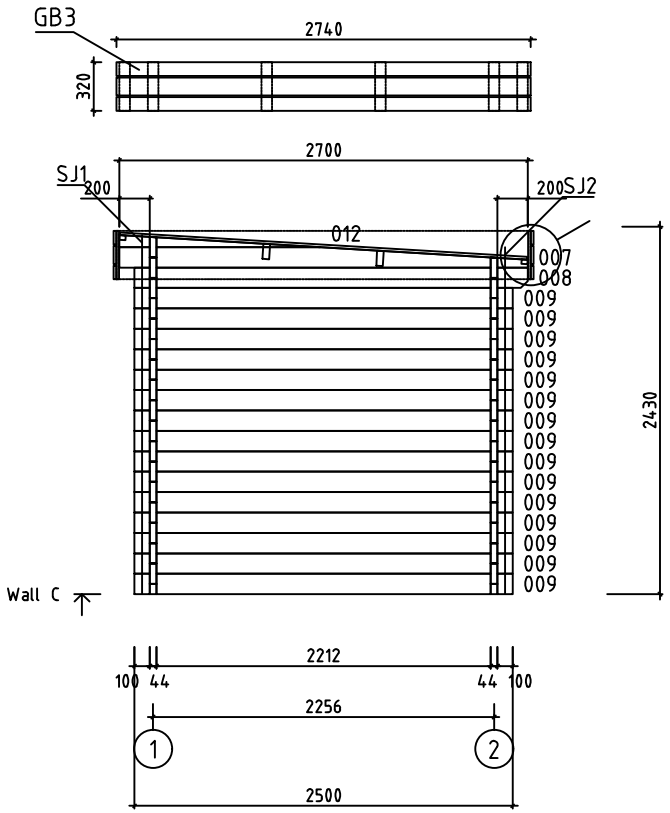

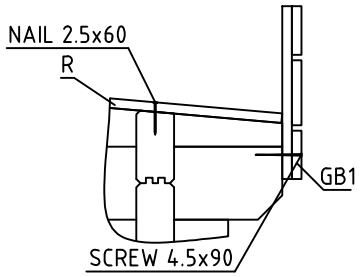

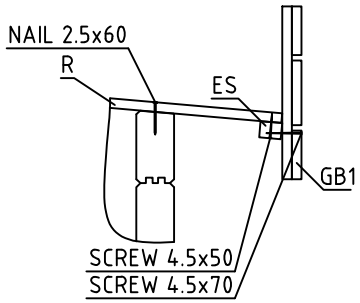

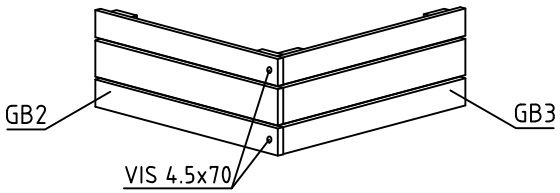

House	4415054	Sheet	7
Drawing	WALL C	Scale	1:50
Material	44x135	Date	04.07.2023
Drawer	RP	File	4415054.dwg

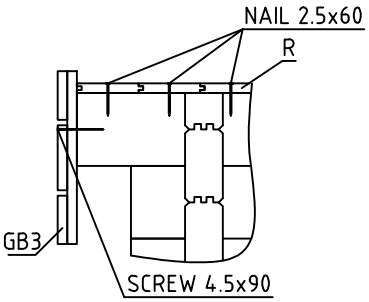

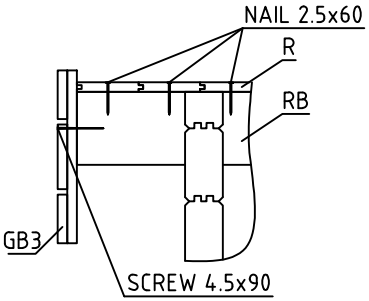

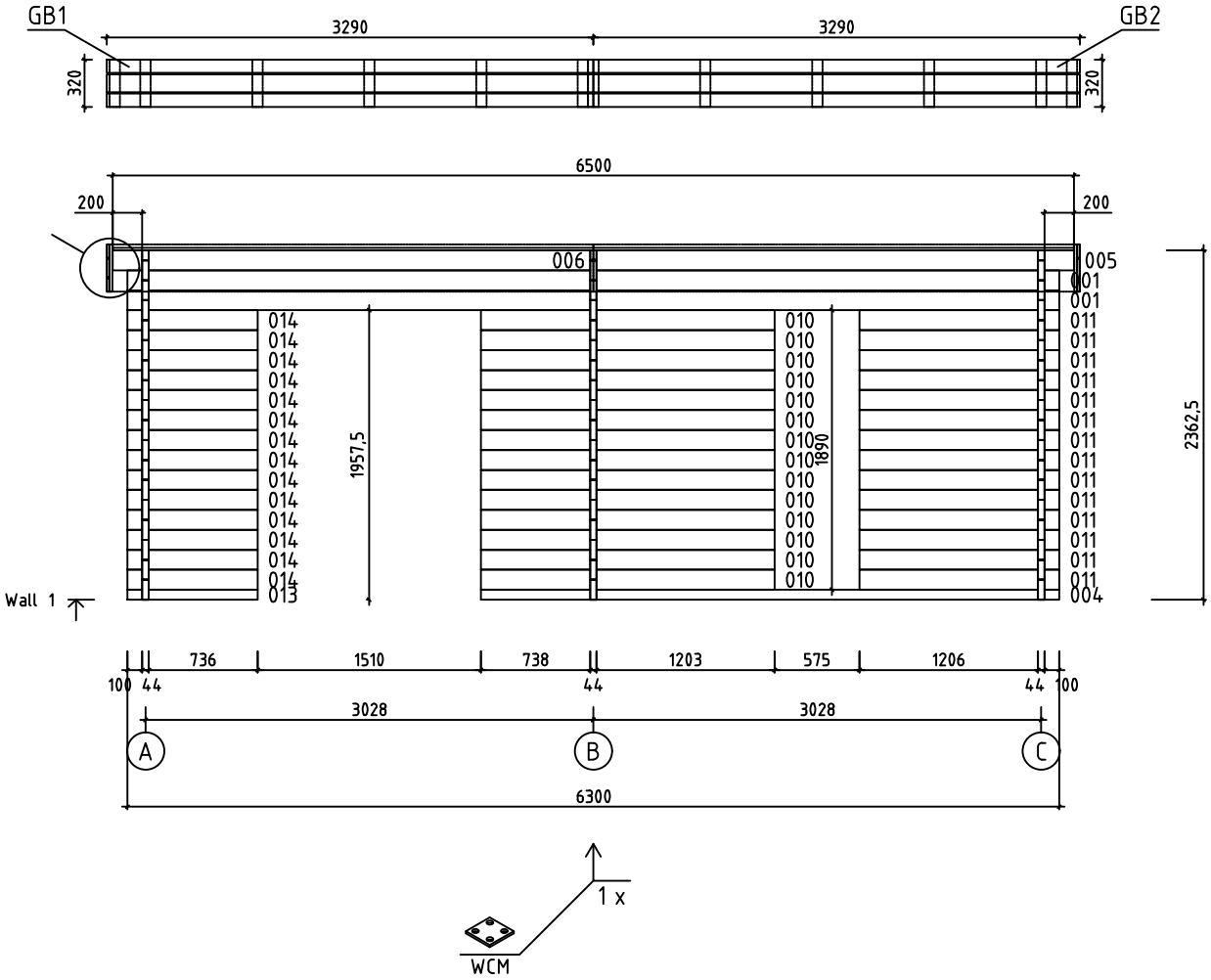

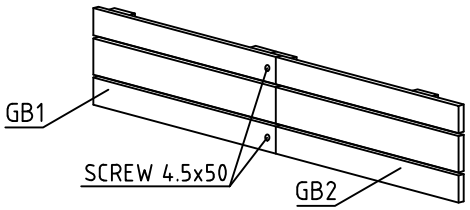

House	4415054	Sheet	8
Drawing	WALL 1	Scale	1:50
Material	44x135	Date	04.07.2023
Drawer	RP	File	4415054.dwg

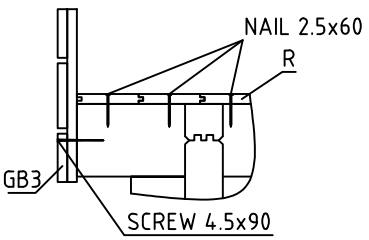

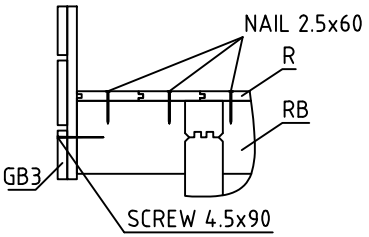

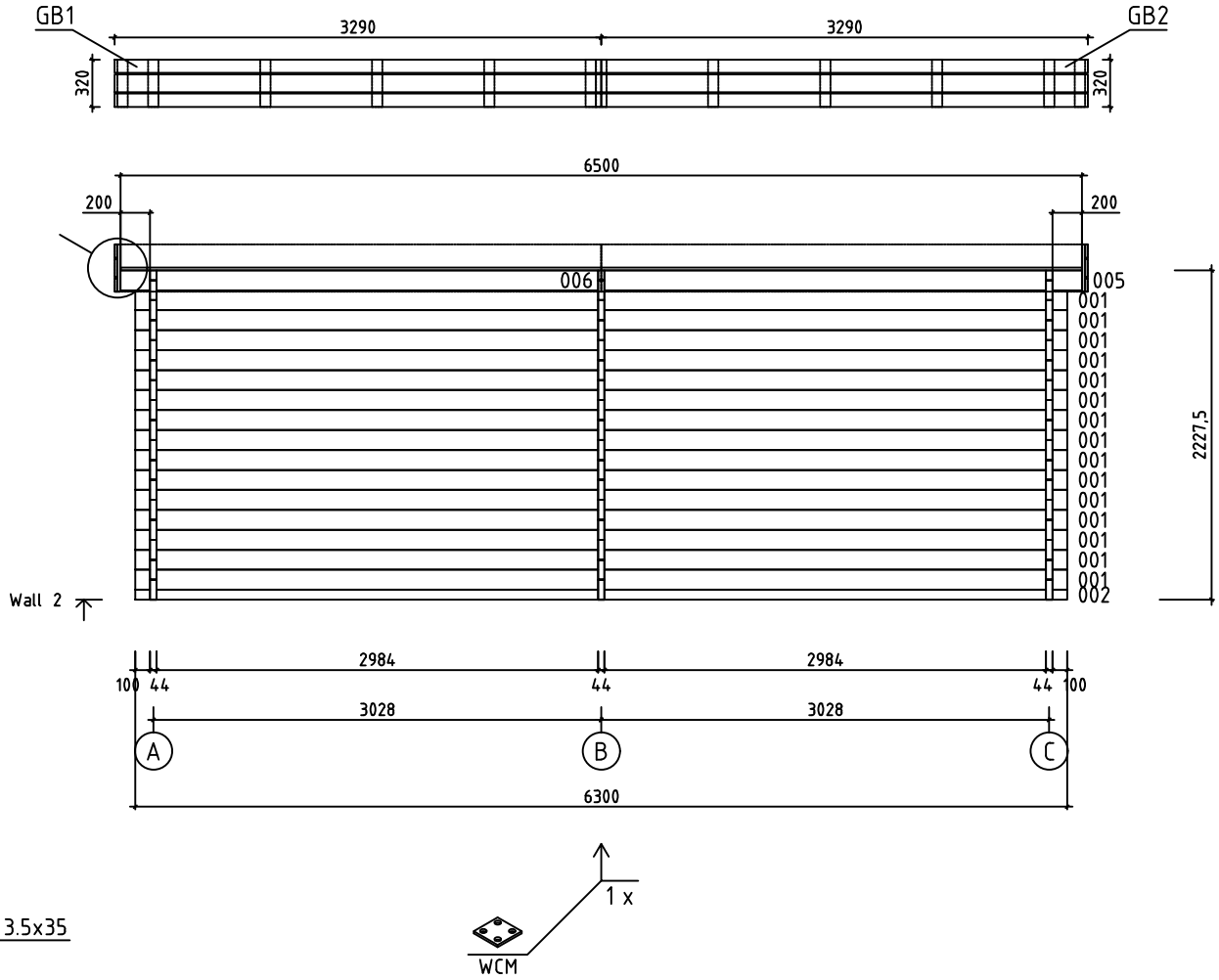

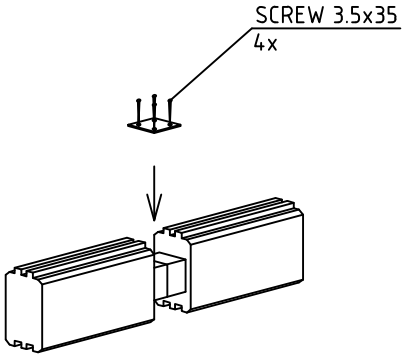

House	4415054	Sheet	9
Drawing	WALL 2	Scale	1:50
Material	44x135	Date	04.07.2023
Drawer	RP	File	4415054.dwg

Pos	Specification-Bestimmung-Spécification	PCS	Profile (mm)	L (mm)
001	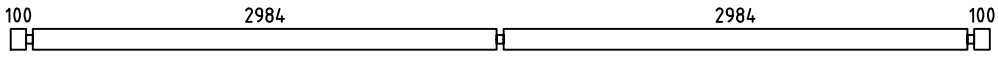	17	44x135	6300
002		1	44x68	6300
003	SPARE BEAM-ERZATZBOHLE-MADRIER DE RÉSERVE 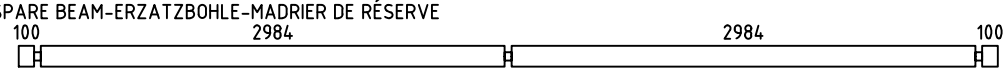	1	44x135	6300
004	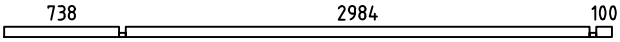	1	44x68	3910
005	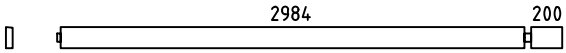	2	44x135	3250
006	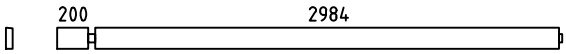	2	44x135	3250
008	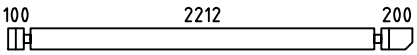	3	44x135	2600
009	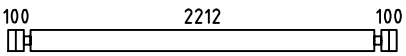	30	44x135	2500
010	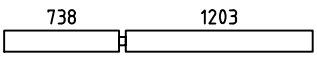	14	44x135	1985
011	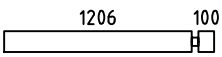	14	44x135	1350
013	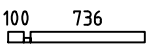	1	44x68	880
014	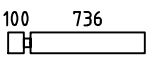	14	44x135	880
015		30	44x135	244
WA-1 WB-1 WC-1	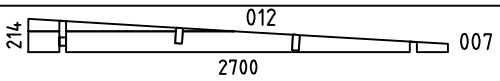	3	44x214	2700
HB	HIT BLOCK-SCHLAGHÖLZER-MADRIERS D´ASSEMBLAGE 	2	44x135	300
FS1	FIXING SLAT-BEFESTIGUNGSLEISTE-BAGUETTE DE FIXATION 	3	43x43	2260
FS2	FIXING SLAT-BEFESTIGUNGSLEISTE-BAGUETTE DE FIXATION 	3	43x43	2130
RB1	ROOFBEAMS-DACHBALKEN-SOLIVES DE PLAFOND 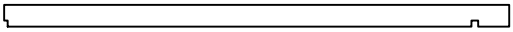	4	43x140	3250
R1	ROOFBOARD-DACHBRETT-VOLIGES  or-oder-ou	58+1 76+1	18x114 18x88	2700
GB1	ASSEMBLY REQUIRED-MONTAGE ERFORDERLICH-ASSEMBLAGE REQUIS 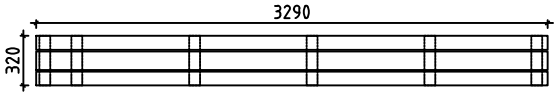	2	36x320	3290
GB2	ASSEMBLY REQUIRED-MONTAGE ERFORDERLICH-ASSEMBLAGE REQUIS 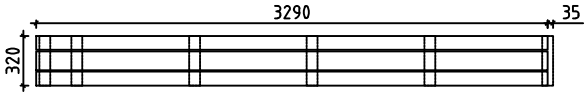	2	36x320	3290 +35
GB3	ASSEMBLY REQUIRED-MONTAGE ERFORDERLICH-ASSEMBLAGE REQUIS 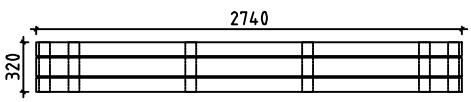	2	36x320	2740

House 4415054	Material	File 4415054.dwg	Sheet 10

Pos	Specification-Bestimmung-Spécification	PCS	Profile (mm)	L (mm)
ES1	EAVE SLAT-TRAUFENLEISTE-BAGUETTES POUR FIXER LES LATTES SOUS VOLIGES	4	30x40	2980
ES2	EAVE SLAT-TRAUFENLEISTE-BAGUETTES POUR FIXER LES LATTES SOUS VOLIGES	4	30x40	200
WCM	WALLBEAMS CONNECTING METAL-WANDBOHLEN BEFESTIGUNG -METALLE-PATTE D´ASSEMBLAGE	2	25	25
RCM	ROOFBEAMS CONNECTING METAL-DACHBALKEN BEFESTIGUNGSMETALLE -CONNECTEUR MÉTALLIQUE POUR SOLIVES DE PLAFOND	2	ϕ6.0	200
SJ1	SCREW JOINT-GEWINDESTANGE -TIGES FILETÉS	3	M10	2390
SJ1	SCREW JOINT-GEWINDESTANGE -TIGES FILETÉS	3	M10	2250
	NAIL-NAGEL-CLOUS FOR-FÜR-POUR COATING FOR ROOF-BESCHICHTUNG FÜR DACH-REVÉTEMENT DE TOIT	260	ϕ2.5	20
	NAIL-NAGEL-CLOUS FOR-FÜR-POUR R1	310	ϕ2.5	60
	SCREWS-SCHRAUBEN-VIS FOR-FÜR-POUR GB1, GB2, GB3, WCM	224	ϕ3.5	35
	SCREWS-SCHRAUBEN-VIS FOR-FÜR-POUR ES1, ES2, GB1, GB2	30	ϕ4.5	50
	SCREWS-SCHRAUBEN-VIS FOR-FÜR-POUR GB1, GB2, GB3, FS1, FS2	50	ϕ4.5	70
	SCREWS-SCHRAUBEN-VIS FOR-FÜR-POUR GB1, GB2, GB3	20	ϕ4.5	90
	SCREWS-SCHRAUBEN-VIS FOR-FÜR-POUR WA-1, WB-1, WC-1, RB1	20	ϕ6.0	160
	COATING FOR ROOF-BESCHICHTUNG FÜR DACH-REVÉTEMENT DE TOIT	2,0	R = 15m	
	DOUBLEDOOR-DOPPELTÜR-DOUBLE PORTE (right-rechts-droit) AST_ISO_PL P	1	1500	1920
	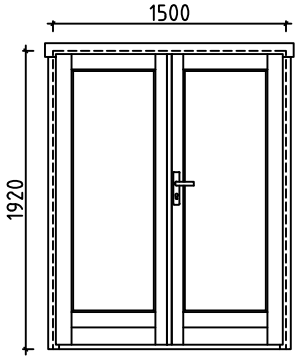	1 1 1 6		
	WINDOW-FENSTER-FENÉTRE (right-rechts-droit) AST_PRE P	1	565	1850
	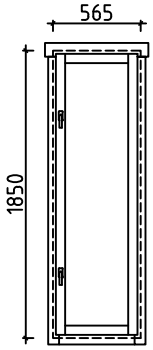	1 1		

House 4415054	Material	File 4415054.dwg	Sheet 11

Pos	Assembly Instructions-Montageanleitungen-Instructions de Montage	PCS	Profile (mm)	L (mm)
L1	BOARD-BRETT-PLANCHE	4	18x120	3290
L2	BOARD-BRETT-PLANCHE	8	18x90	3290
L3	BOARD-BRETT-PLANCHE	2	18x120	2740
L4	BOARD-BRETT-PLANCHE	4	18x90	2740
L5	BOARD-BRETT-PLANCHE	36	18x70	320

GB1 — 2 — 36x320 — 3290

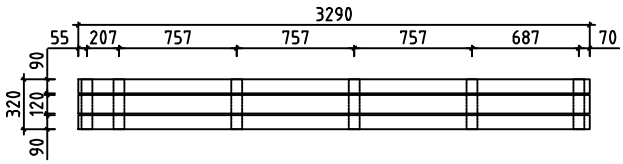

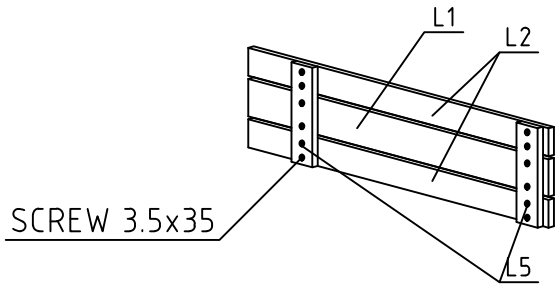

GB2 — 2 — 36x320 — 3290 +35

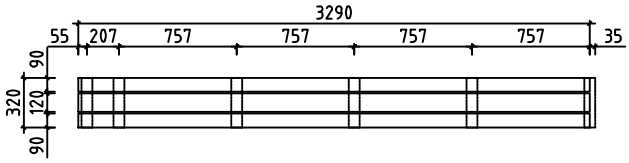

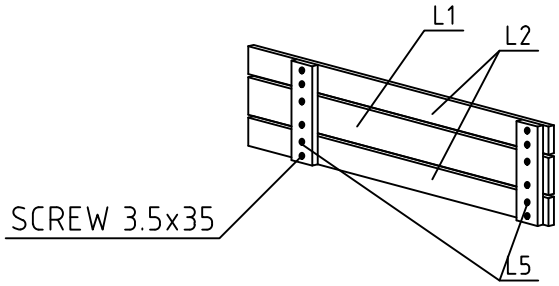

GB3 — 2 — 36x320 — 2740

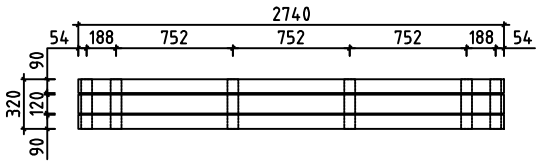

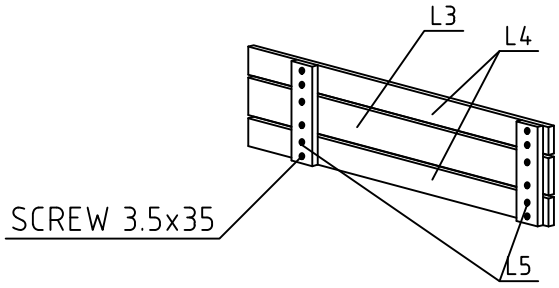

House 4415054	Material	File 4415054.dwg	Sheet 12

#001	1,2	6300	17
#002	2	6300	1
#003		6300	1
#004	1	3910	1
#005	1,2	3250	2
#006	1,2	3250	2
#007	A,B,C	2700	3
#008	A,B,C	2600	3
#009	A,C	2500	30
#010	1	1985	14
#011	1	1350	14
#012	A,B,C	1328	3
#013	1	880	1
#014	1	880	14
#015	B	244	30