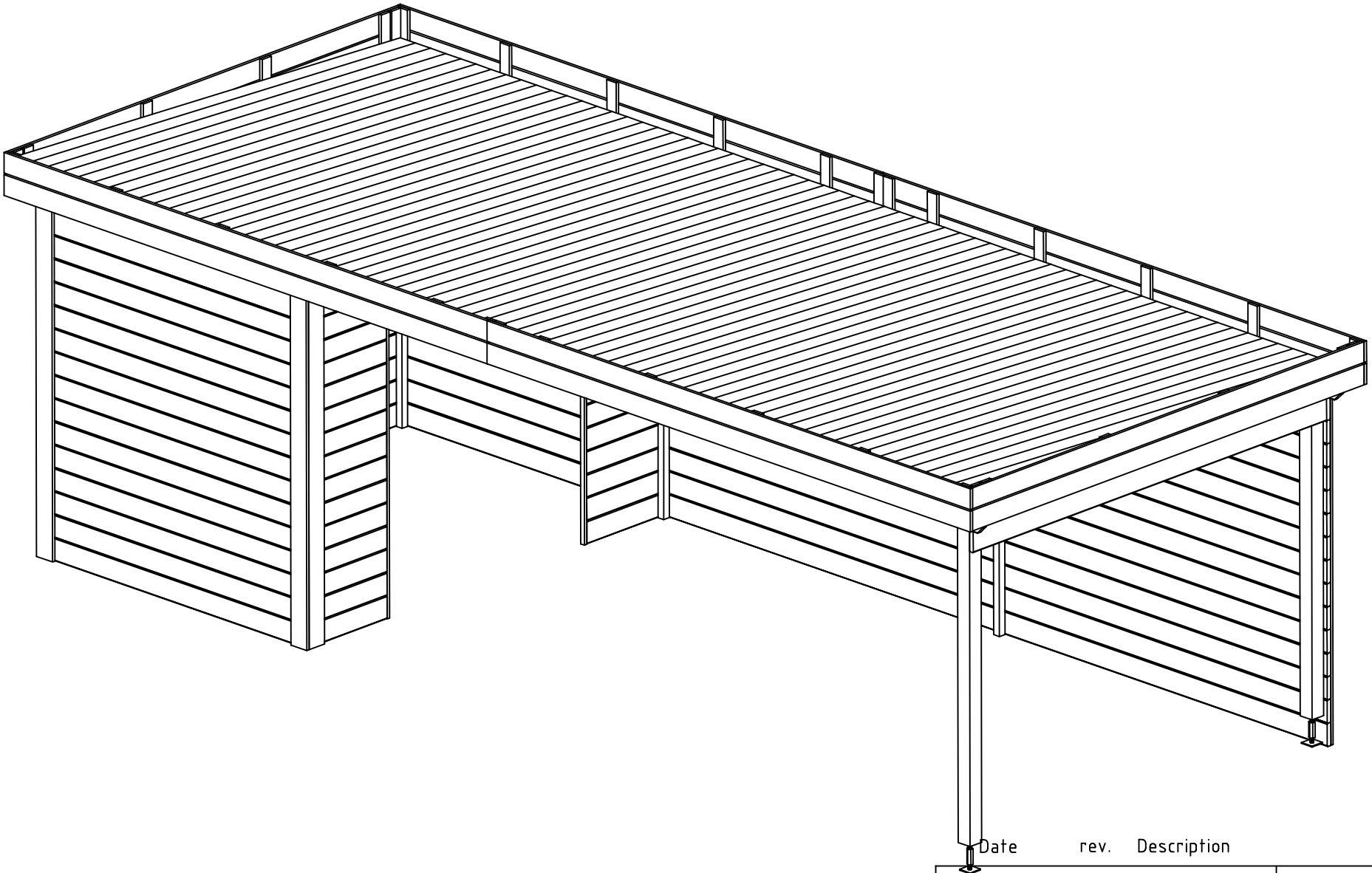

Date	rev.	Description

House	British 28	Sheet	1
Drawing	3D Plan	Scale	
Material	28x135	Date	22.11.2023
Drawer	RP	File	British 28 3D.dwg

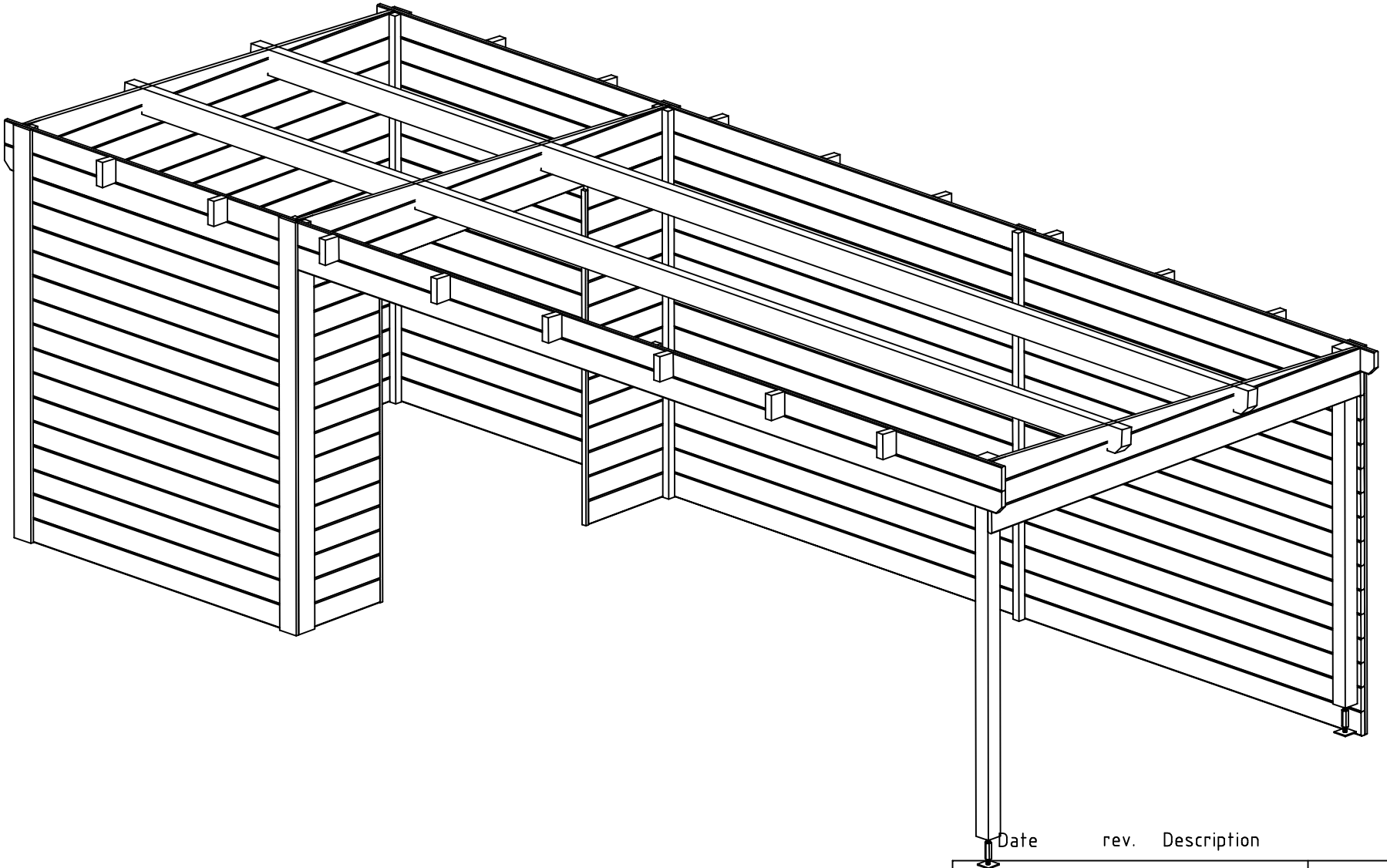

Date	rev.	Description

House	British 28	Sheet	2
Drawing	3D Plan	Scale	
Material	28x135	Date	22.11.2023
Drawer	RP	File	British 28 3D.dwg

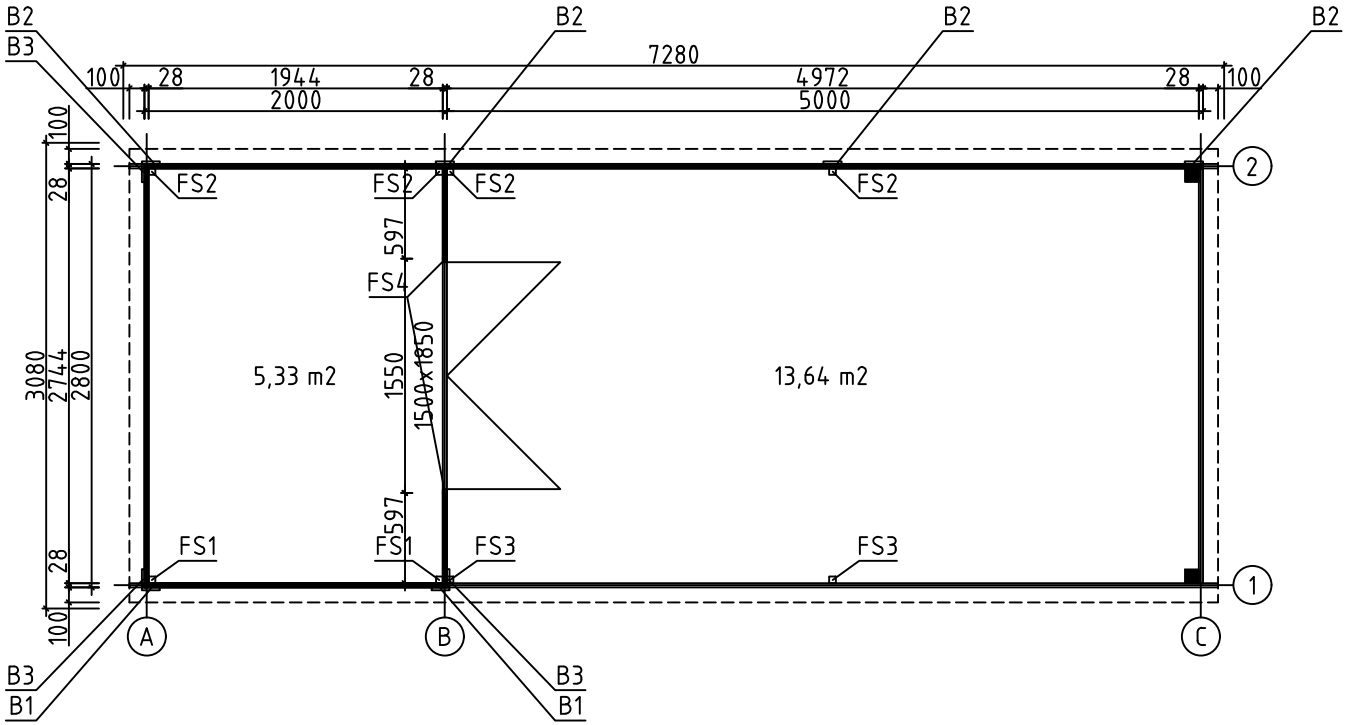

House	British 28	Sheet	3
Drawing	GROUNDPLAN	Scale	1:50
Material	28x135	Date	22.11.2023
Drawer	RP	File	British 28.dwg

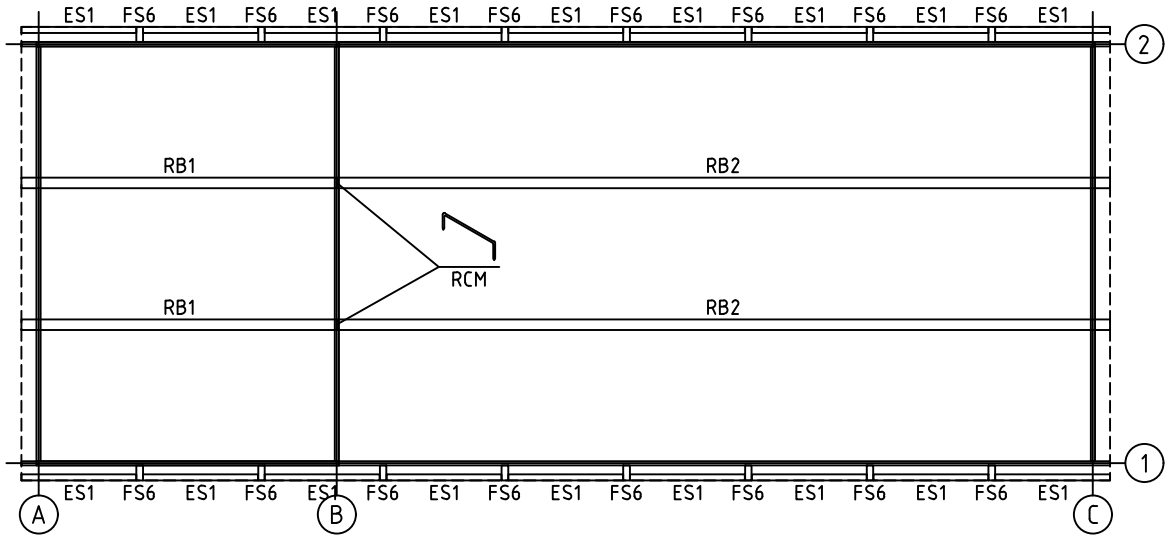

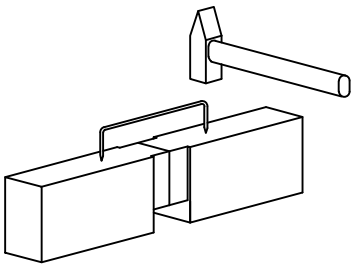

House	British 28	Sheet	4
Drawing	ROOFBEAMS	Scale	1:50
Material	70x140, 43x140, 30x40	Date	22.11.2023
Drawer	RP	File	British 28.dwg

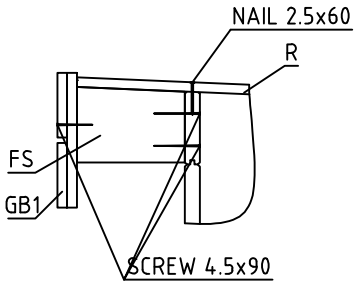

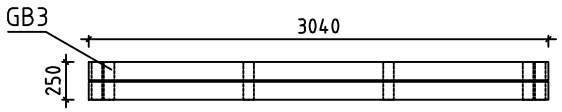

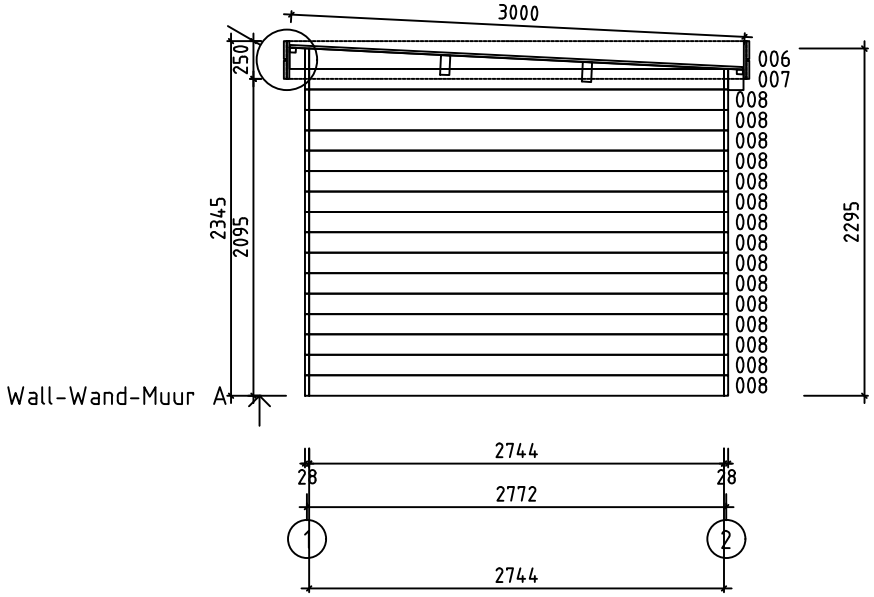

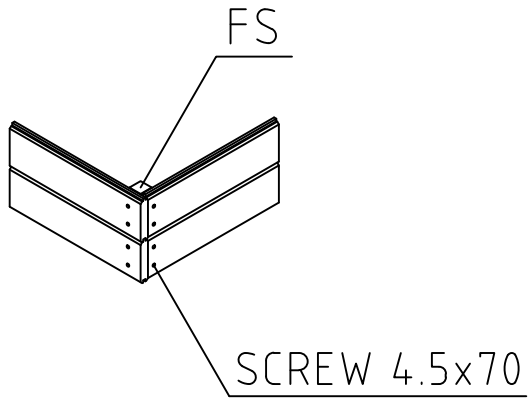

House	British 28	Sheet	5
Drawing	WALL-WAND-MUUR A	Scale	1:50
Material	28x135	Date	22.11.2023
Drawer	RP	File	British 28.dwg

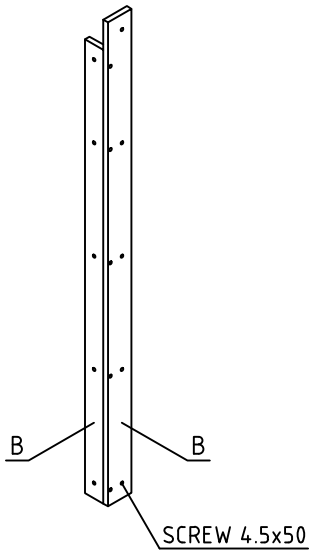

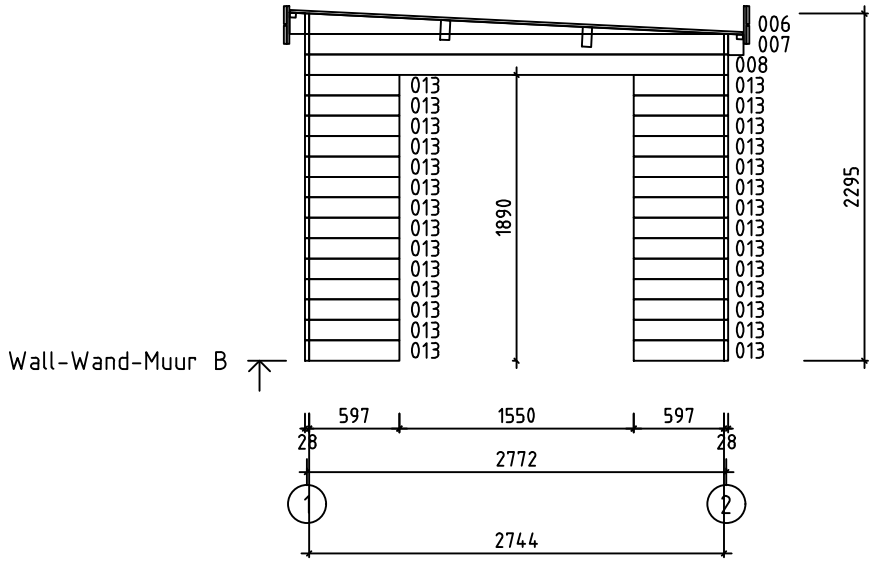

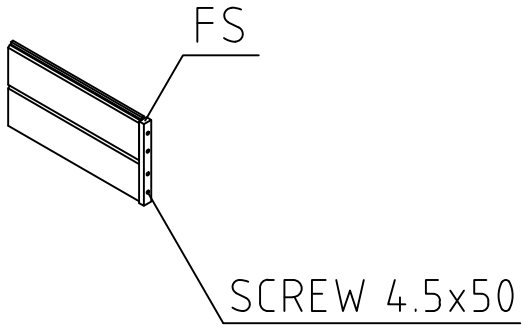

House	British 28	Sheet	6
Drawing	WALL-WAND-MUUR B	Scale	1:50
Material	28x135	Date	22.11.2023
Drawer	RP	File	British 28.dwg

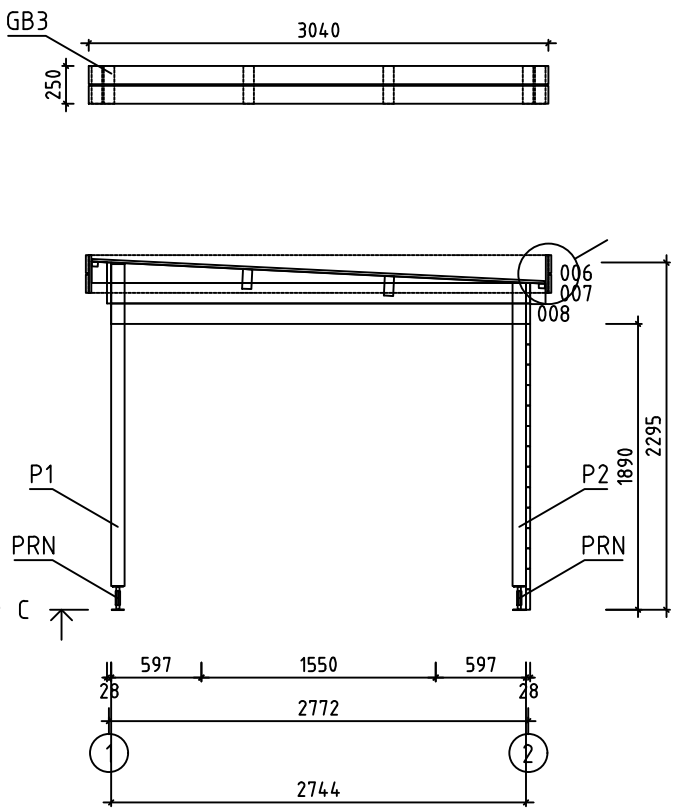

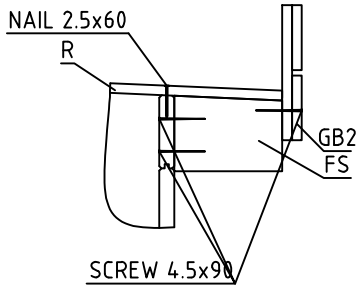

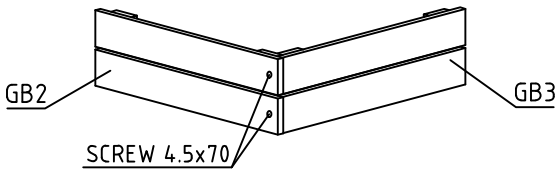

House	British 28	Sheet	7
Drawing	WALL-WAND-MUUR C	Scale	1:50
Material	28x135	Date	22.11.2023
Drawer	RP	File	British 28.dwg

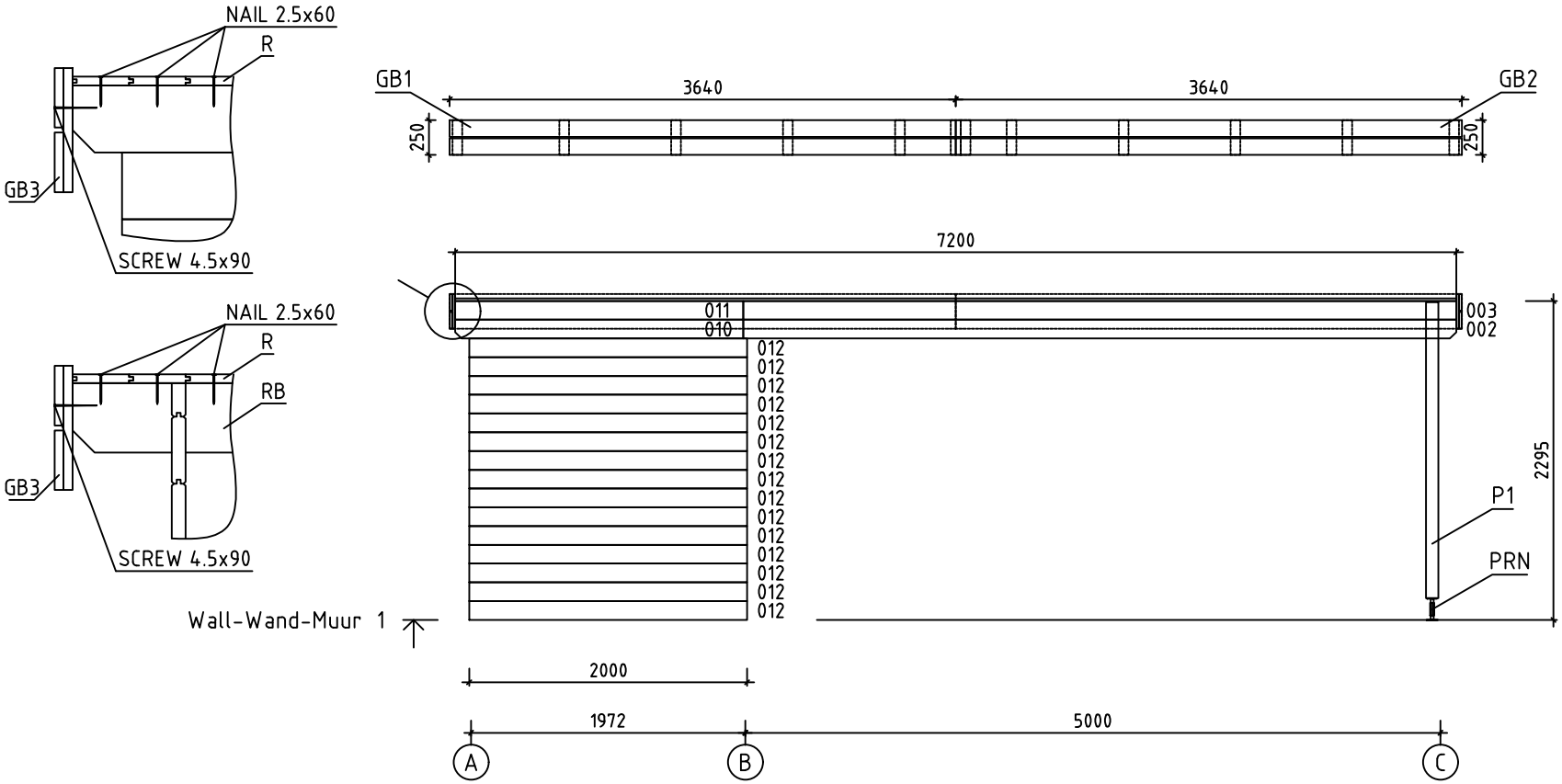

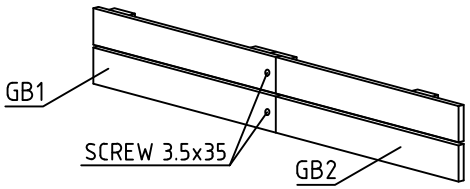

House	British 28	Sheet	8
Drawing	WALL-WAND-MUUR 1	Scale	1:50
Material	28x135	Date	22.11.2023
Drawer	RP	File	British 28.dwg

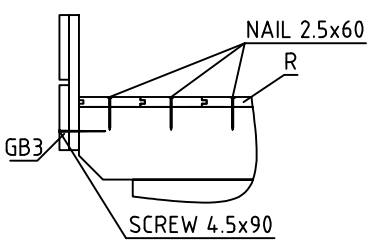

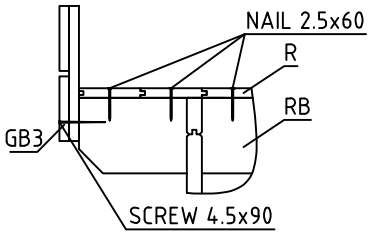

Wall-Wand-Muur 2

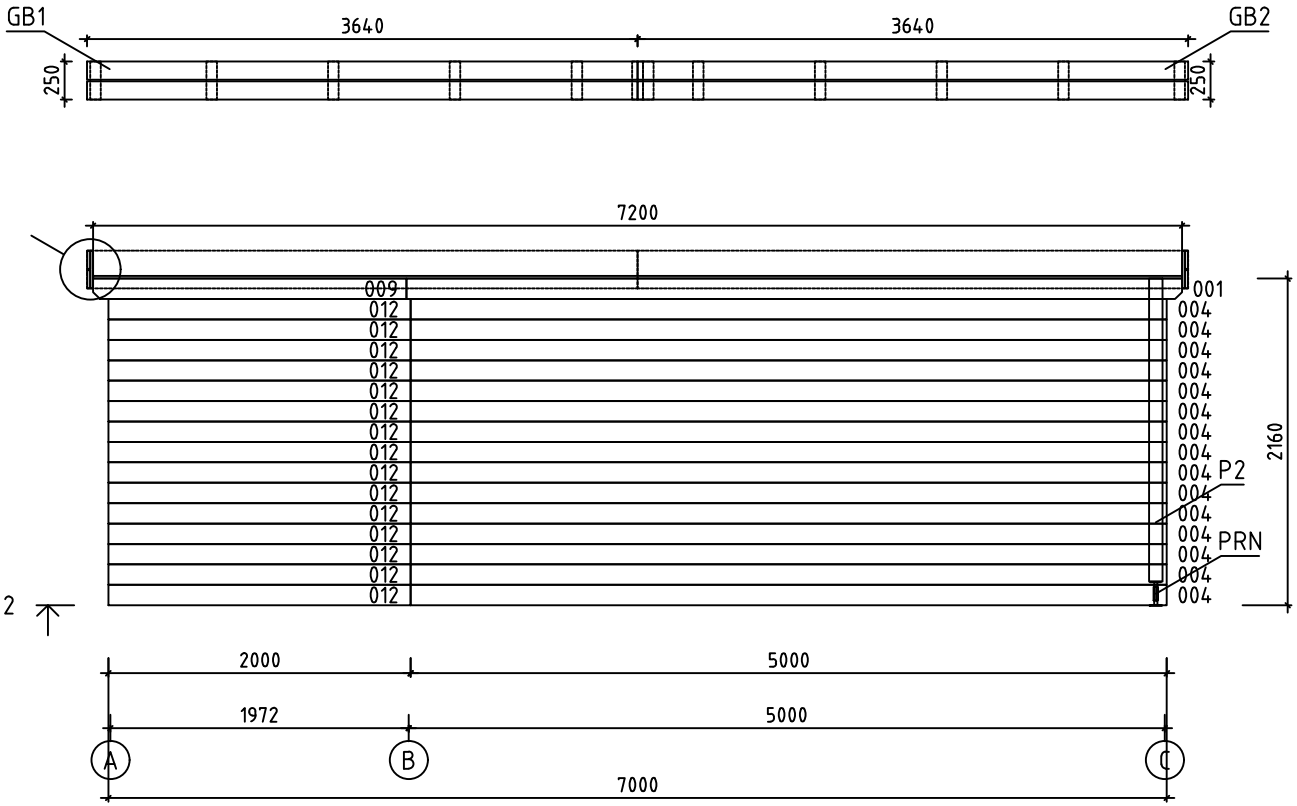

House	British 28	Sheet	9
Drawing	WALL-WAND-MUUR 2	Scale	1:50
Material	28x135	Date	22.11.2023
Drawer	RP	File	British 28.dwg

Pos	Specification-Bestimmung-Spécification	PCS	Profile (mm)	L (mm)
001	PM	1	28x135	5128
002		1	28x135	5128
003	PM	1	28x135	5128
004		15	28x135	5000
005	SPARE BEAM-ERZATZBOHLE-MADRIER DE RÉSERVE	1	28x135	5000
008		17	28x135	2744
009	PM	1	28x135	2072
010		1	28x135	2072
011	PM	1	28x135	2072
012		30	28x135	2000
013		28	28x135	597
WB-1 WA-1 WC-1	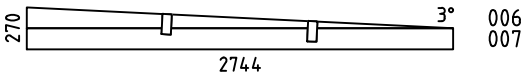	3	28x270	2744
HB	HIT BLOCK-SCHLAGHÖLZER-MADRIERS D´ASSEMBLAGE 	2	28x135	300
FS5	FIXING SLAT-BEFESTIGUNGSLEISTE-SUPPORTS EXTENSION TOITURE	16	43x140	100
FS1	CORNER STUD-ECKPFOSTEN-POTEAUX D´ANGLE POUR FIXATION DES MADRIERS	2	43x43	2285
FS2	CORNER STUD-ECKPFOSTEN-POTEAUX D´ANGLE POUR FIXATION DES MADRIERS	4	43x43	2155
FS3	CORNER STUD-ECKPFOSTEN-POTEAUX D´ANGLE POUR FIXATION DES MADRIERS	2	43x43	260
FS4	FIXING FILLET-FIXIRUNGSLEISTE-PROFIL DE FIXATION	2	28x18	1990
P1	POST-PFOSTEN-POTEAU	1	90x90	2130
P2	POST-PFOSTEN-POTEAU	1	90x90	2005
B1	CORNER FILLET-DECKLEISTE-PROFILS DE FINITION ANGLES A L´EXTERIEUR	2	18x120	2295
B2	CORNER FILLET-DECKLEISTE-PROFILS DE FINITION ANGLES A L´EXTERIEUR	4	18x120	2160
B3	CORNER FILLET-DECKLEISTE-PROFILS DE FINITION ANGLES A L´EXTERIEUR	3	18x120	2025
RB2	ROOFBEAMS-DACHBALKEN-SOLIVES DE PLAFOND 4972 100	2	70x140	5114
RB1	ROOFBEAMS-DACHBALKEN-SOLIVES DE PLAFOND 100 1944	2	70x140	2086

House British 28	Material	File British 28.dwg	Sheet 10

Pos	Specification-Bestimmung-Spécification	PCS	Profile (mm)	L (mm)
R1	ROOFBOARD-DACHBRETT-VOLIGES  or-oder-ou	64+1 83+1	18x114 18x88	3000
GB1	ASSEMBLY REQUIRED-MONTAGE ERFORDERLICH-ASSEMBLAGE REQUIS 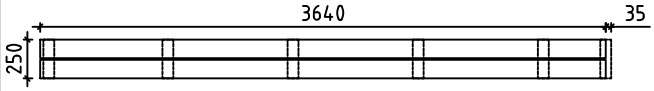	2	36x250	3640 +35
GB2	ASSEMBLY REQUIRED-MONTAGE ERFORDERLICH-ASSEMBLAGE REQUIS 	2	36x250	3640
GB3	ASSEMBLY REQUIRED-MONTAGE ERFORDERLICH-ASSEMBLAGE REQUIS 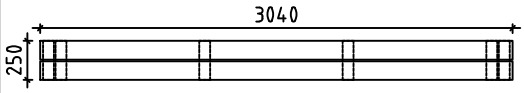	2	36x250	3040
ES1	EAVE SLAT-TRAUFENLEISTE-BAGUETTES POUR FIXER LES LATTES SOUS VOLIGES 	18	30x40	760
PRN	POST REGULATOR-PFOSTEN REGLER- PIED MÉTALLIQUE RÉGLABLE POUR POTEAU 	2		
RCM	ROOFBEAMS CONNECTING METAL-DACHBALKEN BEFESTIGUNGSMETALLE -CONNECTEUR MÉTALLIQUE POUR SOLIVES DE PLAFOND 	2	⌀6.0	200
	NAIL-NAGEL-CLOUS FOR-FÜR-POUR COATING FOR ROOF-BESCHICHTUNG FÜR DACH-REVÉTEMENT DE TOIT	360	⌀2.5	20
	NAIL-NAGEL-CLOUS FOR-FÜR-POUR R1	340	⌀2.5	60
	SCREWS-SCHRAUBEN-VIS FOR-FÜR-POUR GB1, GB2, GB3	148	⌀3.5	35
	SCREWS-SCHRAUBEN-VIS FOR-FÜR-POUR PRN 	16	⌀6.0	45
	SCREWS-SCHRAUBEN-VIS FOR-FÜR-POUR P1, P2 FS4, B1, B2, B3, ES1	190	⌀4.5	50
	SCREWS-SCHRAUBEN-VIS FOR-FÜR-POUR GB1, GB2, GB3 FS1, FS2, FS3, P1, P2	400	⌀4.5	70
	SCREWS-SCHRAUBEN-VIS FOR-FÜR-POUR GB1, GB2, GB3, FS5	60	⌀4.5	90
	SCREWS-SCHRAUBEN-VIS FOR-FÜR-POUR WA-1, WB-1, WC-1, RB1, RB2	30	⌀6.0	160
	COATING FOR ROOF-BESCHICHTUNG FÜR DACH-REVÉTEMENT DE TOIT 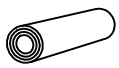	2,0	R = 15m	
	DOUBLEDOOR-DOPPELTÜR-DOUBLE PORTE (right-rechts-droit) AST__PL P 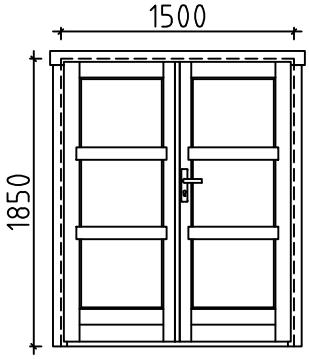 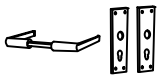   	1 1 1 1 6 2	1500	1850

House British 28	Material	File British 28.dwg	Sheet 11

Pos	Assembly Instructions-Montageanleitungen-Instructions de Montage	PCS	Profile (mm)	L (mm)
L1	BOARD-BRETT-PLANCHE	8	18x120	3640
L2	BOARD-BRETT-PLANCHE	4	18x120	3040
L3	BOARD-BRETT-PLANCHE	36	18x70	250

GB1 — 2 — 36x250 — 3640 +35

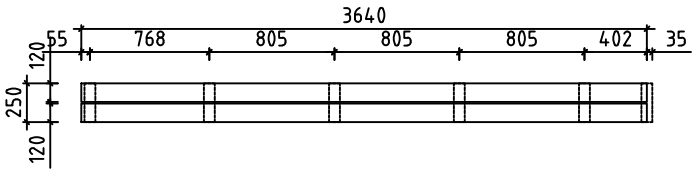

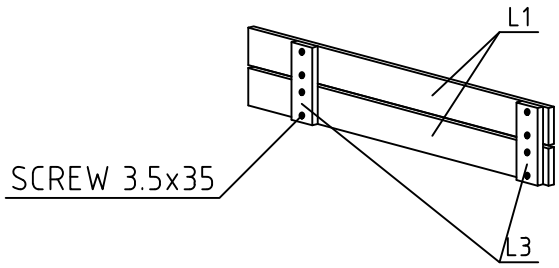

GB2 — 2 — 36x250 — 3640

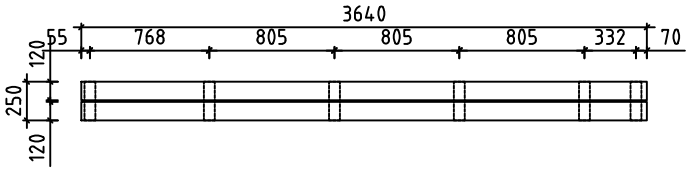

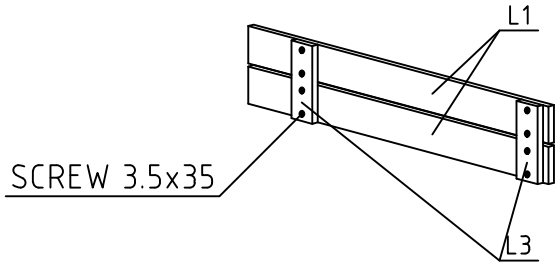

GB3 — 2 — 36x250 — 3040

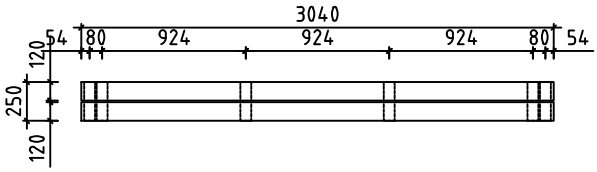

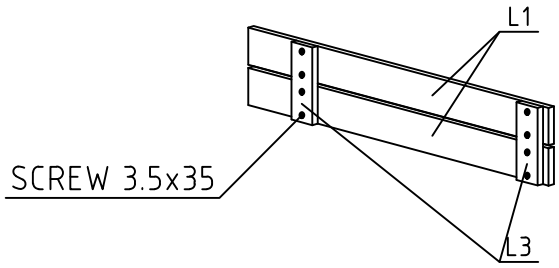

House British 28	Material	File British 28.dwg	Sheet 12

#001	2	5128	1
#002	1	5128	1
#003	1	5128	1
#004	2	5000	15
#005		5000	1
#006	A,B,C	2744	3
#007	A,B,C	2744	3
#008	A,B,C	2744	17
#009	2	2072	1
#010	1	2072	1
#011	1	2072	1
#012	1,2	2000	30
#013	B	597	28