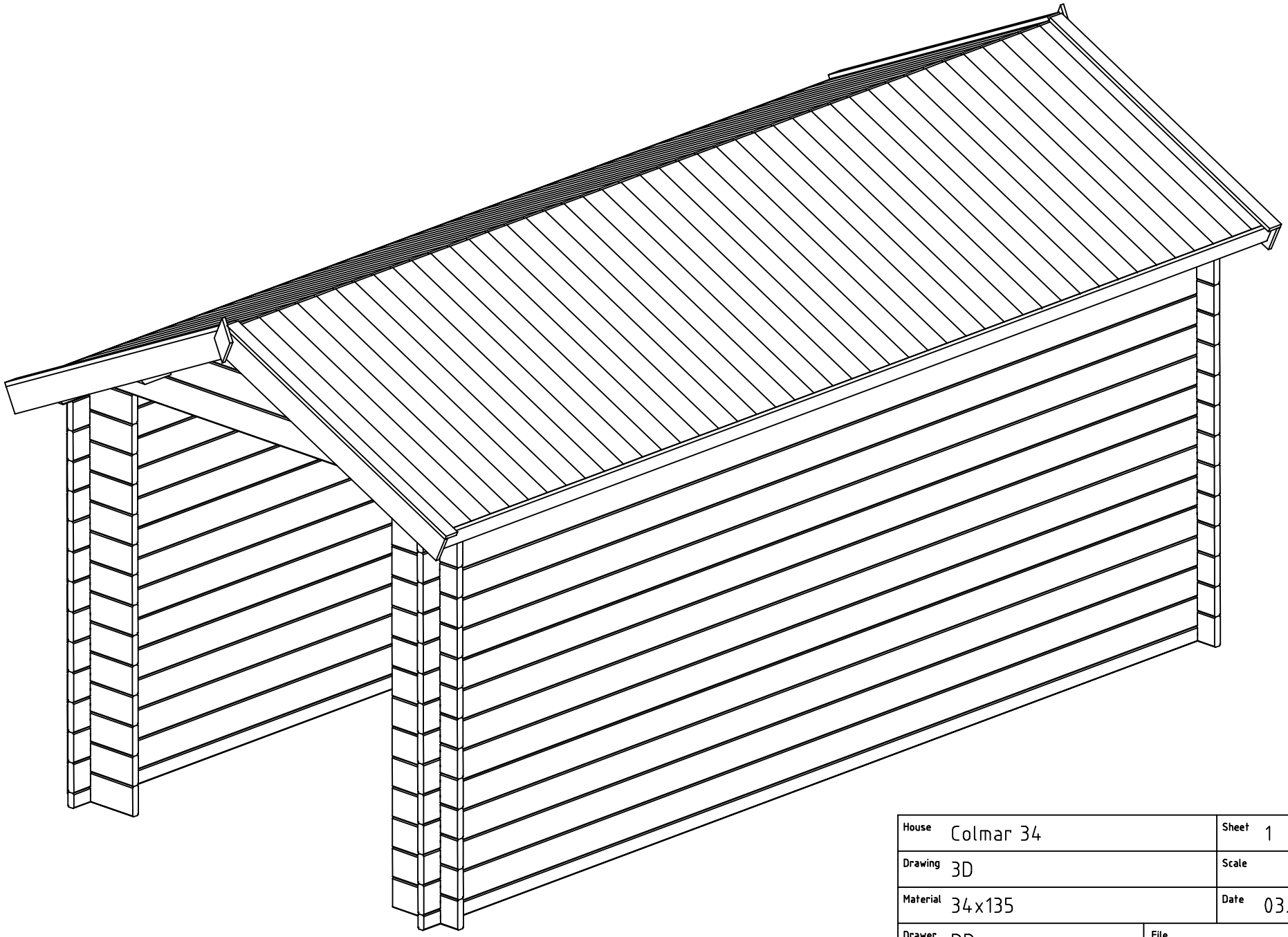

House	Colmar 34	Sheet	1
Drawing	3D	Scale	
Material	34x135	Date	03.07.2019
Drawer	RP	File	Colmar 34 3D.dwg

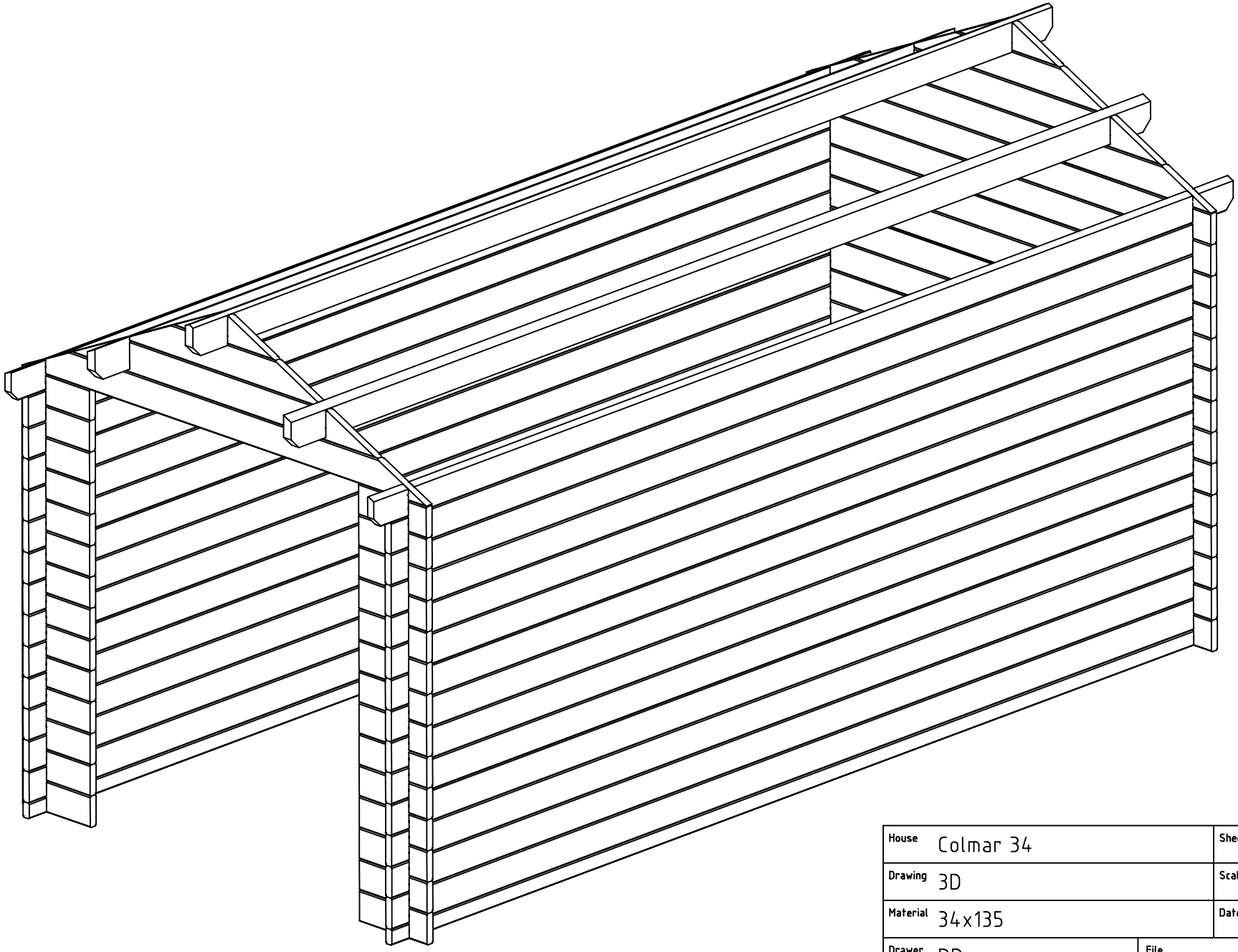

House	Colmar 34	Sheet	2
Drawing	3D	Scale	
Material	34x135	Date	03.07.2019
Drawer	RP	File	Colmar 34 3D.dwg

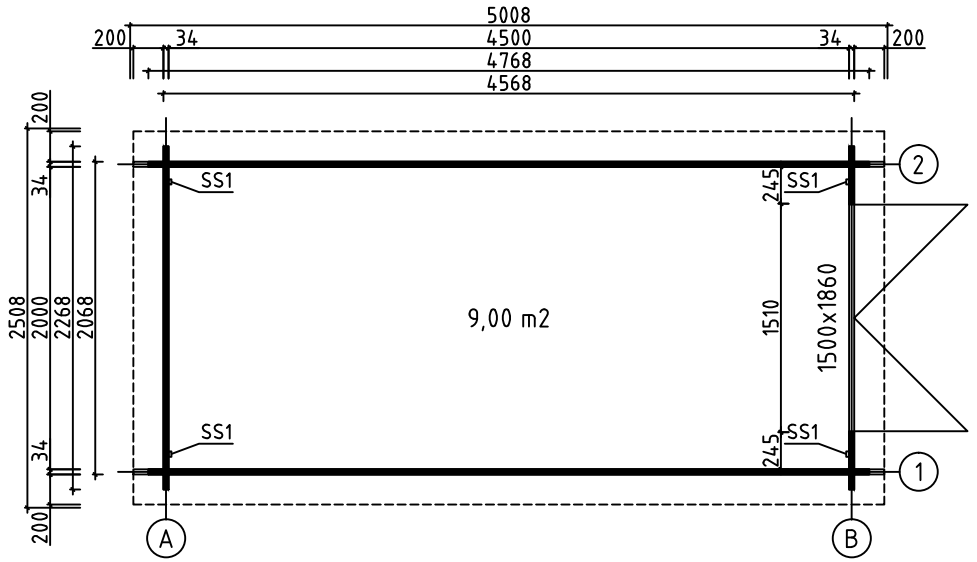

House	Colmar 34	Sheet	3
Drawing	GROUNDPLAN	Scale	1:50
Material	34x135	Date	03.07.2019
Drawer	RP	File	Colmar 34.dwg

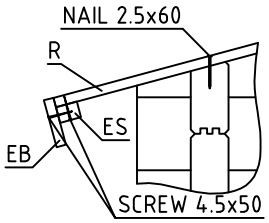

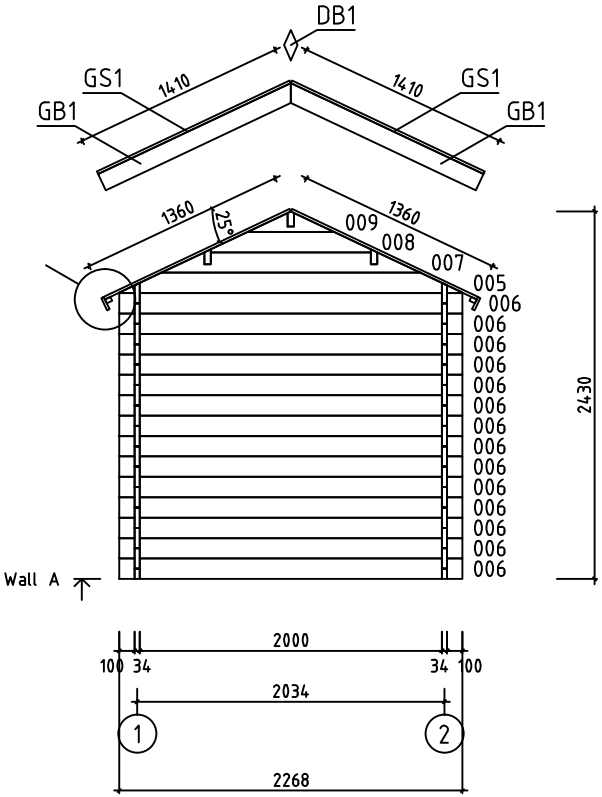

House	Colmar 34	Sheet	4
Drawing	WALL A	Scale	1:50
Material	34x135	Date	03.07.2019
Drawer	RP	File	Colmar 34.dwg

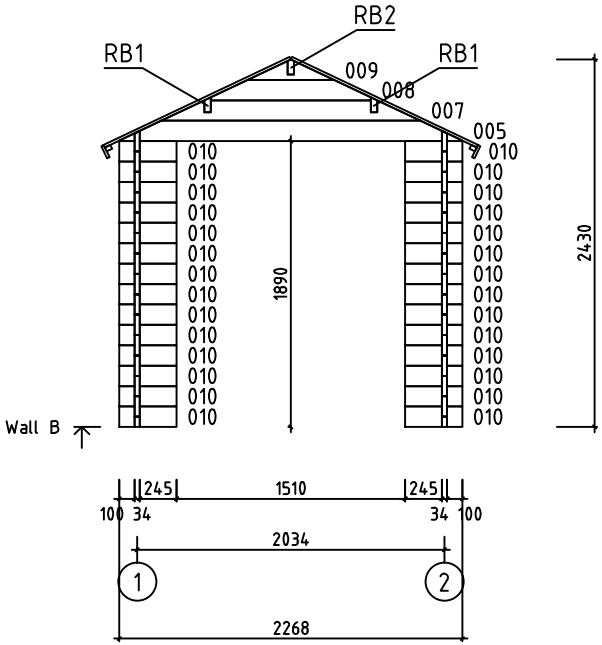

House	Colmar 34	Sheet	5
Drawing	WALL B	Scale	1:50
Material	34x135	Date	03.07.2019
Drawer	RP	File	Colmar 34.dwg

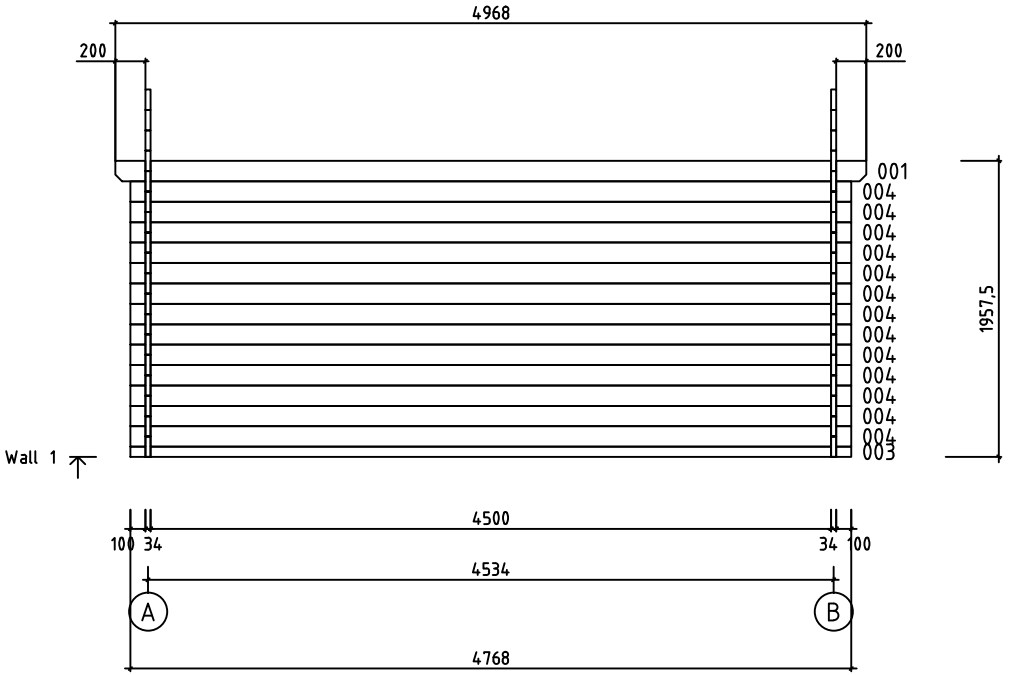

House	Colmar 34	Sheet	6
Drawing	WALL 1	Scale	1:50
Material	34x135	Date	03.07.2019
Drawer	RP	File	Colmar 34.dwg

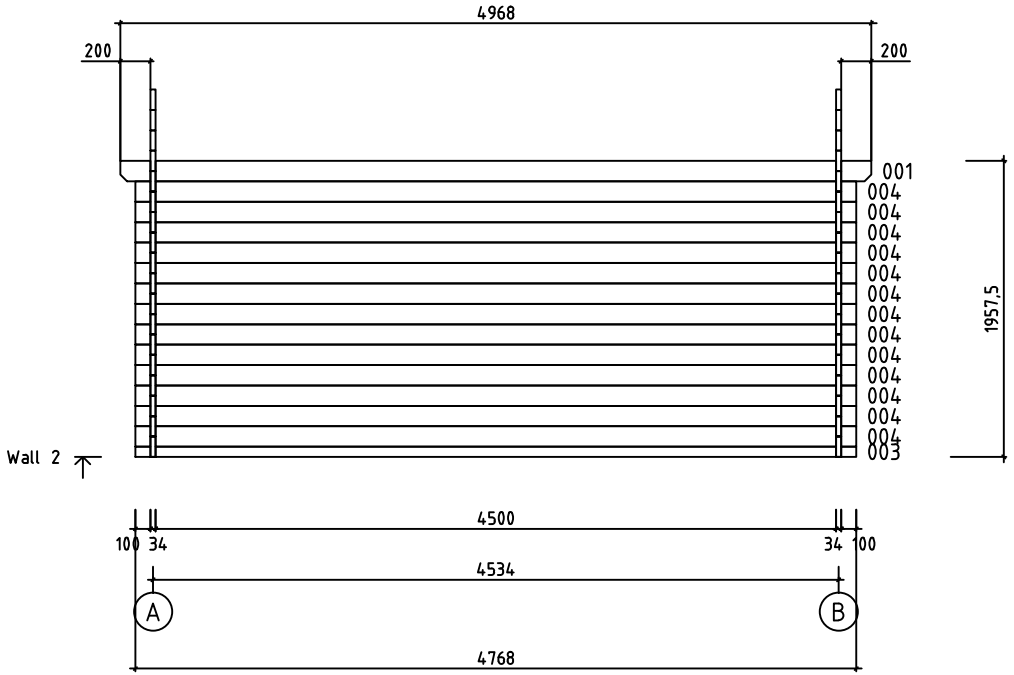

House	Colmar 34	Sheet	7
Drawing	WALL 2	Scale	1:50
Material	34x135	Date	03.07.2019
Drawer	RP	File	Colmar 34.dwg

Pos	Specification-Bestimmung-Spécification	PCS	Profile (mm)	L (mm)
001	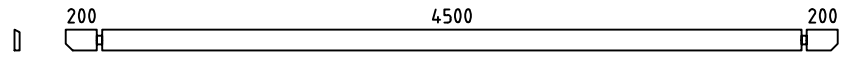	2	34x135	4968
002	SPARE BEAM-ERZATZBOHLE-MADRIER DE RÉSERVE 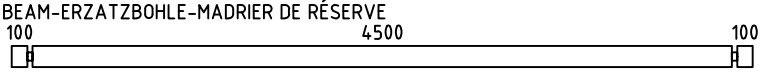	1	34x135	4768
003	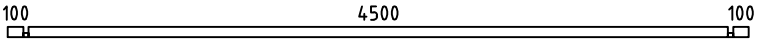	2	34x68	4768
004	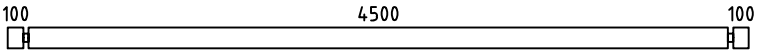	26	34x135	4768
006	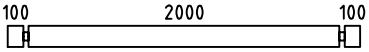	14	34x135	2268
010		28	34x135	379
WA-1 WB-1	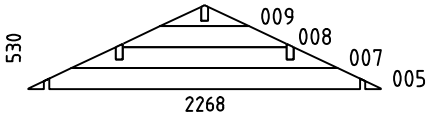	2	34x530	2268
HB	HIT BLOCK-SCHLAGHÖLZER-MADRIERS D´ASSEMBLAGE 	2	34x135	300
RB1	ROOFBEAMS-DACHBALKEN-SOLIVES DE PLAFOND 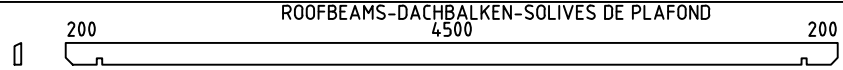	2	43x140	4968
RB2	ROOFBEAMS-DACHBALKEN-SOLIVES DE PLAFOND 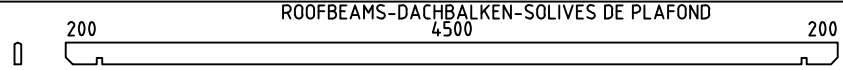	1	43x140	4968
R1	ROOFBOARD-DACHBRETT-VOLIGES or-oder-ou	88+2 114+2	18x114 18x88	1360
GB1	GABLE BOARD-GIEBELBLENDE-PLANCHE DE RIVE 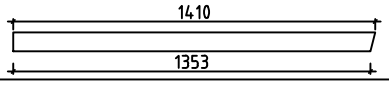	4	18x120	1410
GS1	ROOF FELT FILLET-GIEBELLEISTE-BAGUETTES POUR FIXER LES PLANCHES DE RIVE 	4	18x70	1410
EB1	EAVE BOARD-TRAUFBRETT-LATTES SOUS VOLIGES 	4	18x90	2484
ES1	EAVE SLAT-TRAUFENLEISTE-BAGUETTES POUR FIXER LES LATTES SOUS VOLIGES 	4	30x40	2484
DB1	DIAMOND-RAUTE-ELÉMENTS DE DÉCORATION 	2	18x90	200
SS1	STORM SLAT-STURMLEISTE -BAGUETTE DE TEMPETE TYPE 2	4	18x35	1860
	SCREWS-SCHRAUBEN-VISSER FOR-FÜR-POUR SS1 	8	M8	90
	WASHER-SCHEIBE-RONDELLE FOR-FÜR-POUR SS1 	8	M8	
	NUT-NUSS-ÉCROU FOR-FÜR-POUR SS1 	8	M8	
	NAIL-NAGEL-CLOUS FOR-FÜR-POUR COATING FOR ROOF-BESCHICHTUNG FÜR DACH-REVÉTEMENT DE TOIT	200	⌀2.5	20
	NAIL-NAGEL-CLOUS FOR-FÜR-POUR R1	350	⌀2.5	60
	SCREWS-SCHRAUBEN-VIS FOR-FÜR-POUR GB1, GS1, EB1, ES1, DB1	70	⌀4.5	50
	SCREWS-SCHRAUBEN-VIS FOR-FÜR-POUR RB1, RB2 WA-1, WB-1	22	⌀6.0	160

House Colmar 34	Material	File Colmar 34.dwg	Sheet 8

Pos	Specification-Bestimmung-Spécification	PCS	Profile (mm)	L (mm)
	COATING FOR ROOF-BESCHICHTUNG FÜR DACH-REVÊTEMENT DE TOIT 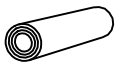	1,0	R = 15m	
	DOUBLEDOOR-DOPPELTÜR-DOUBLE PORTE (right-rechts-droit) AST_PL P	1	1500	1860
	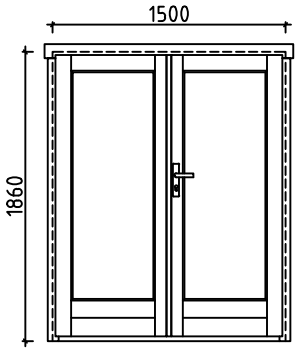			
	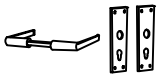	1		
		1		
		1		
		6		

House Colmar 34	Material	File Colmar 34.dwg	Sheet 9

#001	1,2	4968	2
#002		4768	1
#003	1,2	4768	2
#004	1,2	4768	26
#005	A,B	2268	2
#006	A	2268	14
#007	A,B	1714	2
#008	A,B	1057	2
#009	A,B	571	2
#010	B	379	28