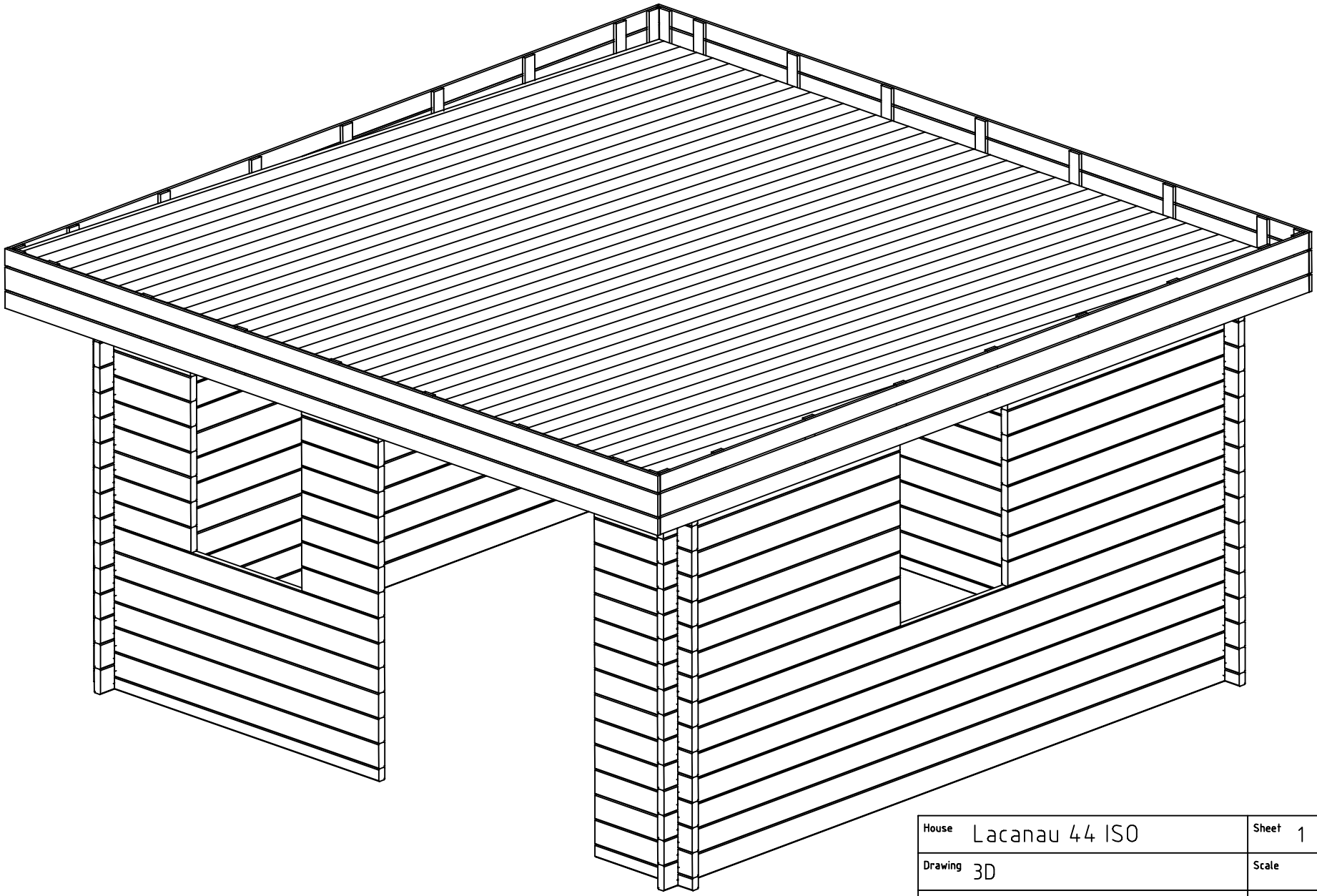

| | | | |
|---|---|---|---|
| House | Lacanau 44 ISO | Sheet | 1 |
| Drawing | 3D | Scale | |
| Material | 44x135 | Date | 18.10.2018 |
| Drawer | RP | File | Lacanau 44 ISO 3D.dwg |

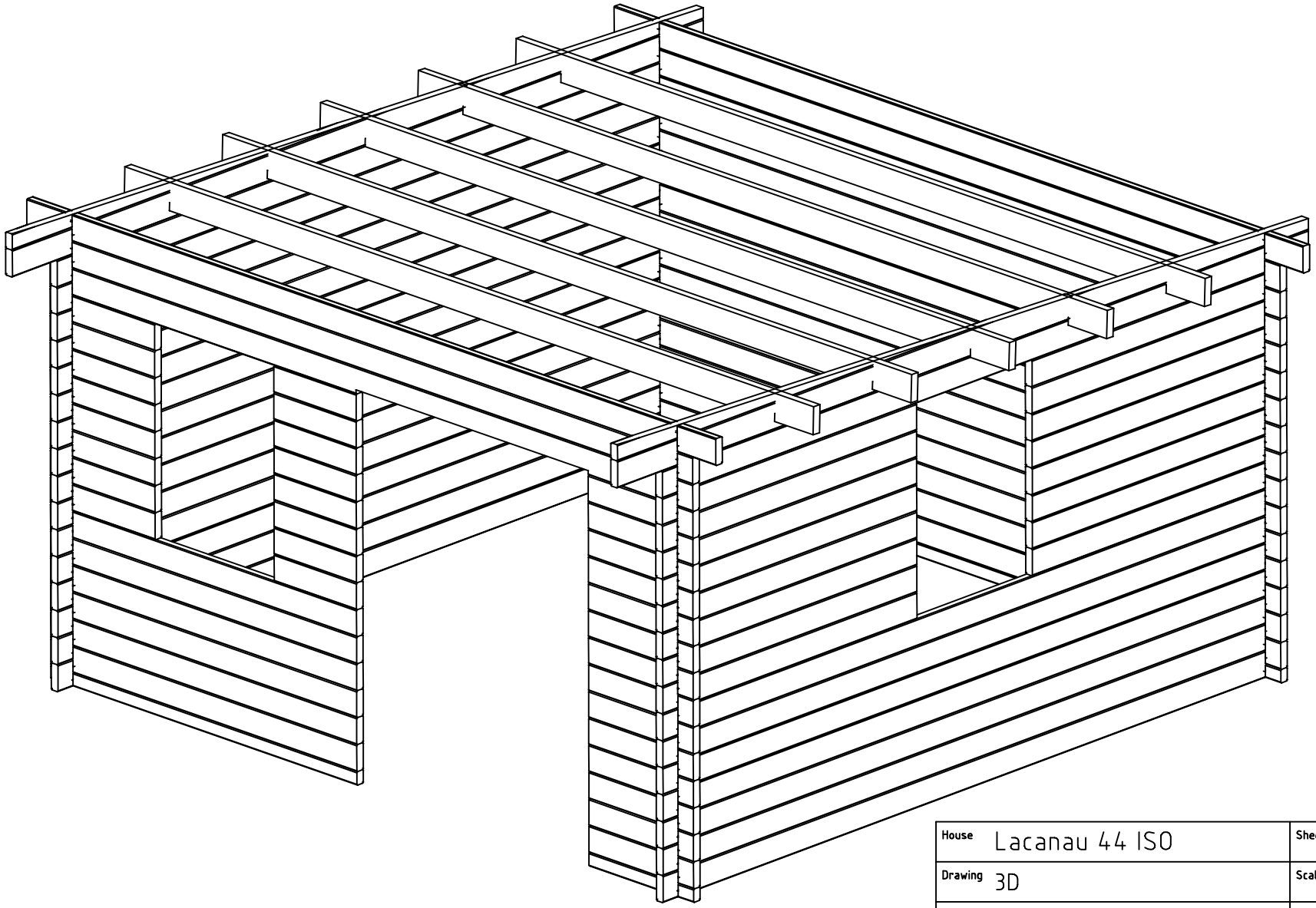

| | | | |
|---|---|---|---|
| House | Lacanau 44 ISO | Sheet | 2 |
| Drawing | 3D | Scale | |
| Material | 44x135 | Date | 18.10.2018 |
| Drawer | RP | File | Lacanau 44 ISO 3D.dwg |

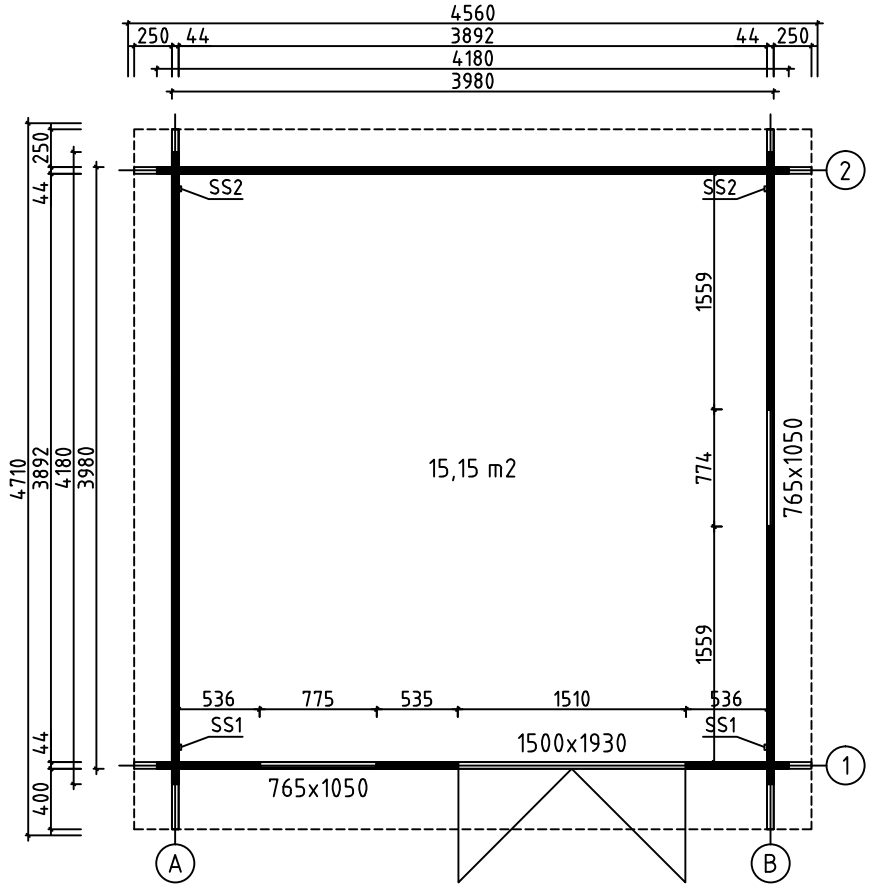


| | | | |
|---|---|---|---|
| House | Lacanau 44 ISO | Sheet | 3 |
| Drawing | GROUNDPLAN | Scale | 1:50 |
| Material | 44x135 | Date | 18.10.2018 |
| Drawer | RP | File | Lacanau 44 ISO.dwg |

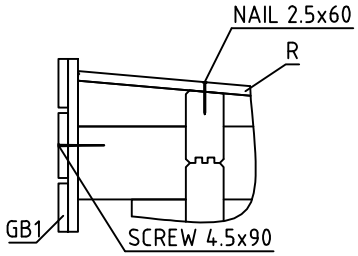


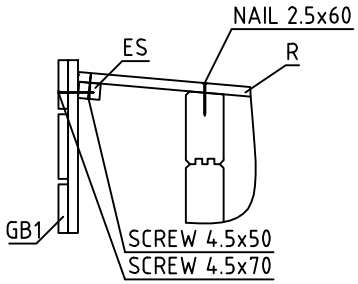


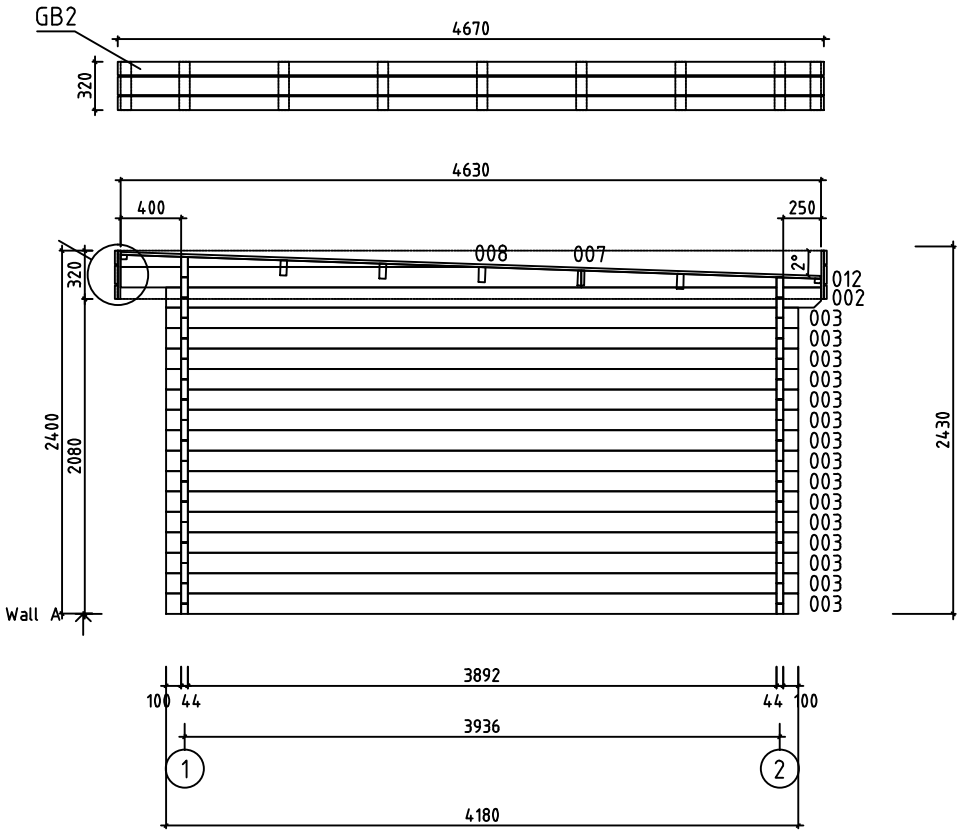


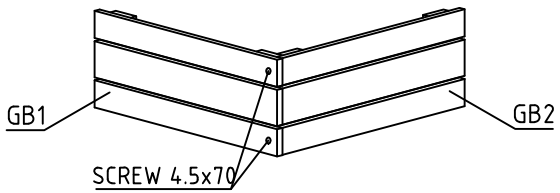


| | | | |
|---|---|---|---|
| House | Lacanau 44 ISO | Sheet | 4 |
| Drawing | WALL A | Scale | 1:50 |
| Material | 44x135 | Date | 18.10.2018 |
| Drawer | RP | File | Lacanau 44 ISO.dwg |

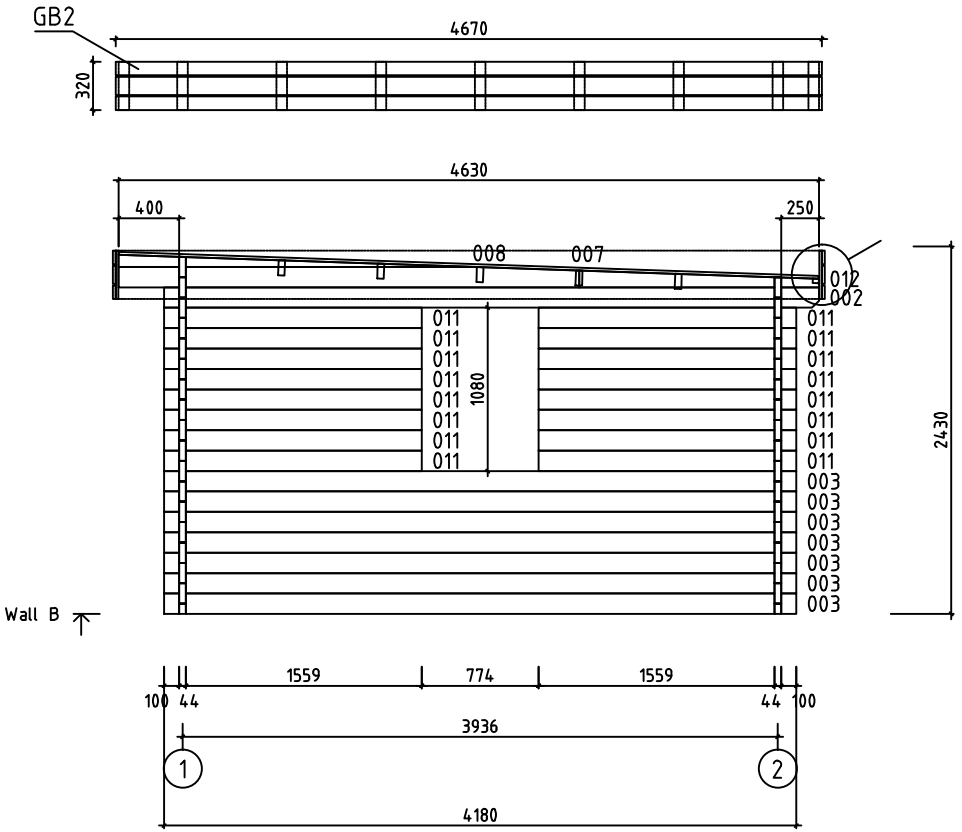


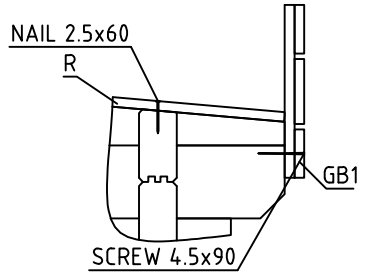


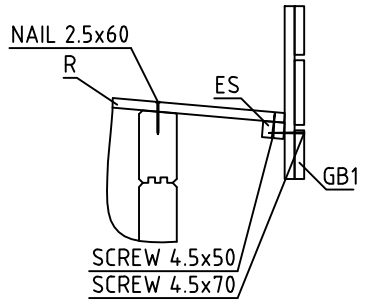


| | | | |
|---|---|---|---|
| House | Lacanau 44 ISO | Sheet | 5 |
| Drawing | WALL B | Scale | 1:50 |
| Material | 44x135 | Date | 18.10.2018 |
| Drawer | RP | File | Lacanau 44 ISO.dwg |

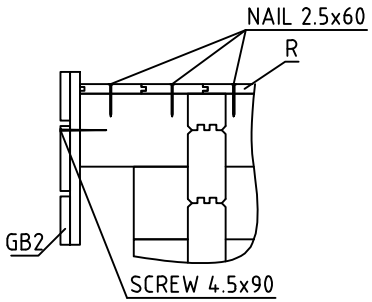


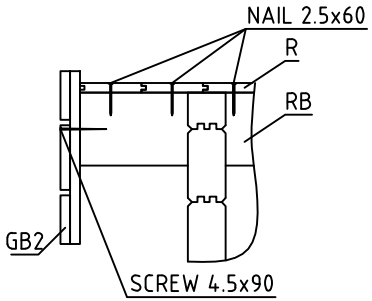


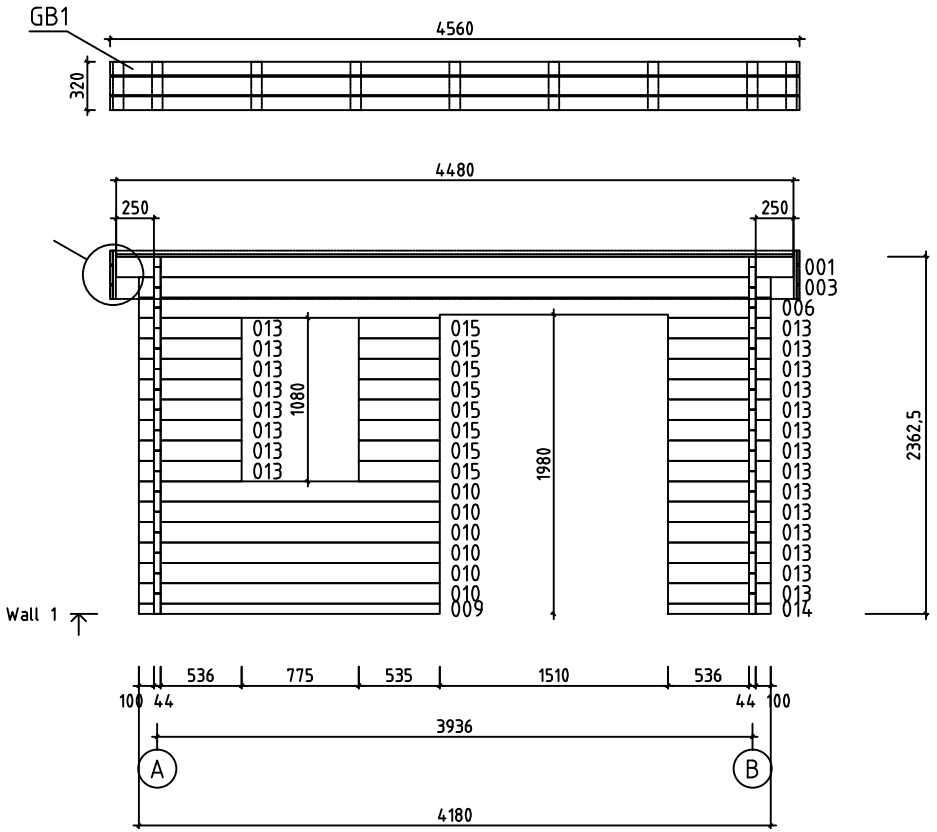


| | | | |
|---|---|---|---|
| House | Lacanau 44 ISO | Sheet | 6 |
| Drawing | WALL 1 | Scale | 1:50 |
| Material | 44x135 | Date | 18.10.2018 |
| Drawer | RP | File | Lacanau 44 ISO.dwg |

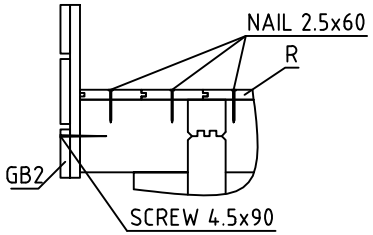


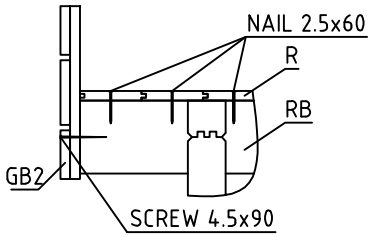


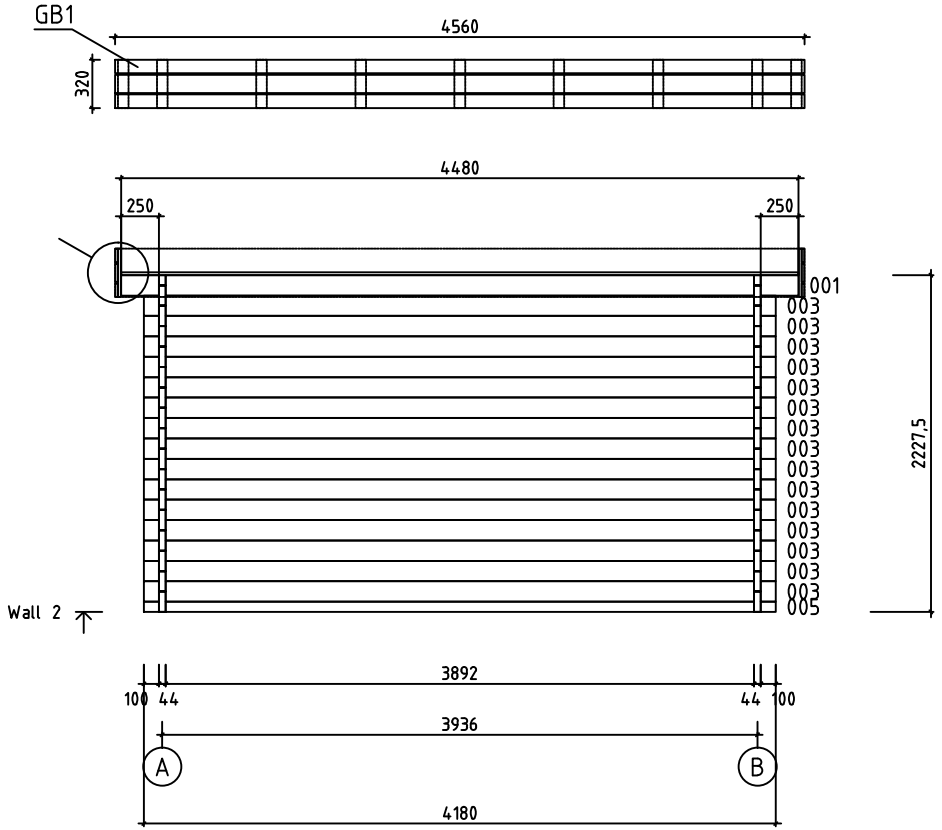


| | | | |
|---|---|---|---|
| House | Lacanau 44 ISO | Sheet | 7 |
| Drawing | WALL 2 | Scale | 1:50 |
| Material | 44x135 | Date | 18.10.2018 |
| Drawer | RP | File | Lacanau 44 ISO.dwg |

| Pos | Specification-Bestimmung-Spécification | PCS | Profile (mm) | L (mm) |
|---|---|---|---|---|
| 001 | 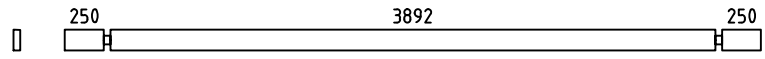 | 2 | 44x135 | 4480 |
| 003 | 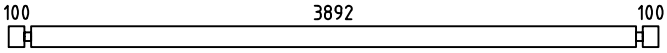 | 38 | 44x135 | 4180 |
| 004 | SPARE BEAM-ERZATZBOHLE-MADRIER DE RÉSERVE  | 1 | 44x135 | 4180 |
| 005 | 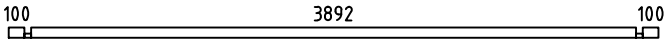 | 1 | 44x68 | 4180 |
| 006 | 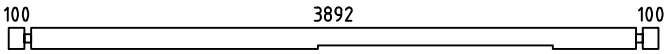 | 1 | 44x135 | 4180 |
| 009 | 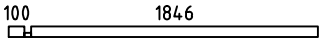 | 1 | 44x68 | 1990 |
| 010 | 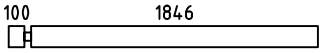 | 6 | 44x135 | 1990 |
| 011 | 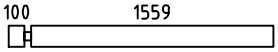 | 16 | 44x135 | 1703 |
| 013 | 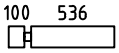 | 22 | 44x135 | 680 |
| 014 | 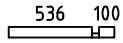 | 1 | 44x68 | 680 |
| 015 |  | 8 | 44x135 | 535 |
| WA-1<br>WB-1 | 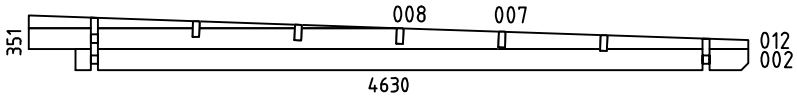 | 2 | 44x351 | 4630 |
| HB | HIT BLOCK-SCHLAGHÖLZER-MADRIERS D´ASSEMBLAGE  | 2 | 44x135 | 300 |
| RB1 | ROOFBEAMS-DACHBALKEN-SOLIVES DE PLAFOND 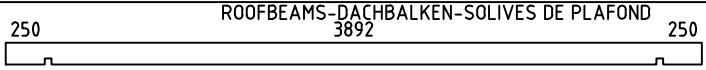 | 5 | 43x140 | 4480 |
| R1 | ROOFBOARD-DACHBRETT-VOLIGES  or-oder-ou | 40+1<br>52+1 | 18x114<br>18x88 | 4630 |
| GB1 | 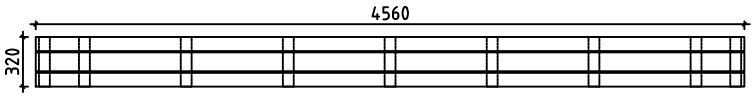 | 2 | 36x320 | 4560 |
| GB2 | 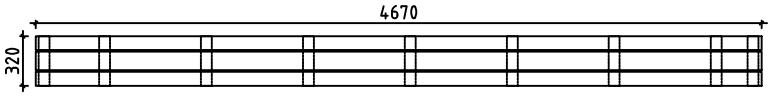 | 2 | 36x320 | 4670 |
| ES1 | EAVE SLAT-TRAUFENLEISTE-BAGUETTES POUR FIXER LES LATTES SOUS VOLIGES  | 2 | 30x40 | 3890 |
| ES2 | EAVE SLAT-TRAUFENLEISTE-BAGUETTES POUR FIXER LES LATTES SOUS VOLIGES  | 4 | 30x40 | 250 |
| SS1 | STORM SLAT-STURMLEISTE -BAGUETTE DE TEMPETE  TYPE 2 | 2 | 18x35 | 2190 |
| SS2 | STORM SLAT-STURMLEISTE -BAGUETTE DE TEMPETE  TYPE 2 | 2 | 18x35 | 2060 |
| | SCREWS-SCHRAUBEN-VISSER FOR-FÜR-POUR SS1, SS2  | 8 | M8 | 90 |

| House Lacanau 44 ISO | Material | File Lacanau 44 ISO.dwg | Sheet 8 |
|---|---|---|---|

| Pos | Specification-Bestimmung-Spécification | PCS | Profile (mm) | L (mm) |
|---|---|---|---|---|
| | WASHER-SCHEIBE-RONDELLE<br>FOR-FÜR-POUR SS1, SS2 | 8 | M8 | |
| | NUT-NUSS-ÉCROU<br>FOR-FÜR-POUR SS1, SS2 | 8 | M8 | |
| | NAIL-NAGEL-CLOUS COATING FOR ROOF-BESCHICHTUNG<br>FOR-FÜR-POUR FÜR DACH-REVÉTEMENT DE TOIT | 270 | ϕ2.5 | 20 |
| | NAIL-NAGEL-CLOUS<br>FOR-FÜR-POUR R1 | 370 | ϕ2.5 | 60 |
| | SCREWS-SCHRAUBEN-VIS<br>FOR-FÜR-POUR ES1, ES2 | 30 | ϕ4.5 | 50 |
| | SCREWS-SCHRAUBEN-VIS<br>FOR-FÜR-POUR GB1, GB2 | 20 | ϕ4.5 | 70 |
| | SCREWS-SCHRAUBEN-VIS<br>FOR-FÜR-POUR GB1, GB2 | 20 | ϕ4.5 | 90 |
| | SCREWS-SCHRAUBEN-VIS<br>FOR-FÜR-POUR WA-1, WB-1, RB1 | 30 | ϕ6.0 | 160 |
| | COATING FOR ROOF-BESCHICHTUNG FÜR DACH-REVÉTEMENT DE TOIT | 2,0 | R = 15m | |
| | DOUBLEDOOR-DOPPELTÜR-DOUBLE PORTE (right-rechts-droit) AST__ISO__PL P | 1 | 1500 | 1930 |
| | | 1 | | |
| | | 1 | | |
| | | 1 | | |
| | | 6 | | |
| | WINDOW-FENSTER-FENÉTRE (right-rechts-droit) AST__ISO__KP__AL__PL P | 2 | 765 | 1050 |
| | | 2 | | |
| | | 2 | | |

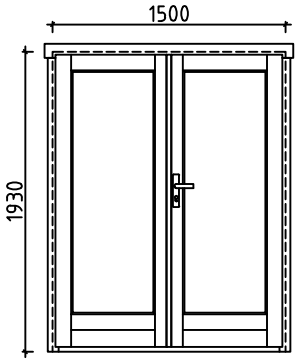


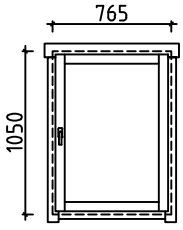

| | | | |
|---|---|---|---|
| #001 | 1,2 | 4480 | 2 |
| #002 | A,B | 4330 | 2 |
| #003 | 1,2,A,B | 4180 | 38 |
| #004 | | 4180 | 1 |
| #005 | 2 | 4180 | 1 |
| #006 | 1 | 4180 | 1 |
| #007 | A,B | 3045 | 2 |
| #008 | A,B | 2368 | 2 |
| #009 | 1 | 1990 | 1 |
| #010 | 1 | 1990 | 6 |
| #011 | B | 1703 | 16 |
| #012 | A,B | 1585 | 2 |
| #013 | 1 | 680 | 22 |
| #014 | 1 | 680 | 1 |
| #015 | 1 | 535 | 8 |