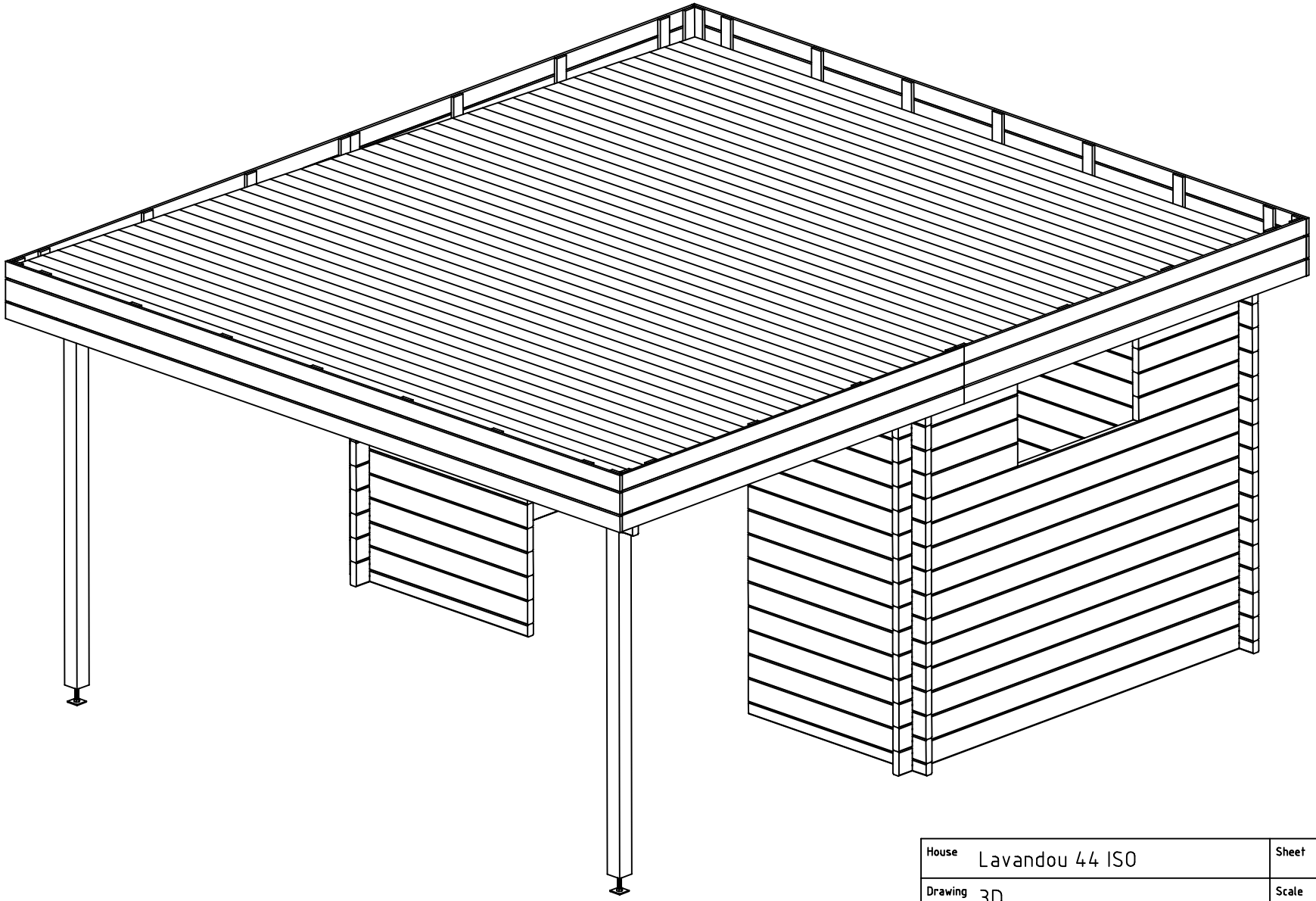

House	Lavandou 44 ISO	Sheet	1
Drawing	3D	Scale	
Material	44x135	Date	05.10.2021
Drawer	RP	File	Lavandou 44 ISO 3D.dwg

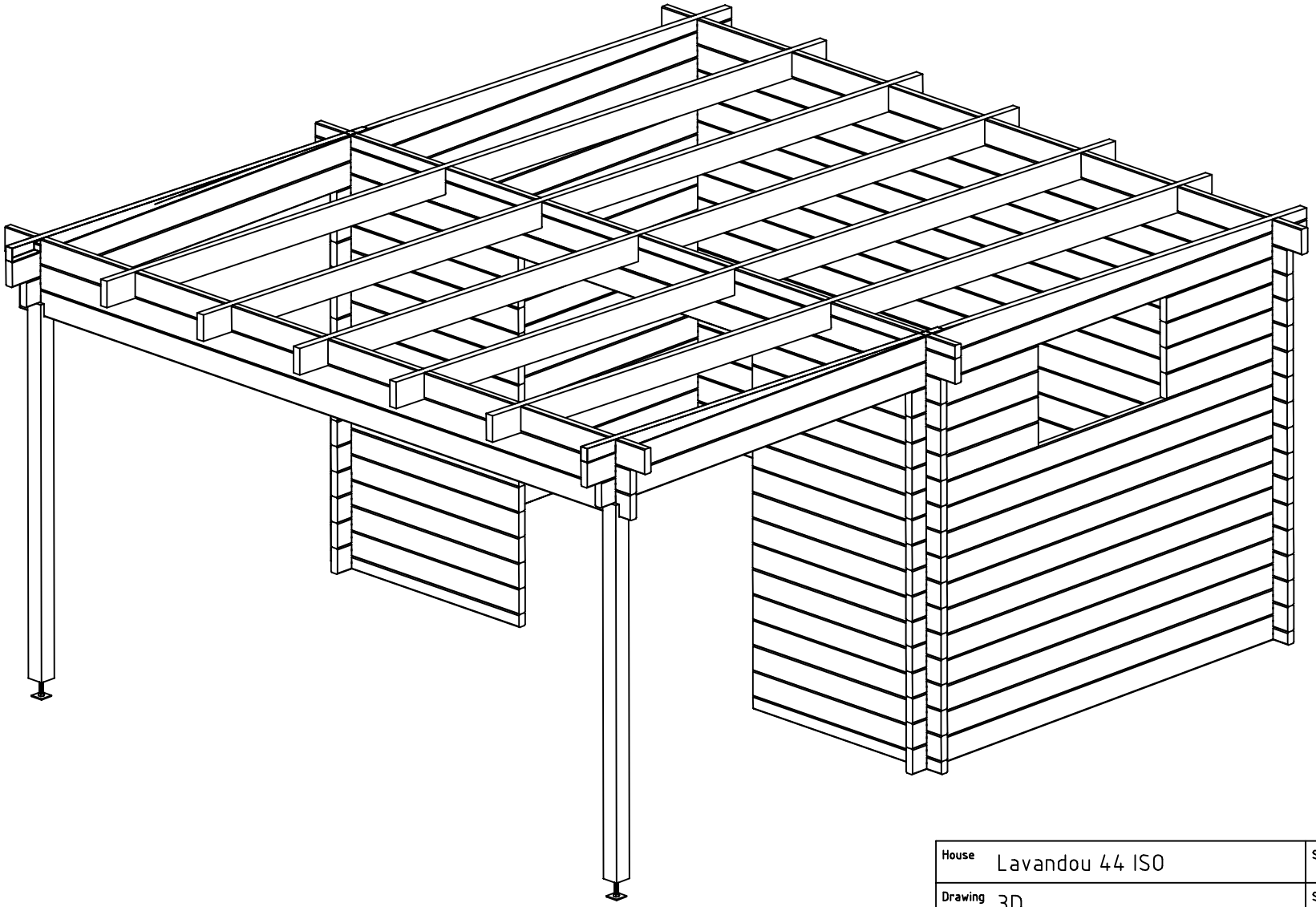

House	Lavandou 44 ISO	Sheet	2
Drawing	3D	Scale	
Material	44x135	Date	05.10.2021
Drawer	RP	File	Lavandou 44 ISO 3D.dwg

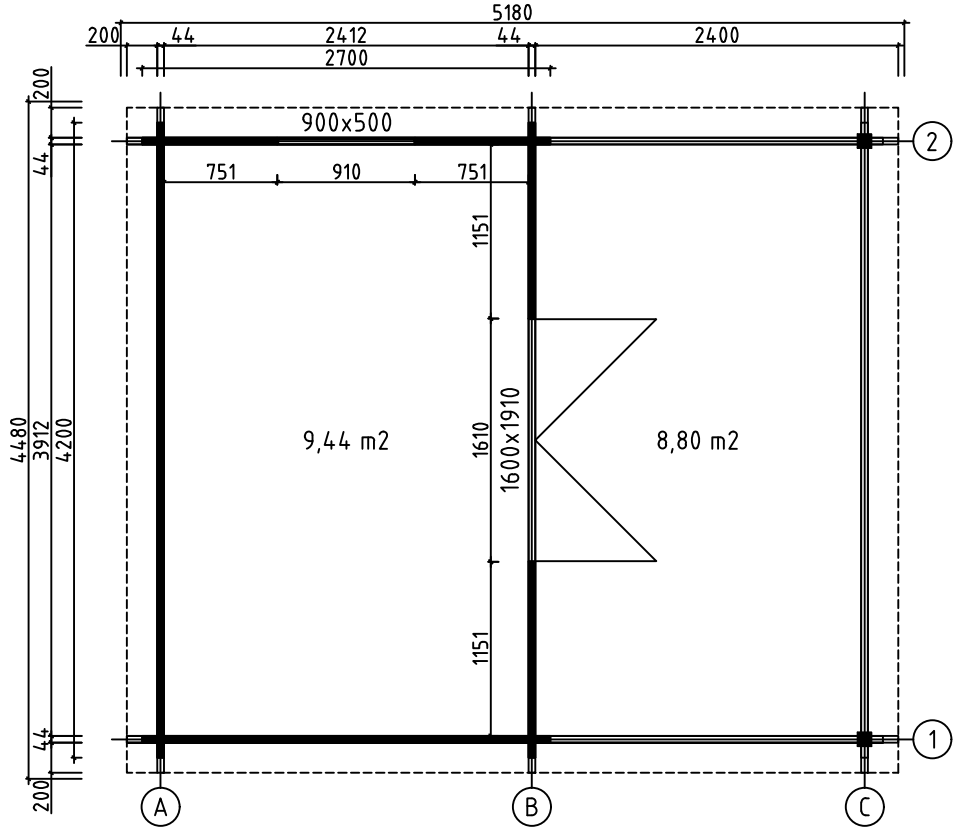

House	Lavandou 44 ISO	Sheet	3
Drawing	GROUNDPLAN	Scale	1:50
Material	44x135	Date	05.10.2021
Drawer	RP	File	Lavandou 44 ISO.dwg

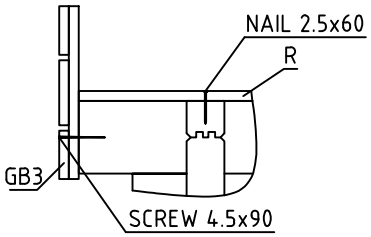

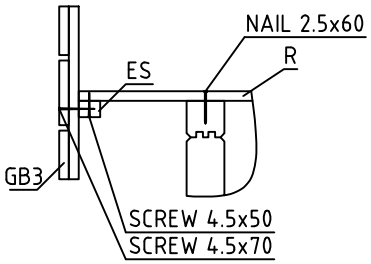

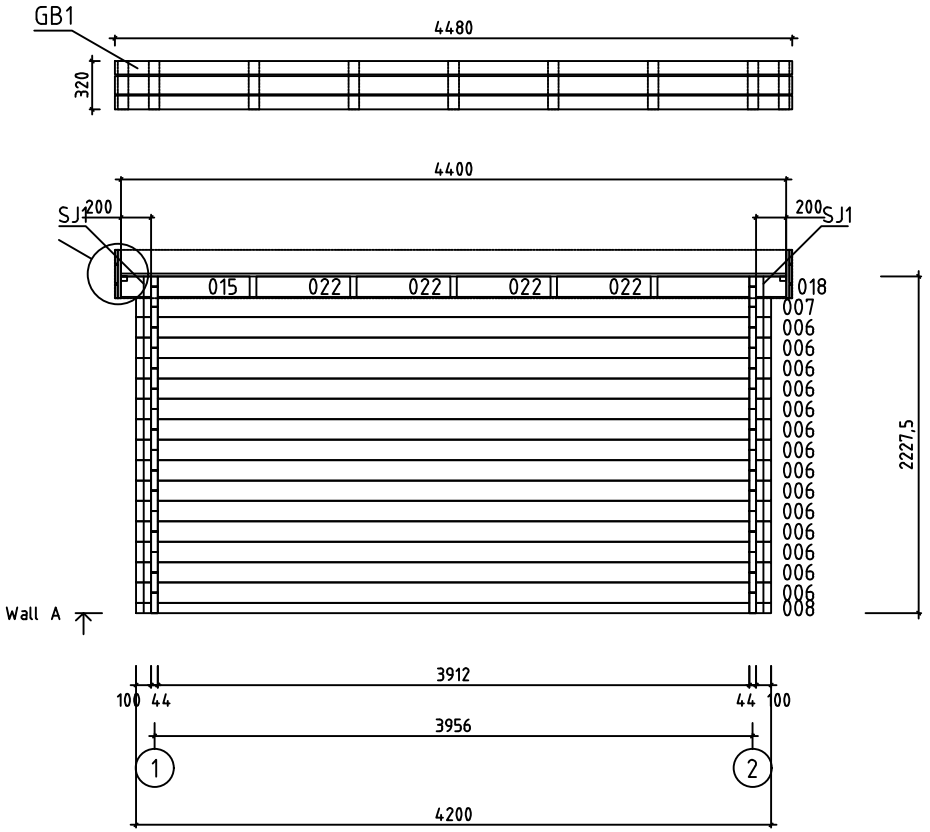

House	Lavandou 44 ISO	Sheet	4
Drawing	WALL A	Scale	1:50
Material	44x135	Date	05.10.2021
Drawer	RP	File	Lavandou 44 ISO.dwg

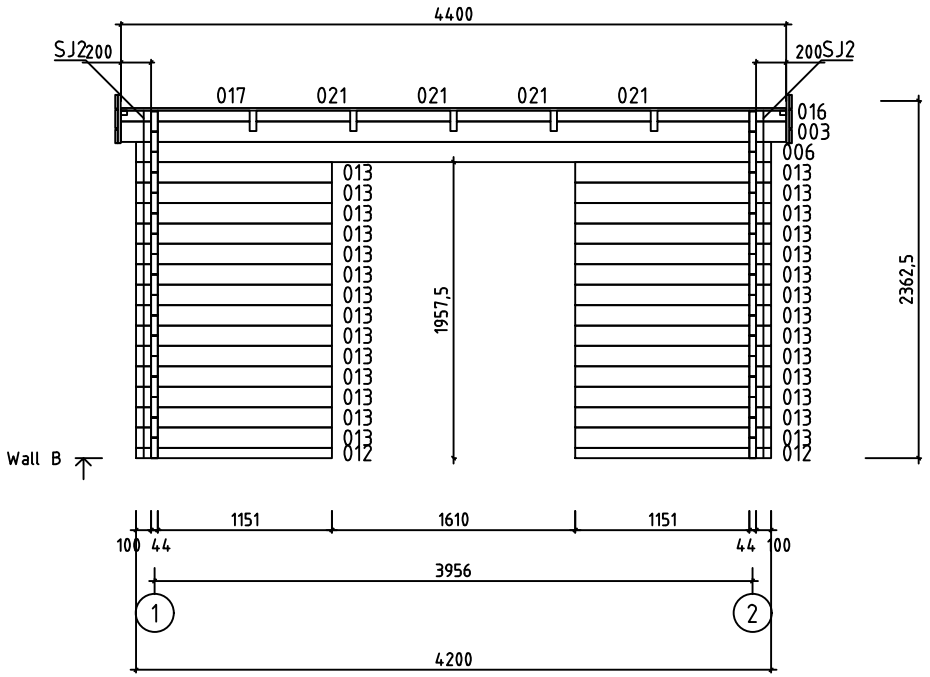

House	Lavandou 44 ISO	Sheet	5
Drawing	WALL B	Scale	1:50
Material	44x135	Date	05.10.2021
Drawer	RP	File	Lavandou 44 ISO.dwg

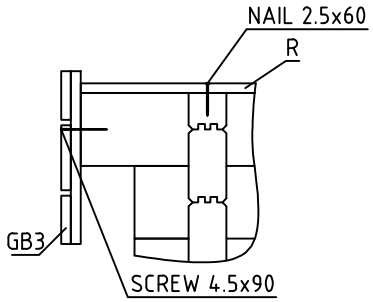

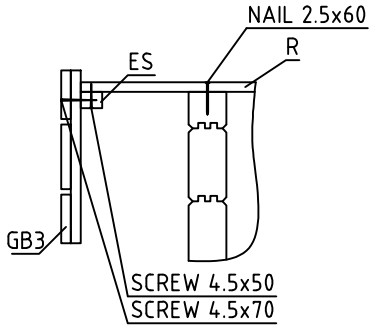

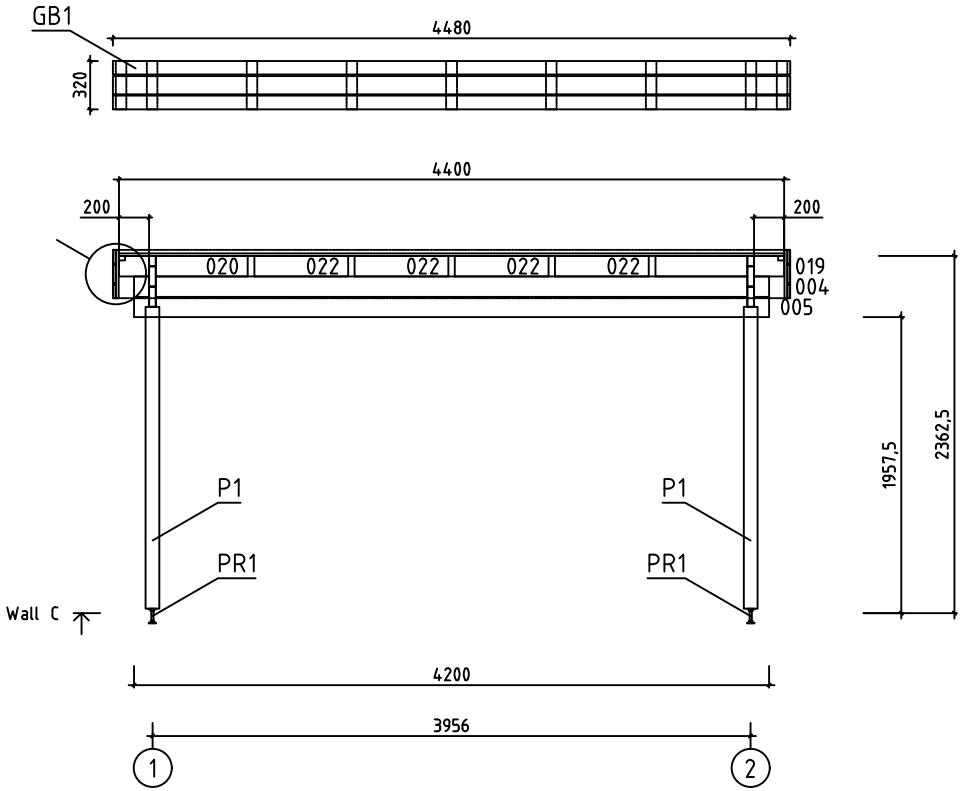

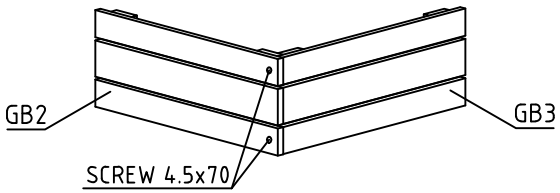

House	Lavandou 44 ISO	Sheet	6
Drawing	WALL C	Scale	1:50
Material	44x135	Date	05.10.2021
Drawer	RP	File	Lavandou 44 ISO.dwg

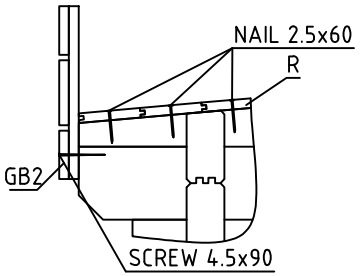

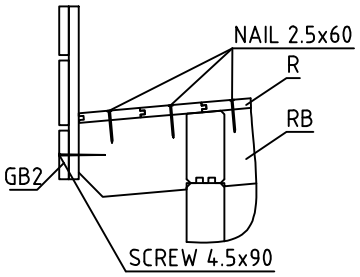

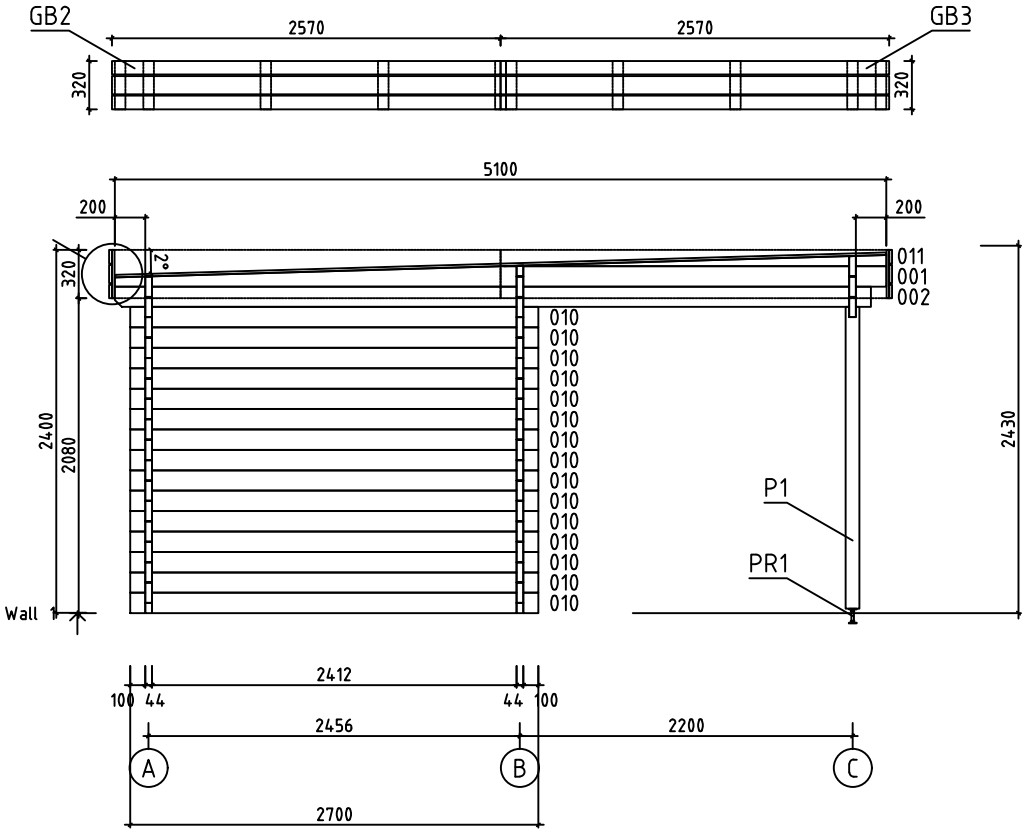

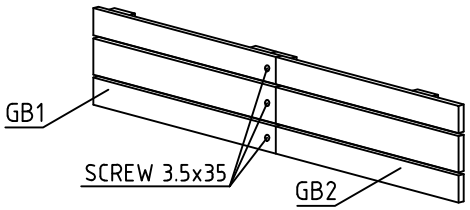

House	Lavandou 44 ISO	Sheet	7
Drawing	WALL 1	Scale	1:50
Material	44x135	Date	05.10.2021
Drawer	RP	File	Lavandou 44 ISO.dwg

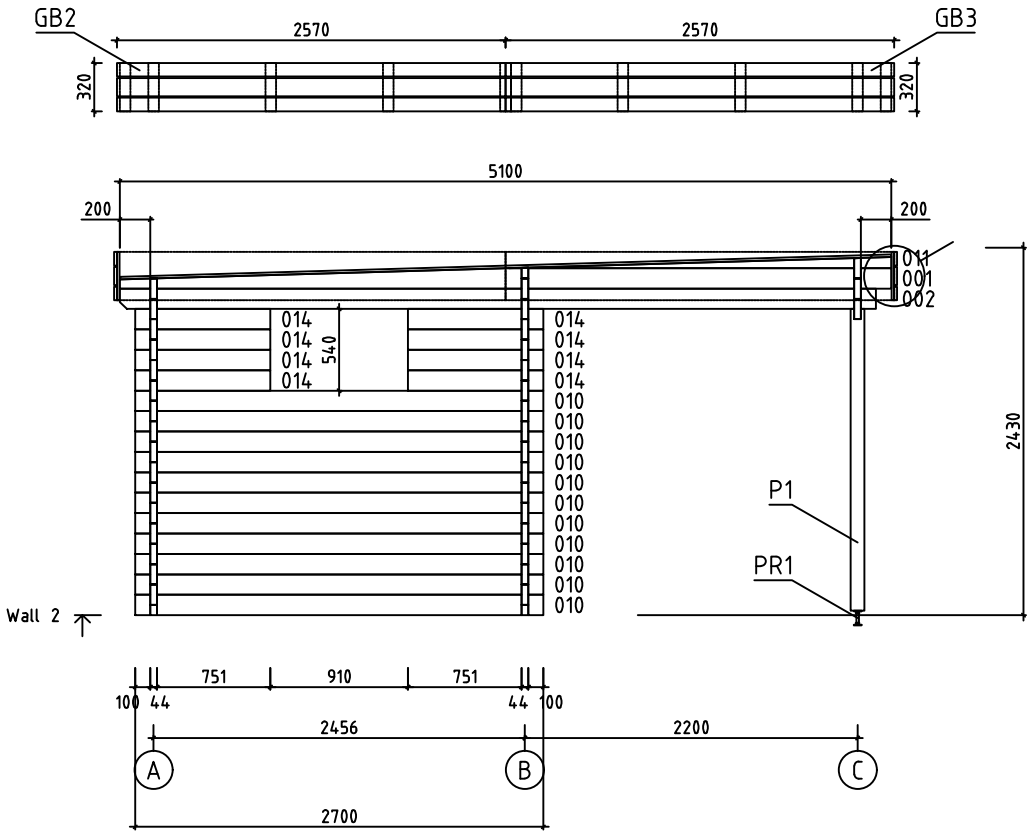

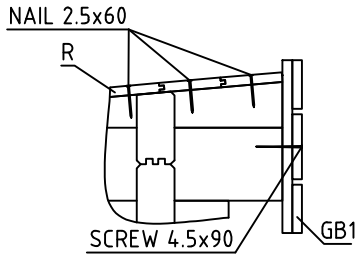

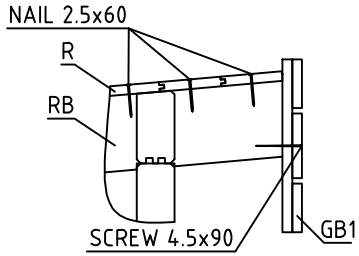

House	Lavandou 44 ISO	Sheet	8
Drawing	WALL 2	Scale	1:50
Material	44x135	Date	05.10.2021
Drawer	RP	File	Lavandou 44 ISO.dwg

Pos	Specification-Bestimmung-Spécification	PCS	Profile (mm)	L (mm)
002	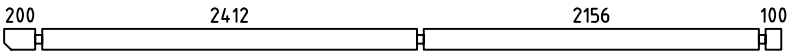	2	44x135	5000
003	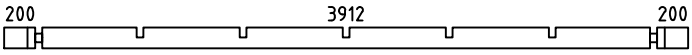	1	44x135	4400
004	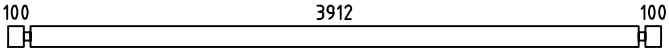 PM	1	44x135	4200
005	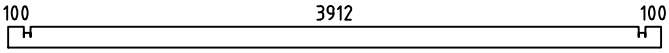	1	44x135	4200
006	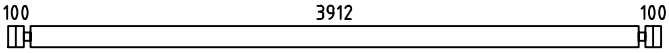	15	44x135	4200
007	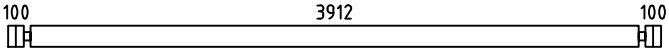 PM	1	44x135	4200
008	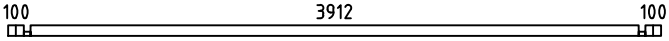	1	44x68	4200
009	SPARE BEAM-ERZATZBOHLE-MADRIER DE RÉSERVE 	1	44x135	4200
010	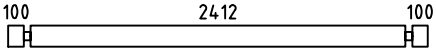	26	44x135	2700
012	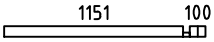	2	44x68	1295
013	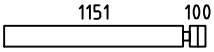	28	44x135	1295
014	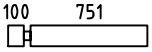	8	44x135	895
015	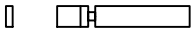	1	44x135	853
016	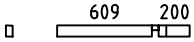	1	44x71	853
017	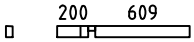	1	44x71	853
018	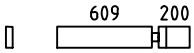	1	44x135	853
019	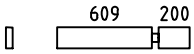	1	44x135	852
020	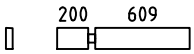	1	44x135	852
021		4	44x71	620
022	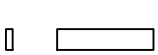	8	44x135	620
W1-1 W2-1	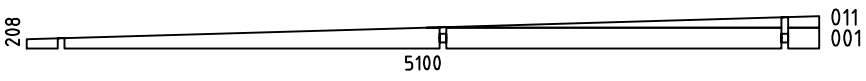	2	44x208	5100
HB	HIT BLOCK-SCHLAGHÖLZER-MADRIERS D´ASSEMBLAGE 	2	44x135	300
P1	POST-PFOSTEN-POTEAU 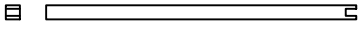	2	90x90	1995
RB1	ROOFBEAMS-DACHBALKEN-SOLIVES DE PLAFOND 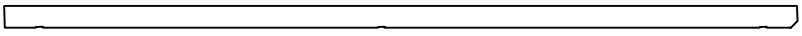	5	43x140	5106

House Lavandou 44 ISO	Material	File Lavandou 44 ISO.dwg	Sheet 9

Pos	Specification-Bestimmung-Spécification	PCS	Profile (mm)	L (mm)
R1	ROOFBOARD-DACHBRETT-VOLIGES  or-oder-ou	45+1 59+1	18x114 18x88	4400
GB1	ASSEMBLY REQUIRED-MONTAGE ERFORDERLICH-ASSEMBLAGE REQUIS 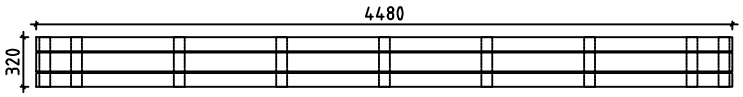	2	36x320	4480
GB2	ASSEMBLY REQUIRED-MONTAGE ERFORDERLICH-ASSEMBLAGE REQUIS 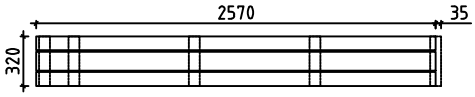	2	36x320	2570 +35
GB3	ASSEMBLY REQUIRED-MONTAGE ERFORDERLICH-ASSEMBLAGE REQUIS 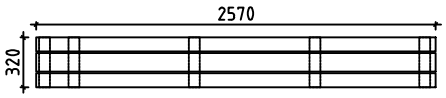	2	36x320	2570
ES1	EAVE SLAT-TRAUFENLEISTE-BAGUETTES POUR FIXER LES LATTES SOUS VOLIGES 	2	30x40	2410
ES2	EAVE SLAT-TRAUFENLEISTE-BAGUETTES POUR FIXER LES LATTES SOUS VOLIGES 	2	30x40	2155
ES3	EAVE SLAT-TRAUFENLEISTE-BAGUETTES POUR FIXER LES LATTES SOUS VOLIGES 	4	30x40	200
SJ1	SCREW JOINT-GEWINDESTANGE -TIGES FILETÉS	2	ØM10	2260
SJ2	SCREW JOINT-GEWINDESTANGE -TIGES FILETÉS	2	ØM10	2330
PR1	POST REGULATOR-PFOSTEN REGLER- PIED MÉTALLIQUE RÉGLABLE POUR POTEAU 	2		
	NAIL-NAGEL-CLOUS FOR-FÜR-POUR COATING FOR ROOF-BESCHICHTUNG FÜR DACH-REVÉTEMENT DE TOIT	310	Ø2.5	20
	NAIL-NAGEL-CLOUS FOR-FÜR-POUR R1	420	Ø2.5	60
	SCREWS-SCHRAUBEN-VIS FOR-FÜR-POUR GB1, GB2, GB3	234	Ø3.5	35
	SCREWS-SCHRAUBEN-VIS FOR-FÜR-POUR ES1, ES2, ES3, P1, PR1	50	Ø4.5	50
	SCREWS-SCHRAUBEN-VIS FOR-FÜR-POUR GB1, GB2, GB3	20	Ø4.5	70
	SCREWS-SCHRAUBEN-VIS FOR-FÜR-POUR 016, 017, 021 GB1, GB2, GB3	30	Ø4.5	90
	SCREWS-SCHRAUBEN-VIS FOR-FÜR-POUR 015, 018, 019, 020, 022 W1-1, W2-1, RB1 	50	Ø6.0	160
	COATING FOR ROOF-BESCHICHTUNG FÜR DACH-REVÉTEMENT DE TOIT 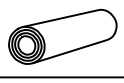	2,0	R = 15m	

House Lavandou 44 ISO	Material	File Lavandou 44 ISO.dwg	Sheet 10

Pos	Specification-Bestimmung-Spécification	PCS	Profile (mm)	L (mm)
	DOUBLEDOOR-DOPPELTÜR-DOUBLE PORTE (right-rechts-droit) ORT_ECO P	1	1600	1910
	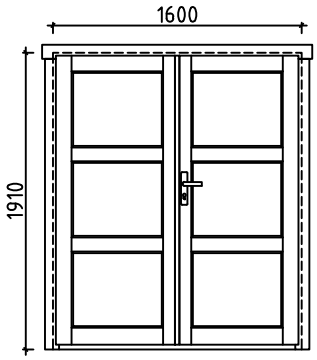 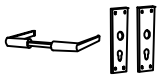	1		
		1		
		1		
		6		
	WINDOW-FENSTER-FENÉTRE (right-rechts-droit) ORT_ECO P	1	900	500
	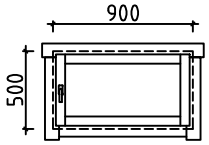 	1		
	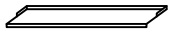	1		

House Lavandou 44 ISO	Material	File Lavandou 44 ISO.dwg	Sheet 11

Pos	Assembly Instructions-Montageanleitungen-Instructions de Montage	PCS	Profile (mm)	L (mm)
L1	BOARD-BRETT-PLANCHE	2	18x120	4480
L2	BOARD-BRETT-PLANCHE	4	18x90	4480
L3	BOARD-BRETT-PLANCHE	4	18x120	2570
L4	BOARD-BRETT-PLANCHE	8	18x90	2570
L5	BOARD-BRETT-PLANCHE	38	18x70	320

GB1 — 2 — 36x320 — 4480

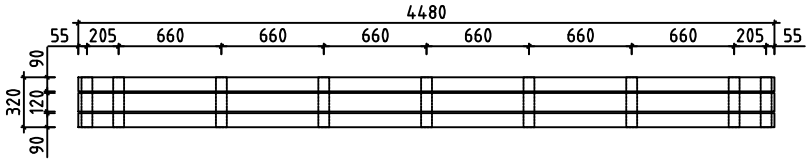

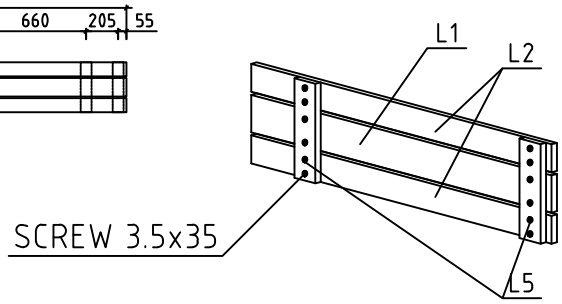

GB2 — 2 — 36x320 — 2570 +35

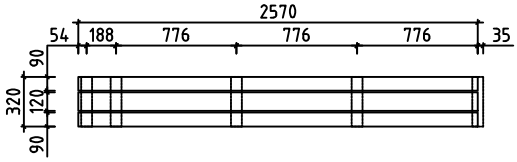

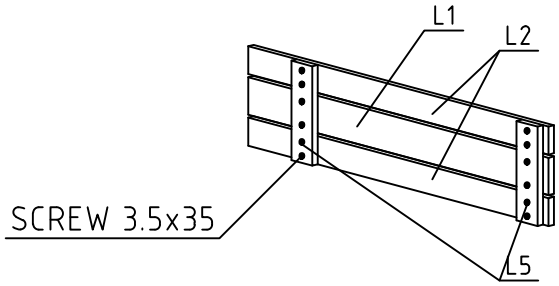

GB3 — 2 — 36x320 — 2570

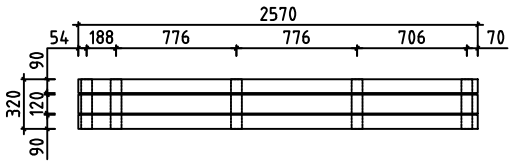

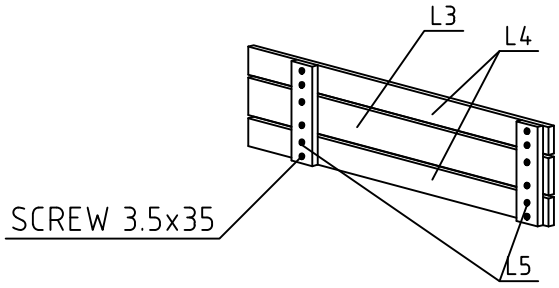

House Lavandou 44 ISO	Material	File Lavandou 44 ISO.dwg	Sheet 12

#001	1,2	5100	2
#002	1,2	5000	2
#003	B	4400	1
#004	C	4200	1
#005	C	4200	1
#006	A,B	4200	15
#007	A	4200	1
#008	A	4200	1
#009		4200	1
#010	1,2	2700	26
#011	1,2	2528	2
#012	B	1295	2
#013	B	1295	28
#014	2	895	8
#015	A	853	1
#016	B	853	1
#017	B	853	1
#018	A	853	1
#019	C	852	1
#020	C	852	1
#021	B	620	4
#022	A,C	620	8