EVERBOX



EVERBOX – 2X4

Preparations:

1	The surface on which the warehouse will be built should be straight and stable.
2	2 people are needed to assemble the warehouse.
3	Remove the nylon coating from the parts, before construction.
4	Plan the location of the door in advance.
5	Prepare the slope direction of the warehouse roof.
6	Go through the equipment list and make sure all the parts are there.

Tool list:

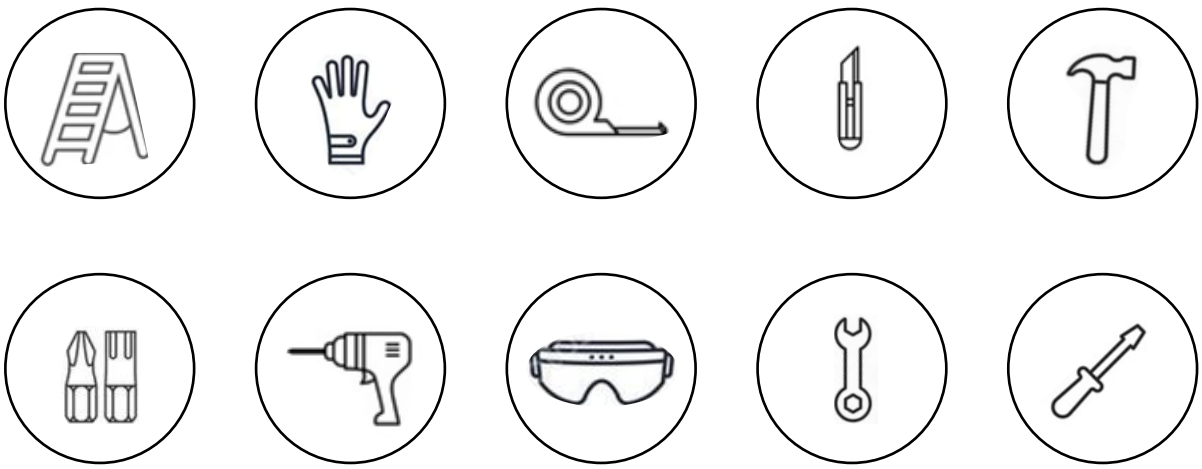

			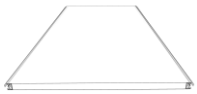	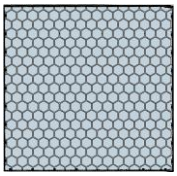	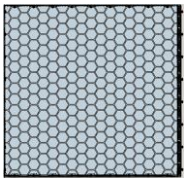
P-DOOR / X1	P-WALL / X11	P-R-20-S / X2	P-R-20-M / X2	T-0-4 / X1	T-1-3 / X4
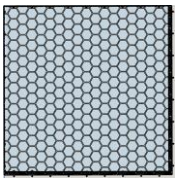					
T-2-2 / X3					
A-SET-SIDE-20					
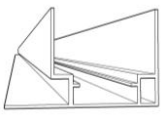			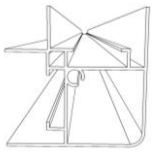	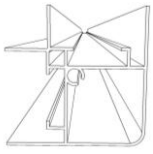	
AF-1906 / X2	AH-2134 / X2	AH-927 / X4	AL-2095 / X2	AL-2249 / X2	AD-1974R / X1
	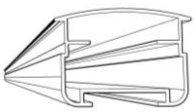		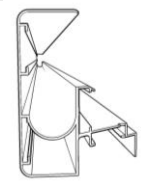		
AD-1974L / X1	AD-917F / X1	AD-960T / X1	AR-2030 / X2	AD-RAMP / X1	
A-SET-FACE-40					
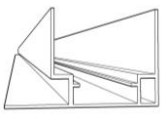					
AF-3863 / X2	AH-2058 / X3	AH-2212 / X3	AH-927 / X8	AR-3982 / X2	
G-SET-40/20					
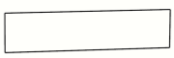					
G-97/23 / X4	G-97/7 / X4	G-15-23 / X2	G-7/15 / X2		

H-SET-40/20					
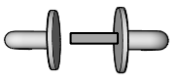		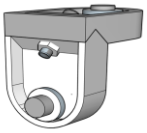		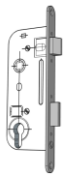	
C-HND / X1	C-90 / X40	C-DF / X2	C-RF / X4	C-LOOK / X1	S-D12X4 / X44
					
S-D20X4/ X6	S-35X3.5 / X10	S-D45X3.5 / X8	S-19X3 / X10	S-H30X6 / X2	S-H43X6 / X2
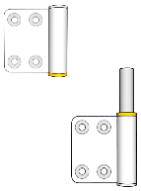					
C-HG-R / X2					

1

C1

AF-1906	X2	AF-3863	X2	C-90	x16

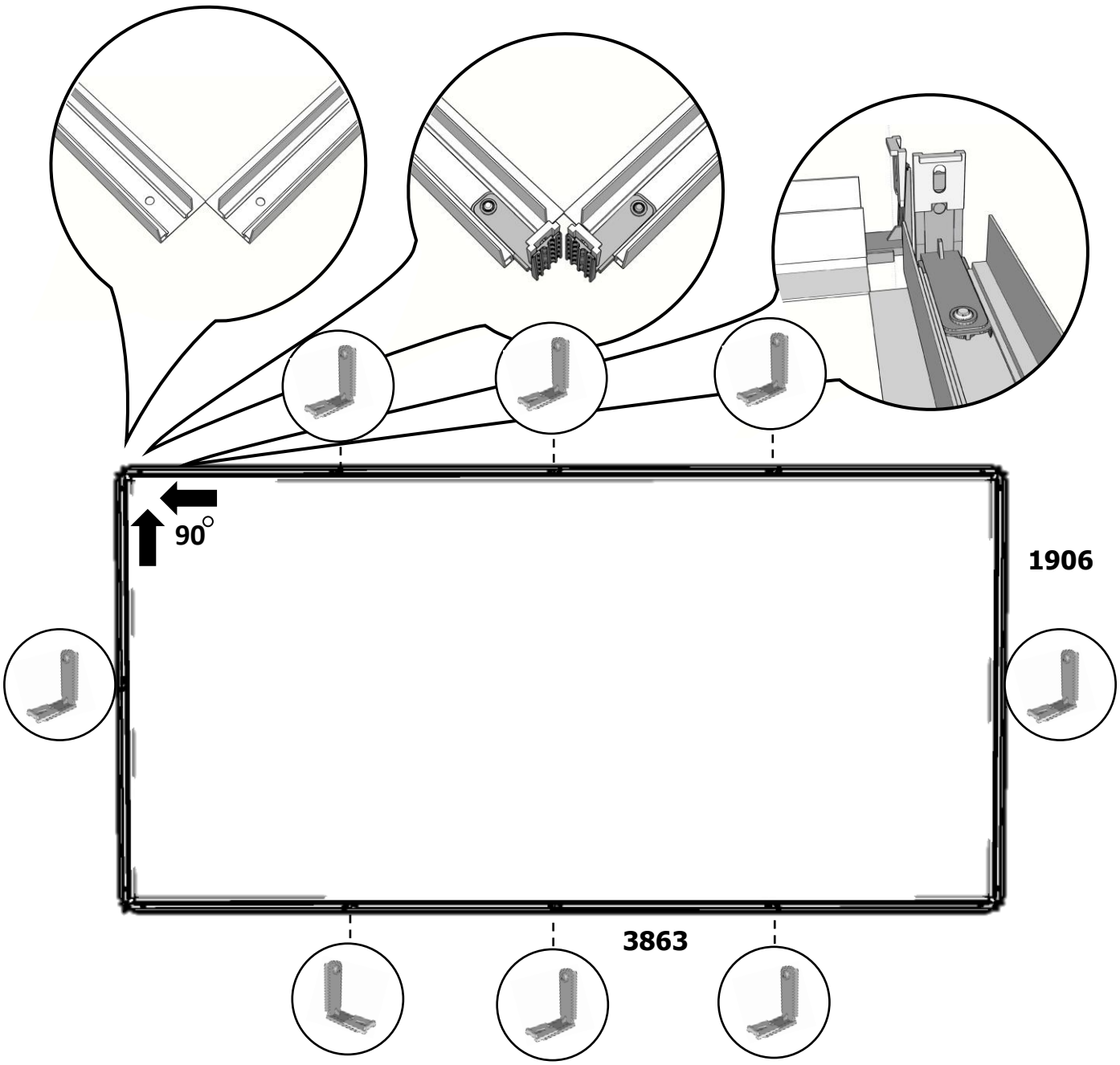

2

C2

C-90-1	X24	C-90	X24	AH-927	X12

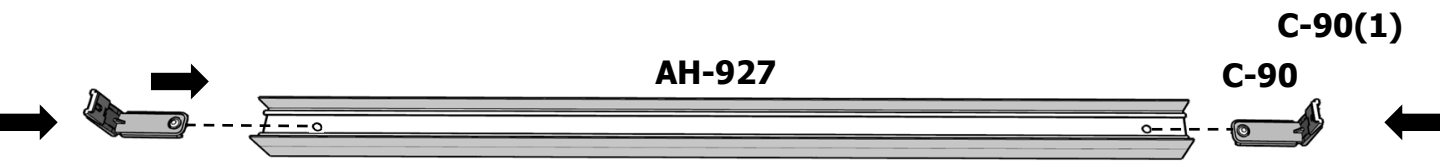

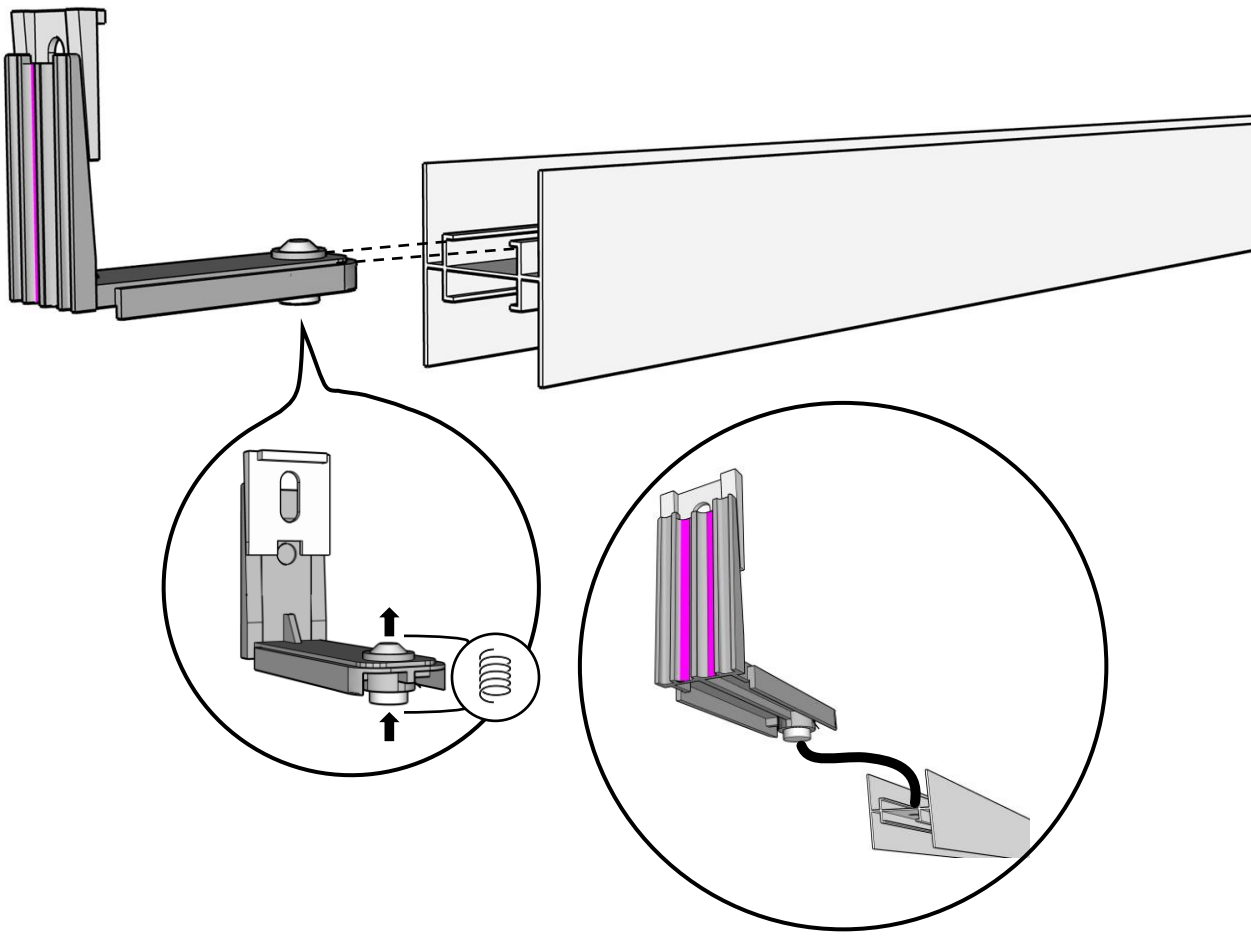

X12 **AH-927**

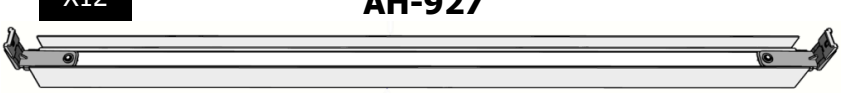

3

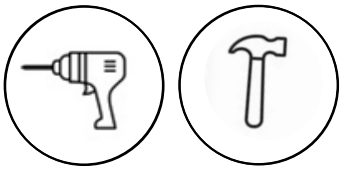

C3

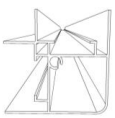	AL-2249	X2	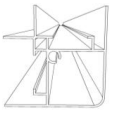	AL-2095	X2	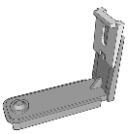	C-90	X8		D12X4B	X8

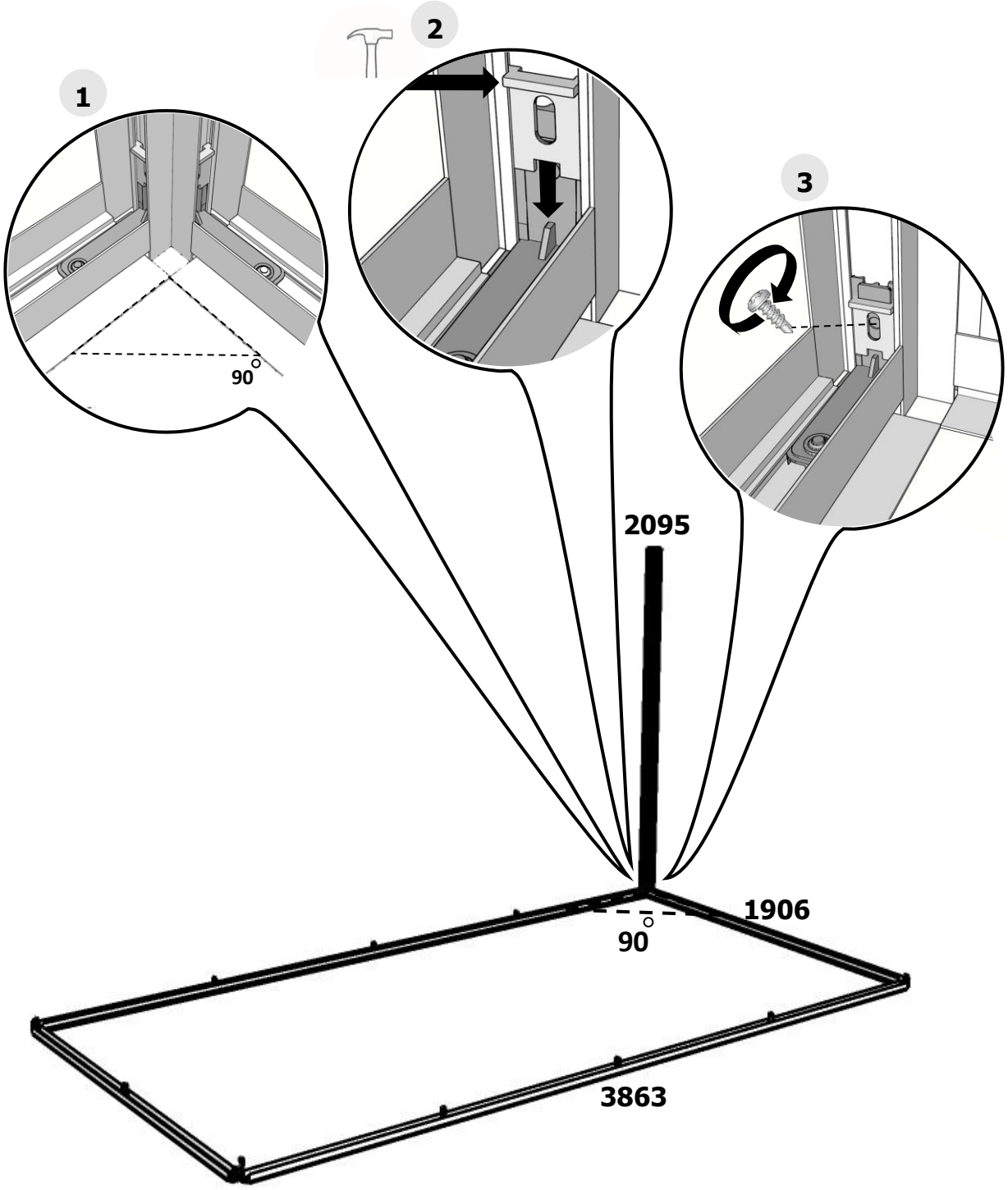

4

C4

AH-2058-	X3	AH-2212	X3	AH-2135	X2

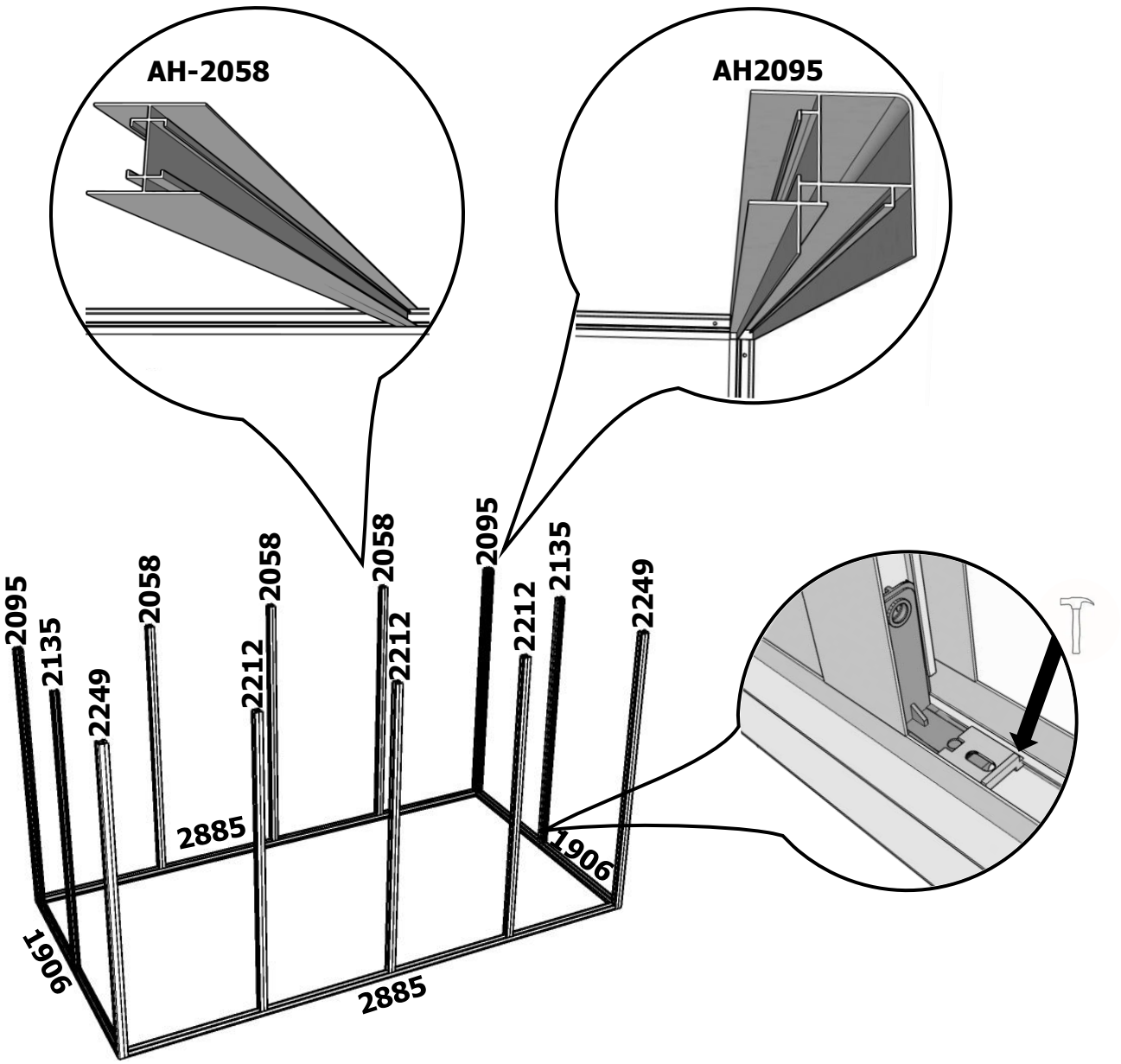

5

C5

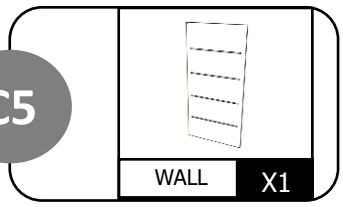

1

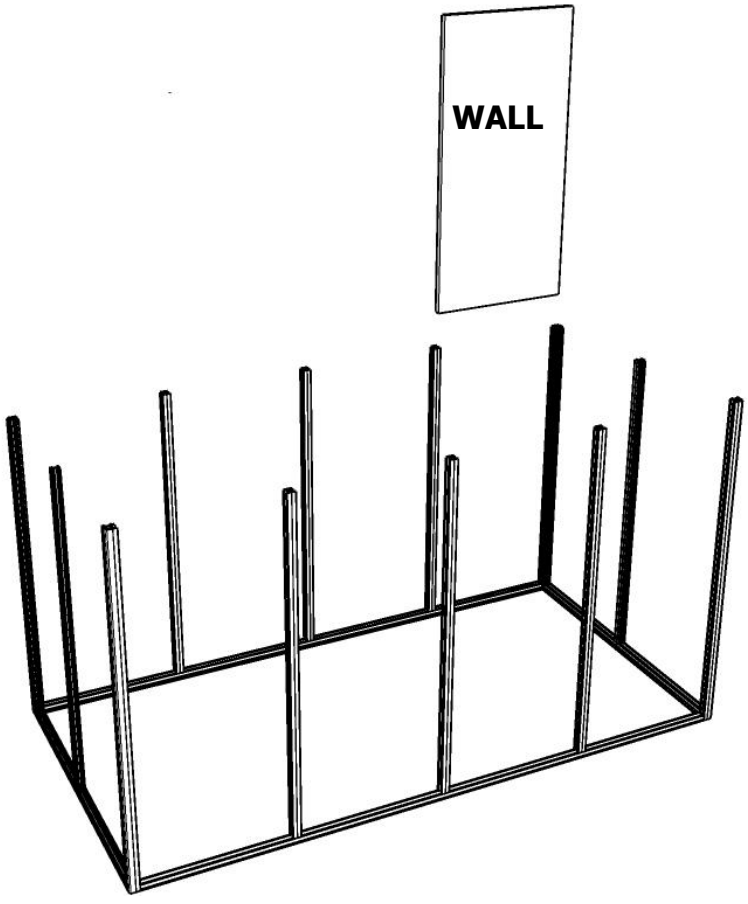

AH-2058

AL-2095

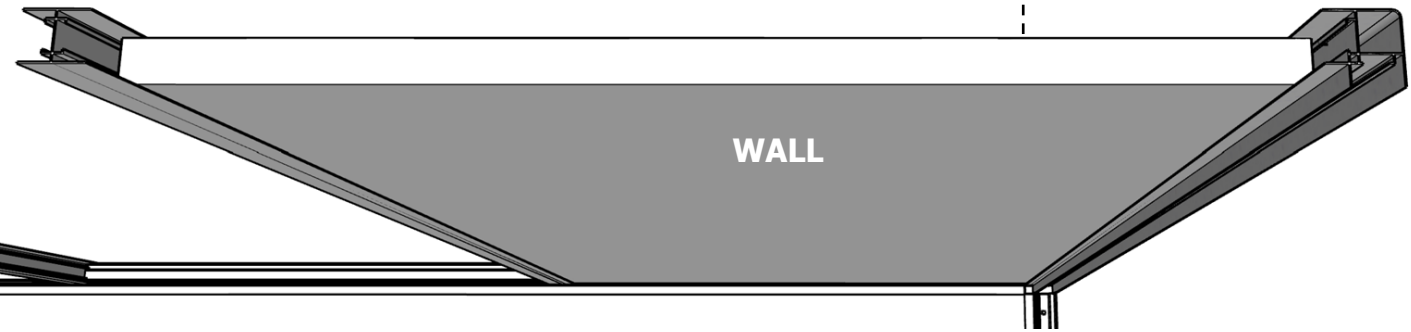

6

C6

WALL X11

AH-927 X12

2058

2095

2

2095

1

WALL

AH-2058

AH-927

AL-2095

7



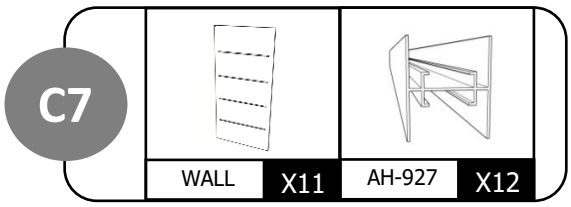



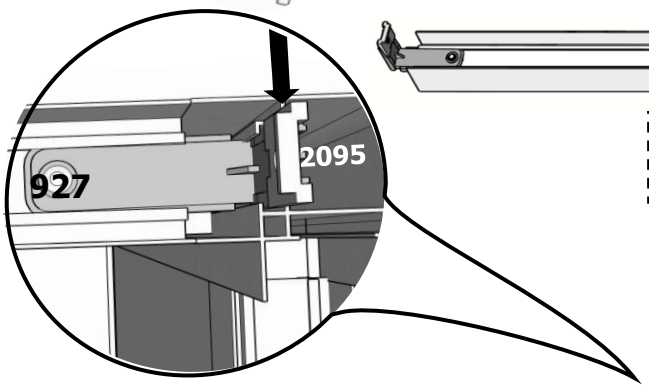

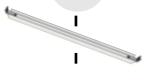

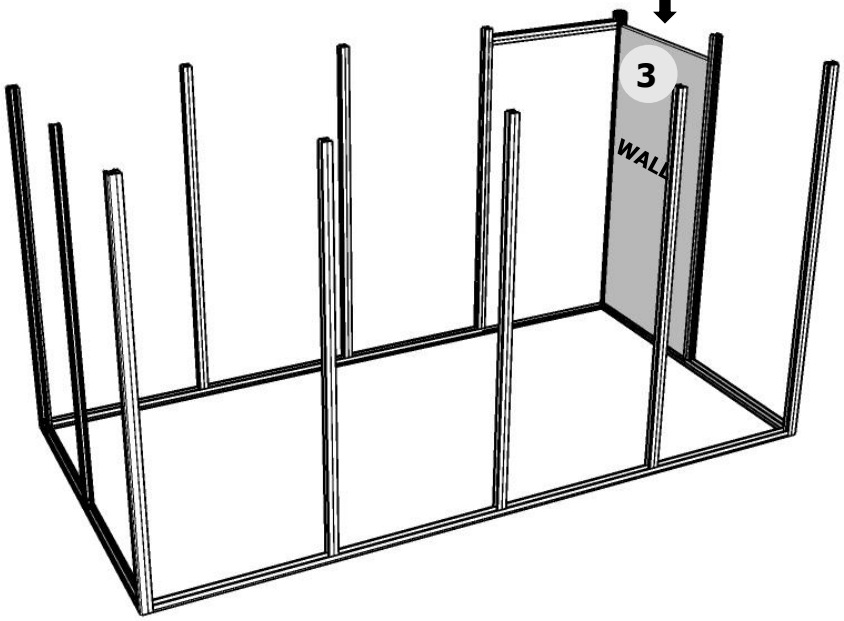

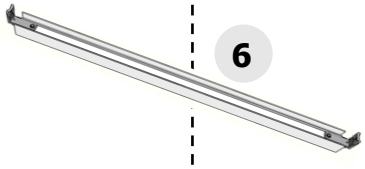

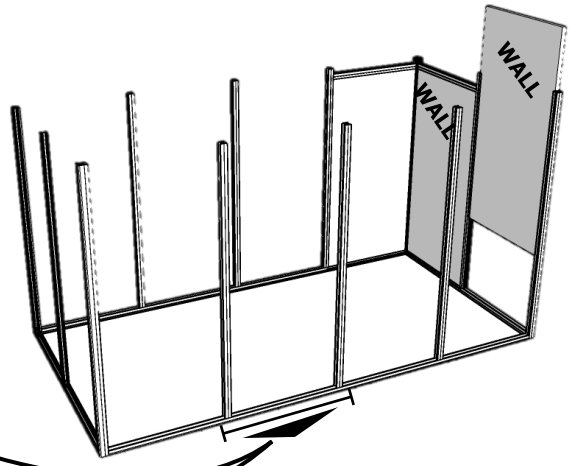



8

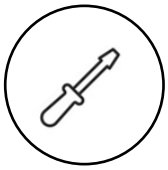

C8

DF	X2	AD-1974-R	X1	AD-1974-L	X1	AD-960-T	X1

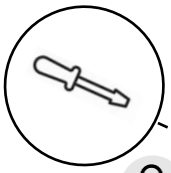

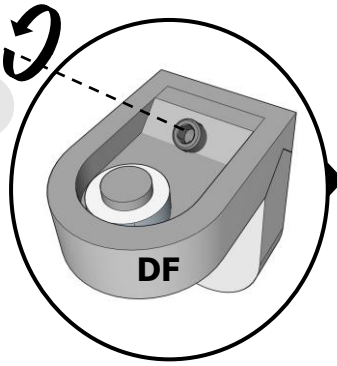

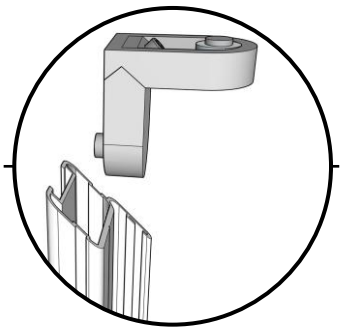

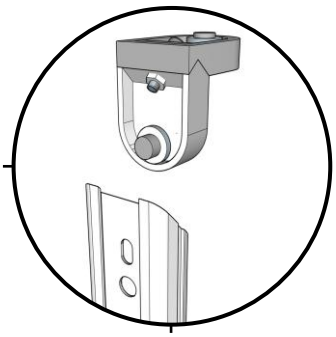

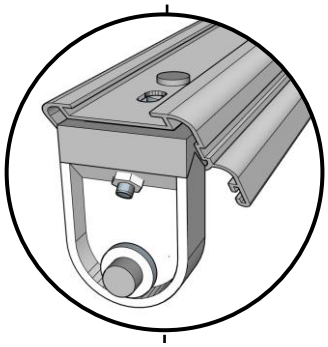

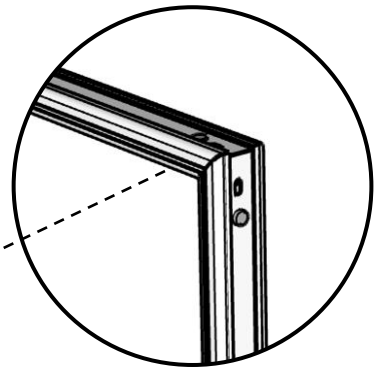

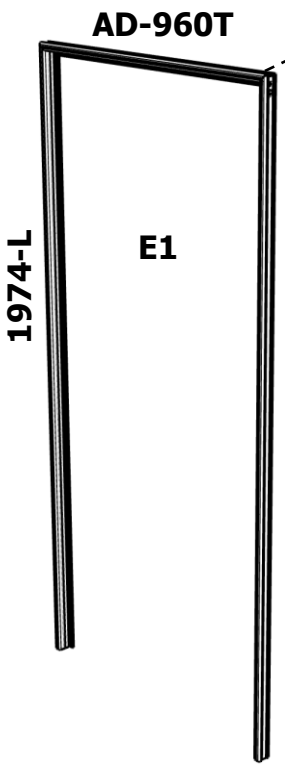

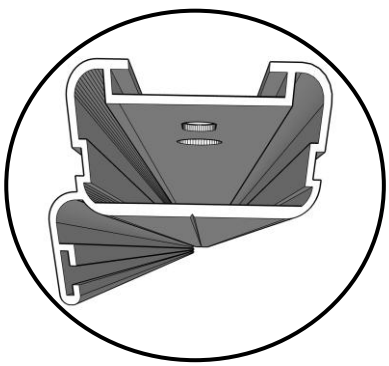

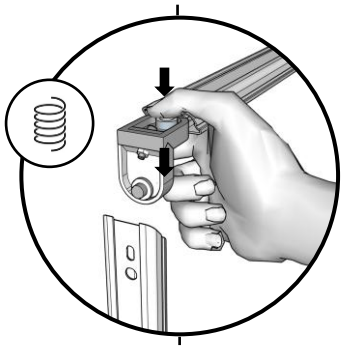

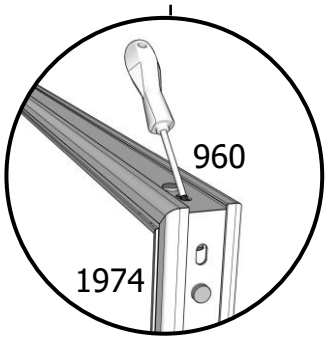

9

C9

E1 X1

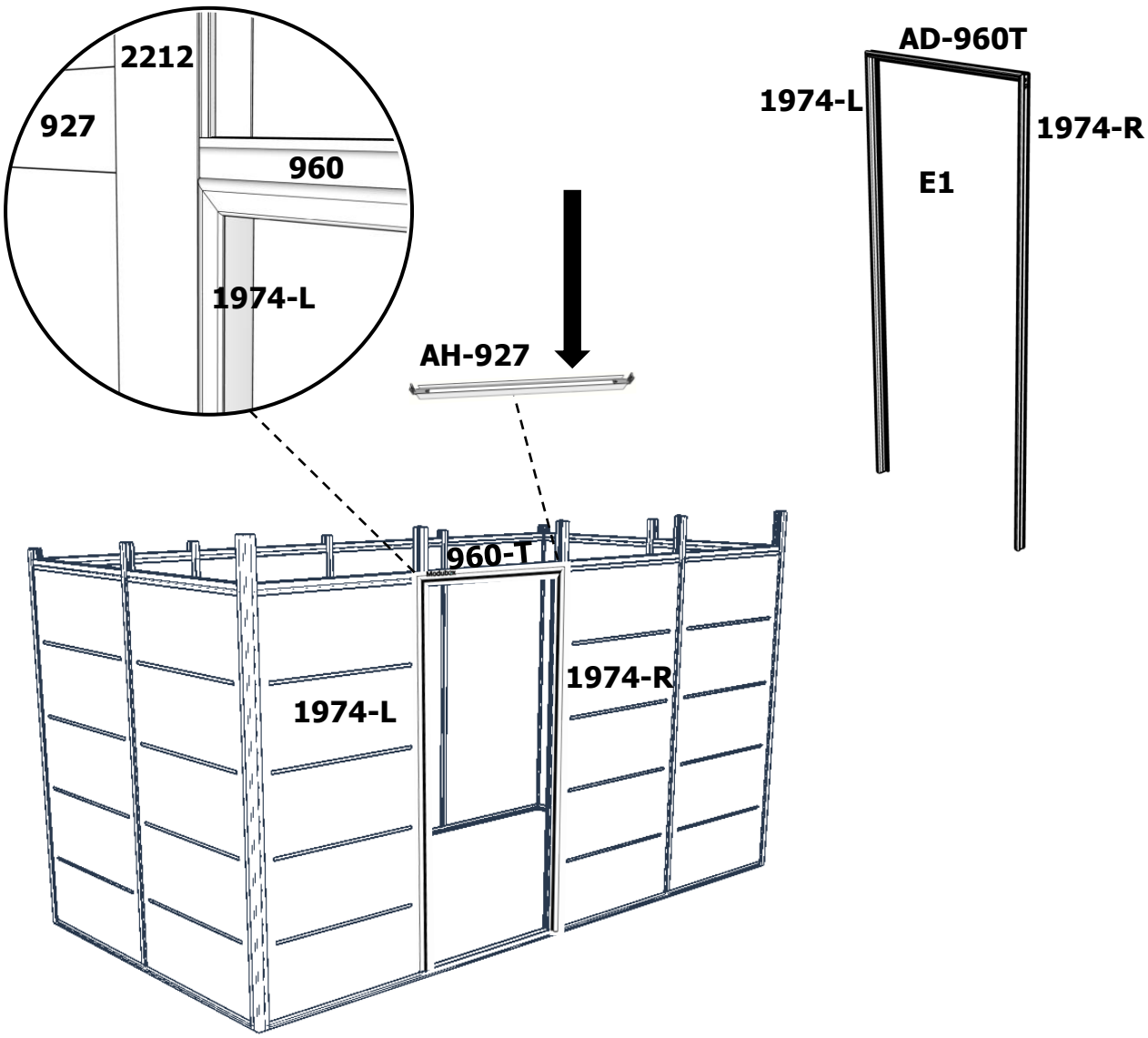
2212
927
960
1974-L
AH-927
960-T
1974-L
1974-R
AD-960T
1974-L
1974-R
E1

10

C10

		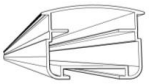	
RAMP	X1	AD-917-F	X1

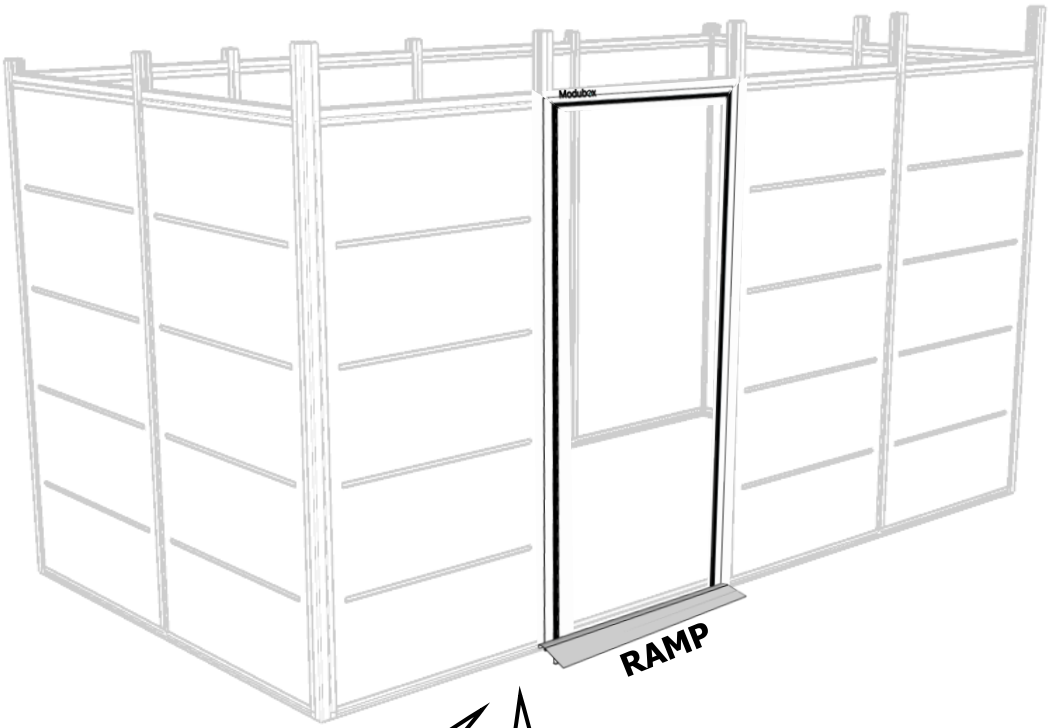

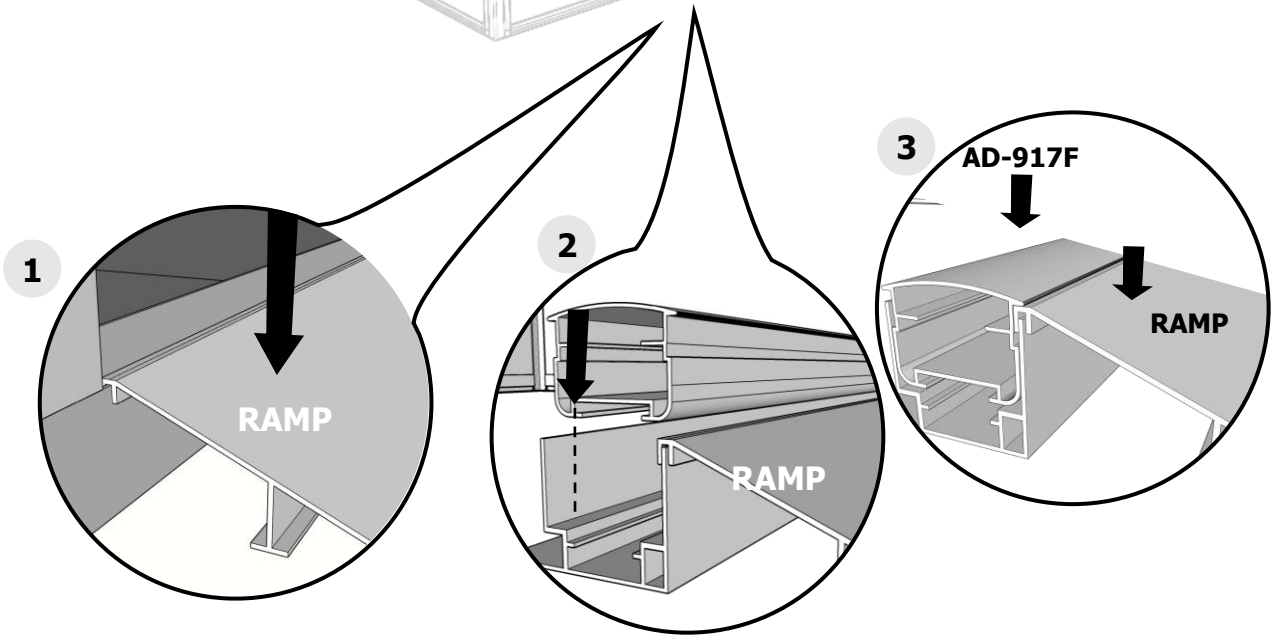

11



C11

HG-D	X2	HG-UP	X2	E1	X1	DOOR	X1	35X3.5	X8	D45X3.5	X8

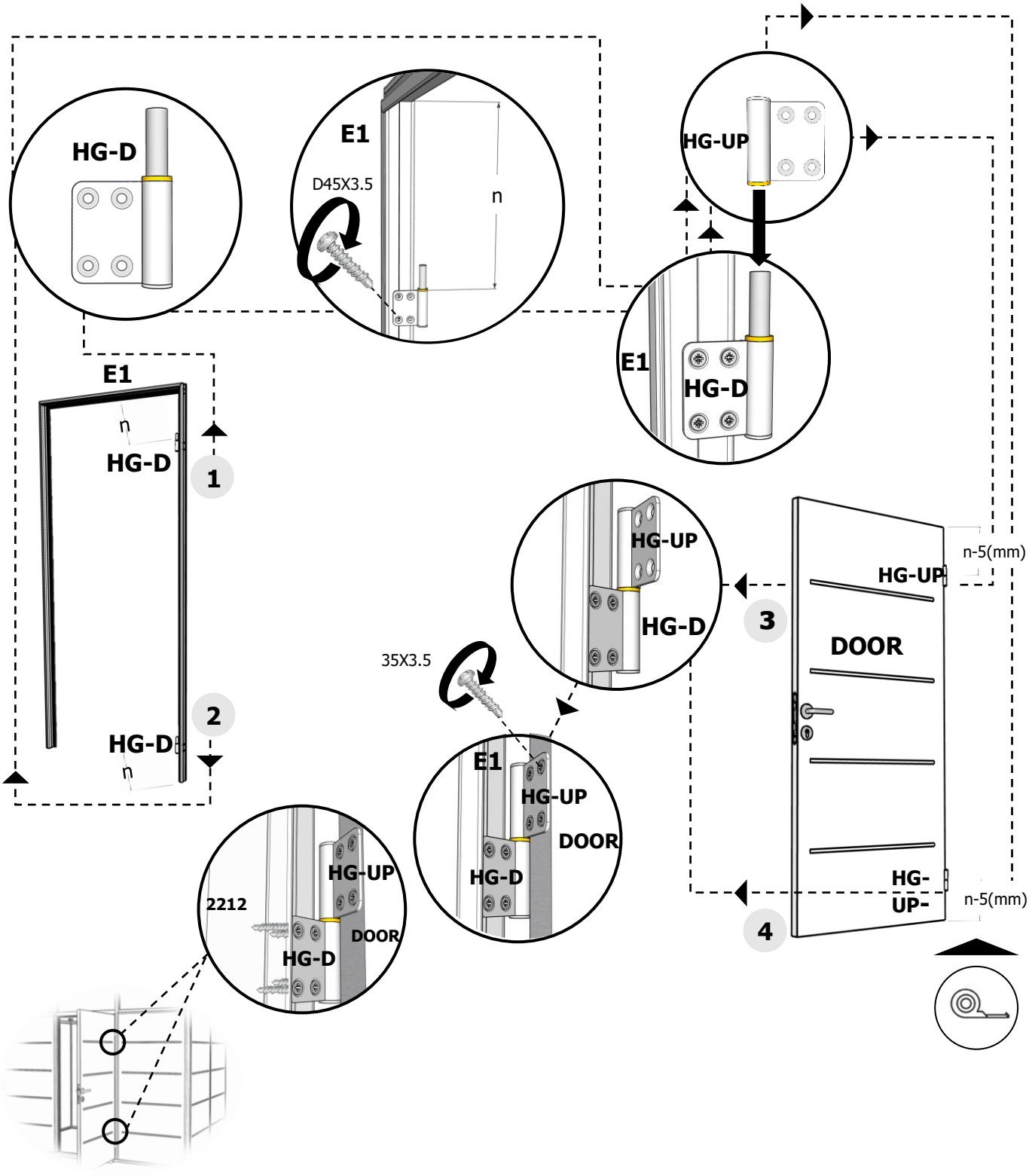

13



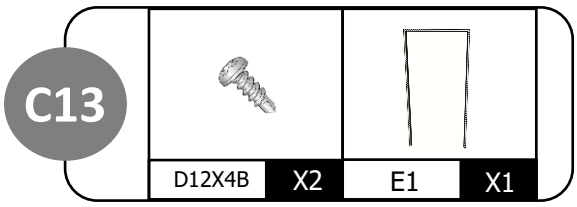
C13
D12X4B
X2
E1
X1

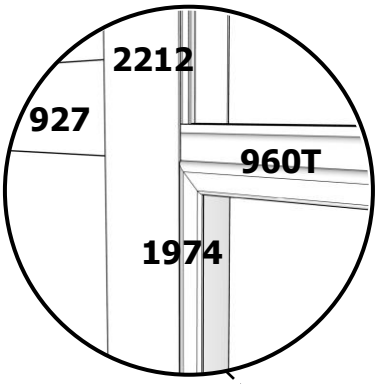
2212
927
960T
1974

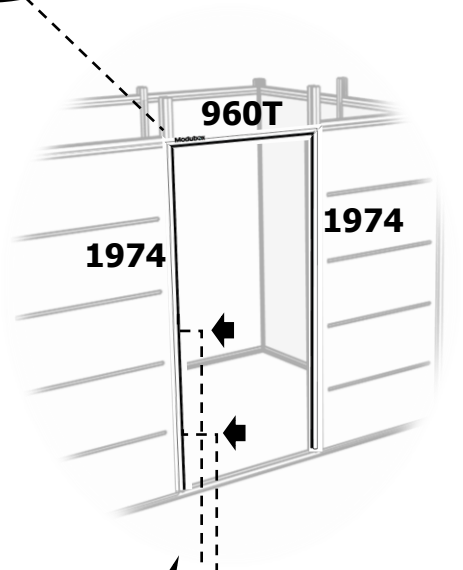
960T
1974
1974

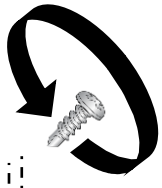

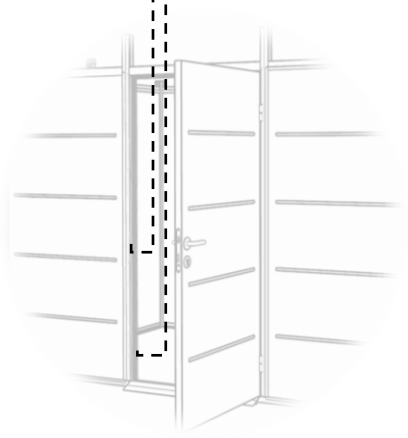

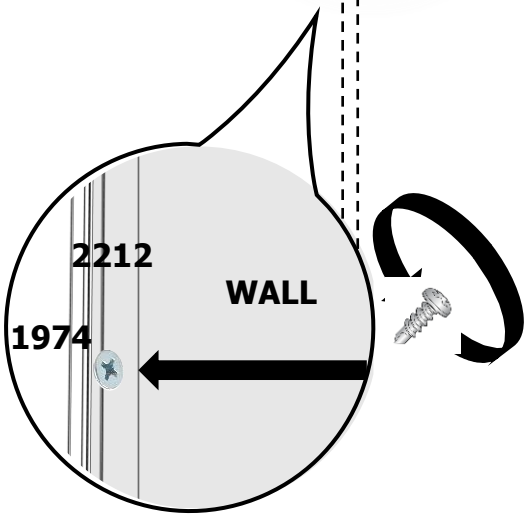
2212
WALL
1974

12

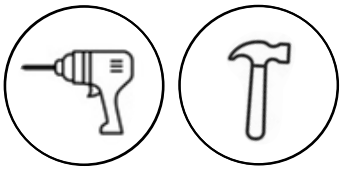

C12

19X3	X10	35X3.5	X2	N4	X2	N1	X1	N2	X1	N3	X1

N5	X1

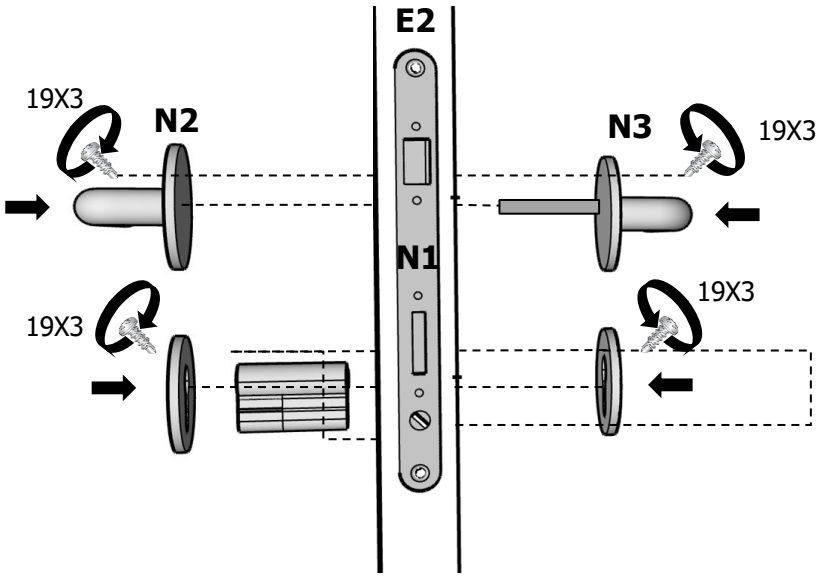

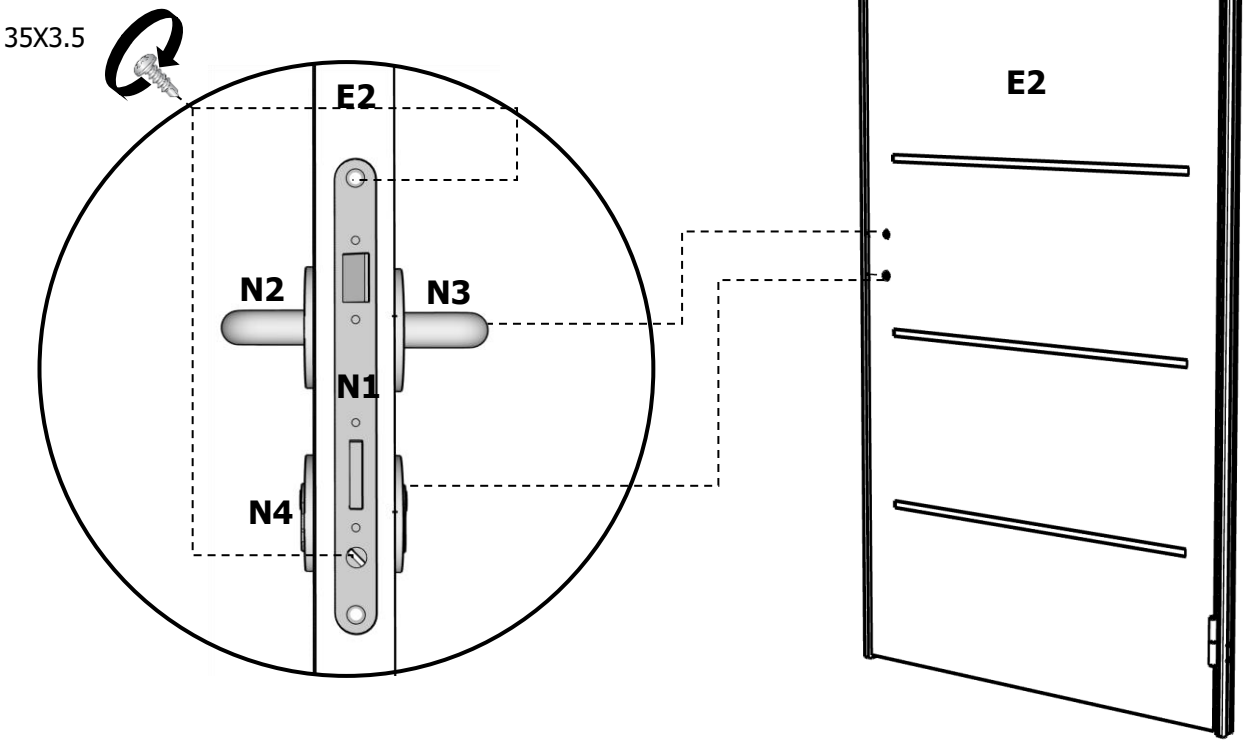

14

C14

G-7/15	X2	G-15-23	X2	G-97/7	X4	G-97/23	X4

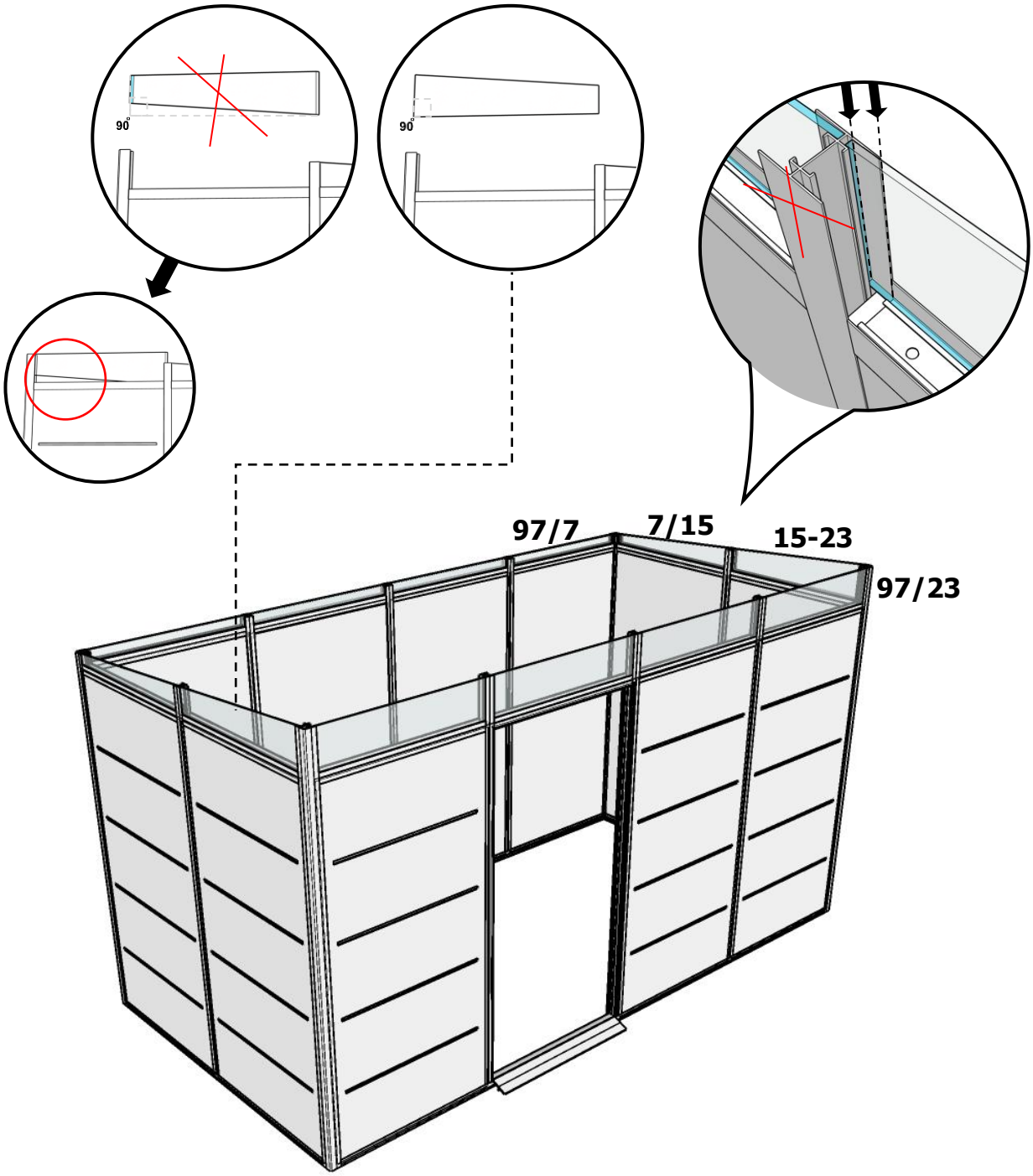

15

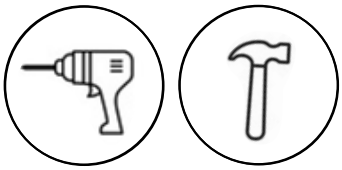

C15

D12X4B	X8	IS	X2	C-RF	X2	AR-3982	X2	AR-2030	X1

1

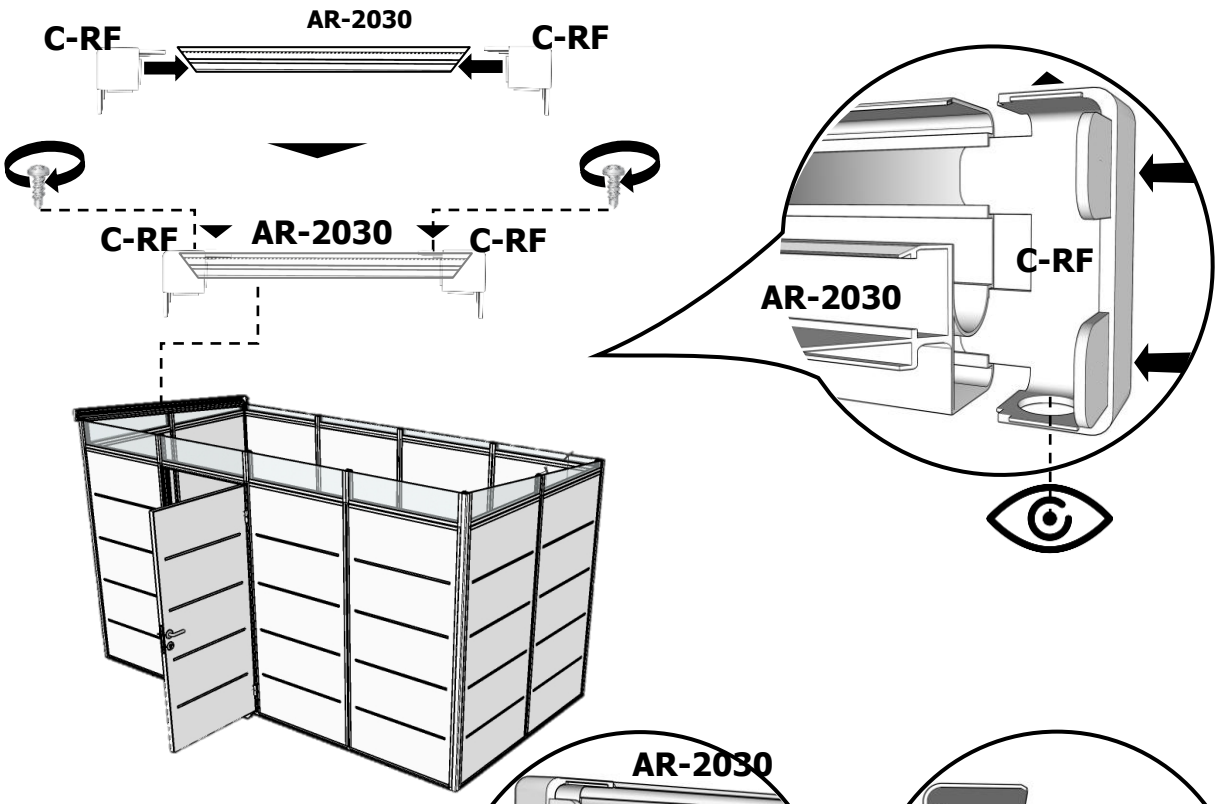

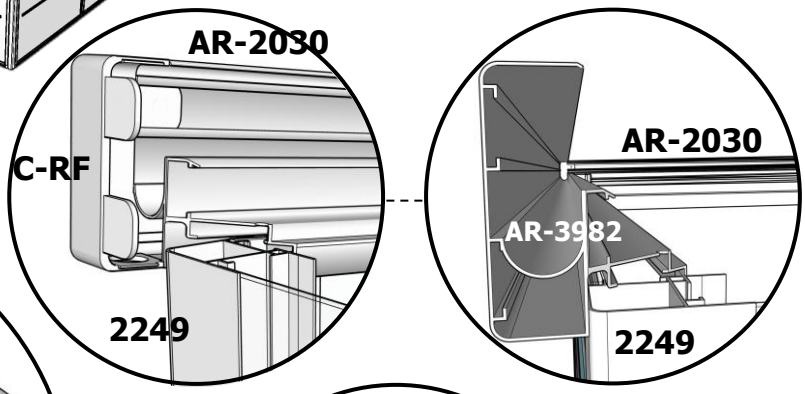

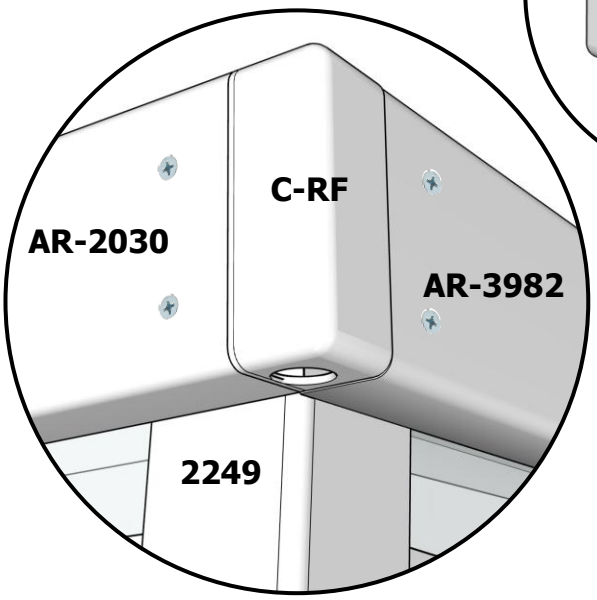

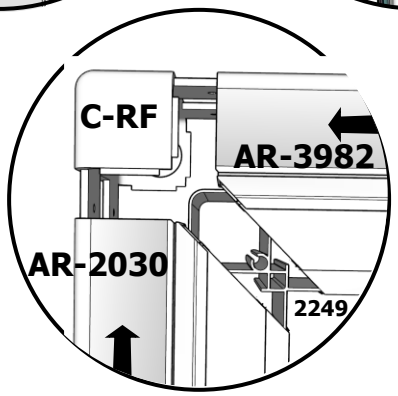

16



C16

AR-3982	X2	AR-2030	X1	IS	X2

2

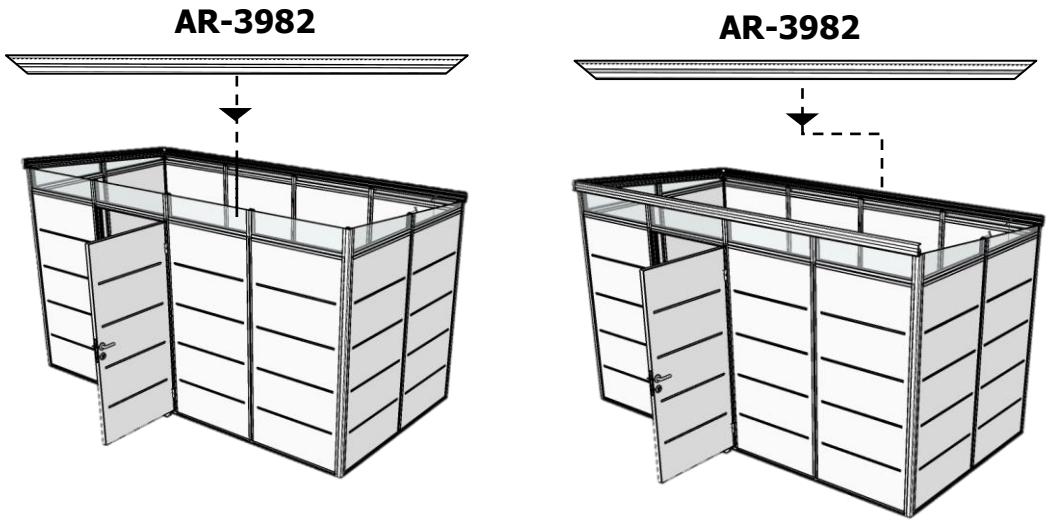

3

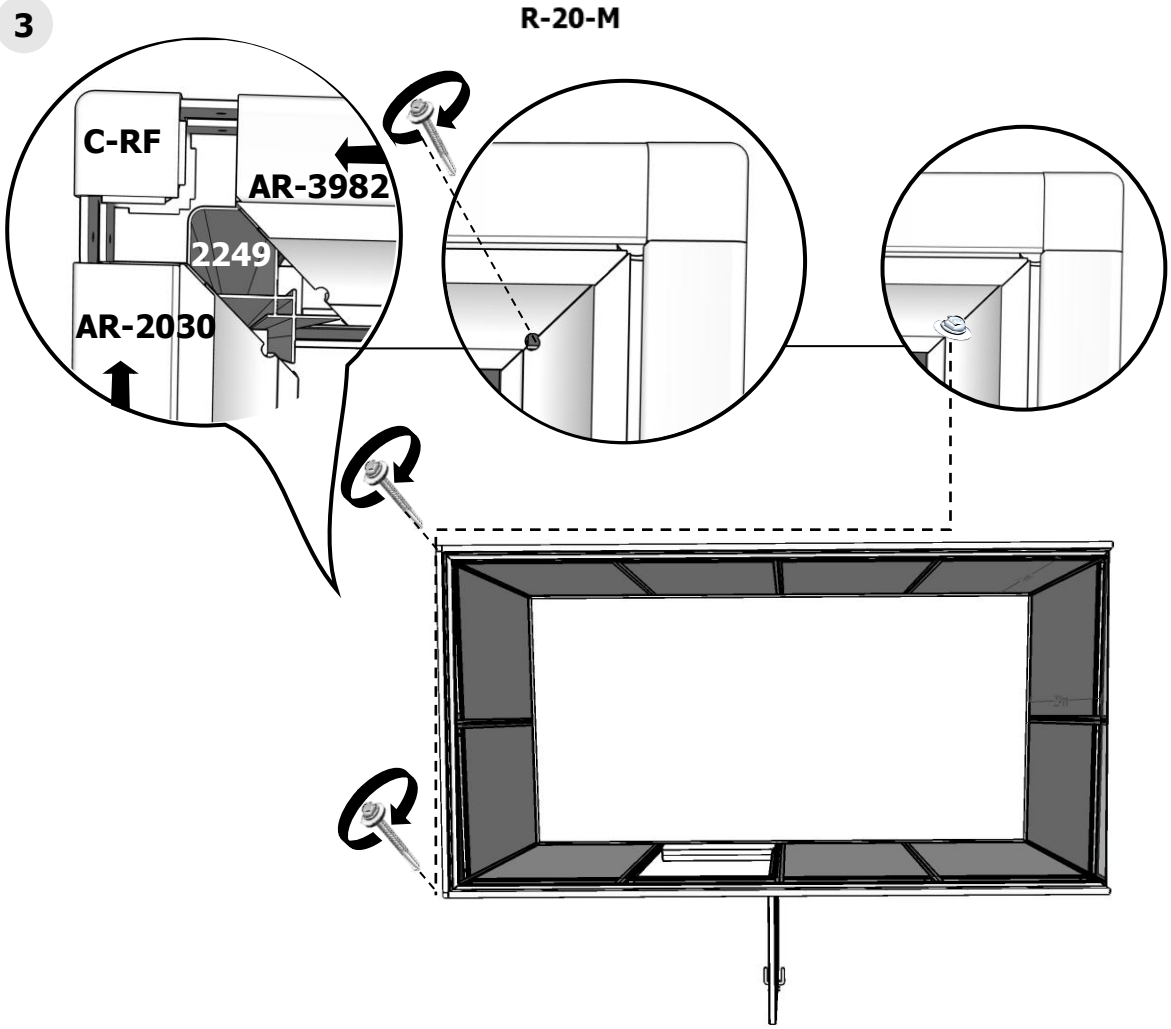

17

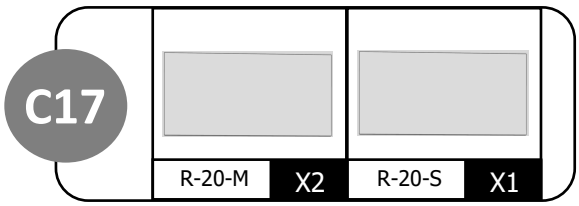
C17
R-20-M
X2
R-20-S
X1

4

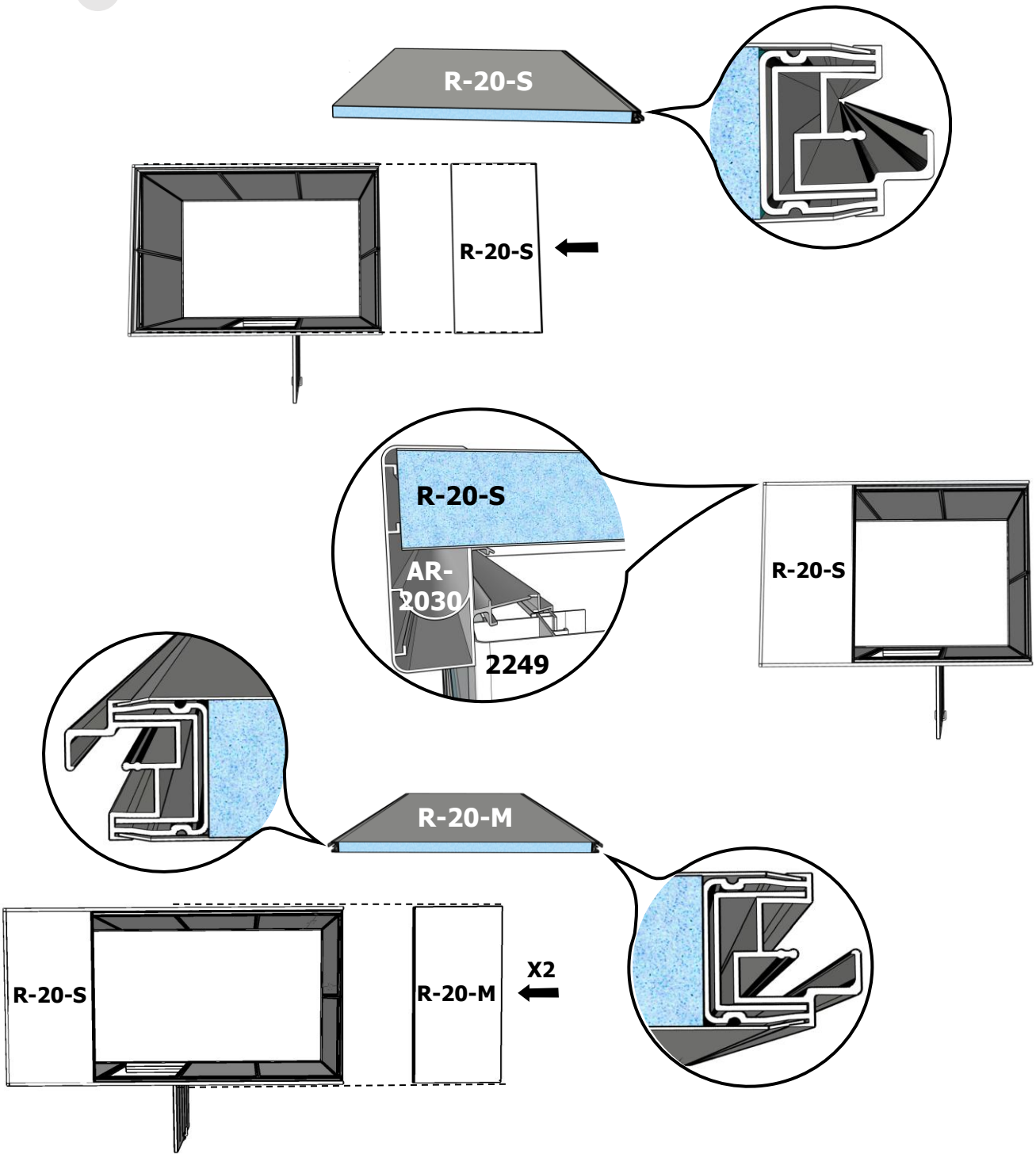
R-20-S
R-20-S
R-20-S
AR-2030
2249
R-20-S
R-20-M
R-20-S
R-20-M
X2

18

C18

D20X4B	X4	D12X4B	X4	C-RF	X2	AR-2030	X1	R-20-M	X2	R-20-S	X2

5

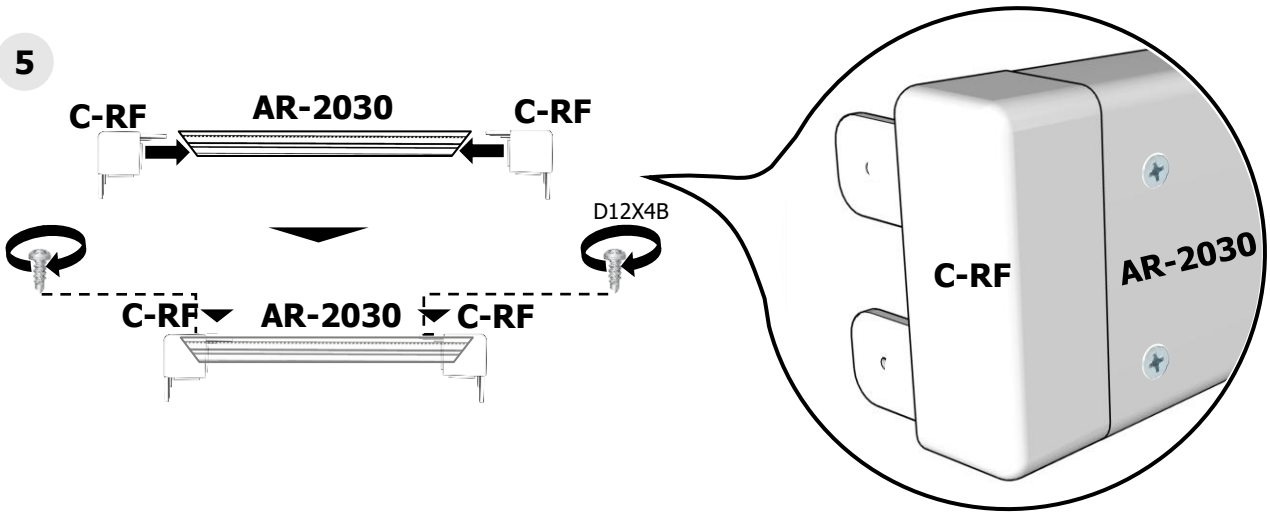

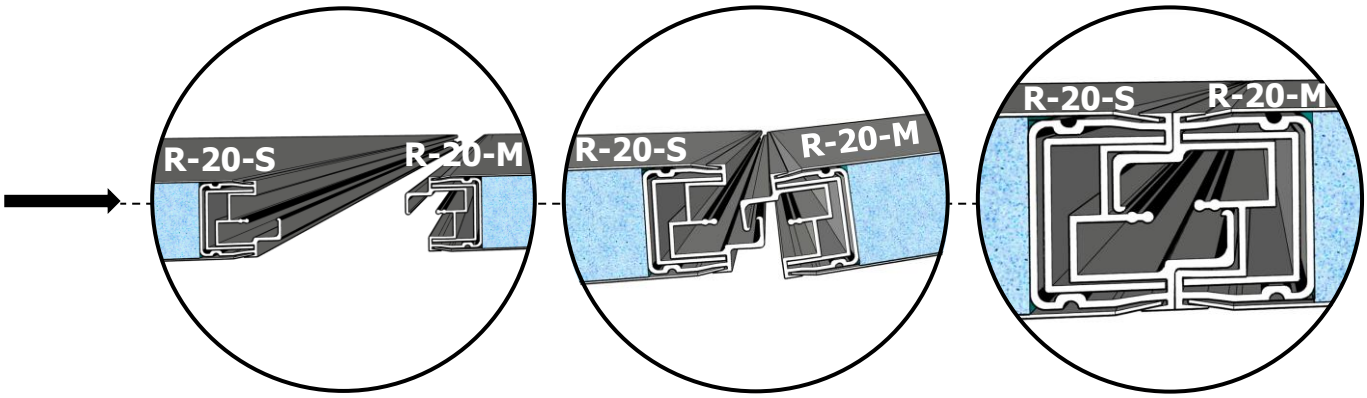

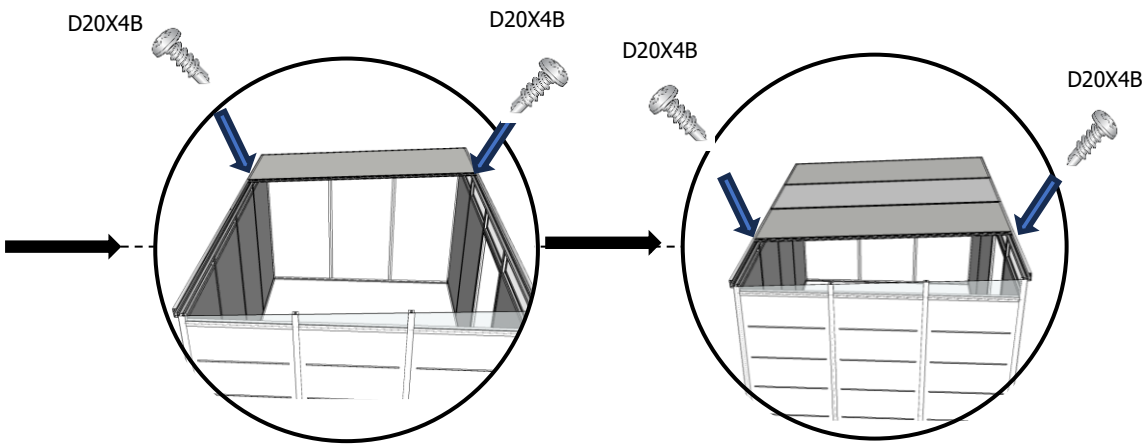

19

C19

D20X4B	X4	D12X4B	X4	C-RF	X2	AR-2030	X1	R-20-M	X3	R-20-S	X2

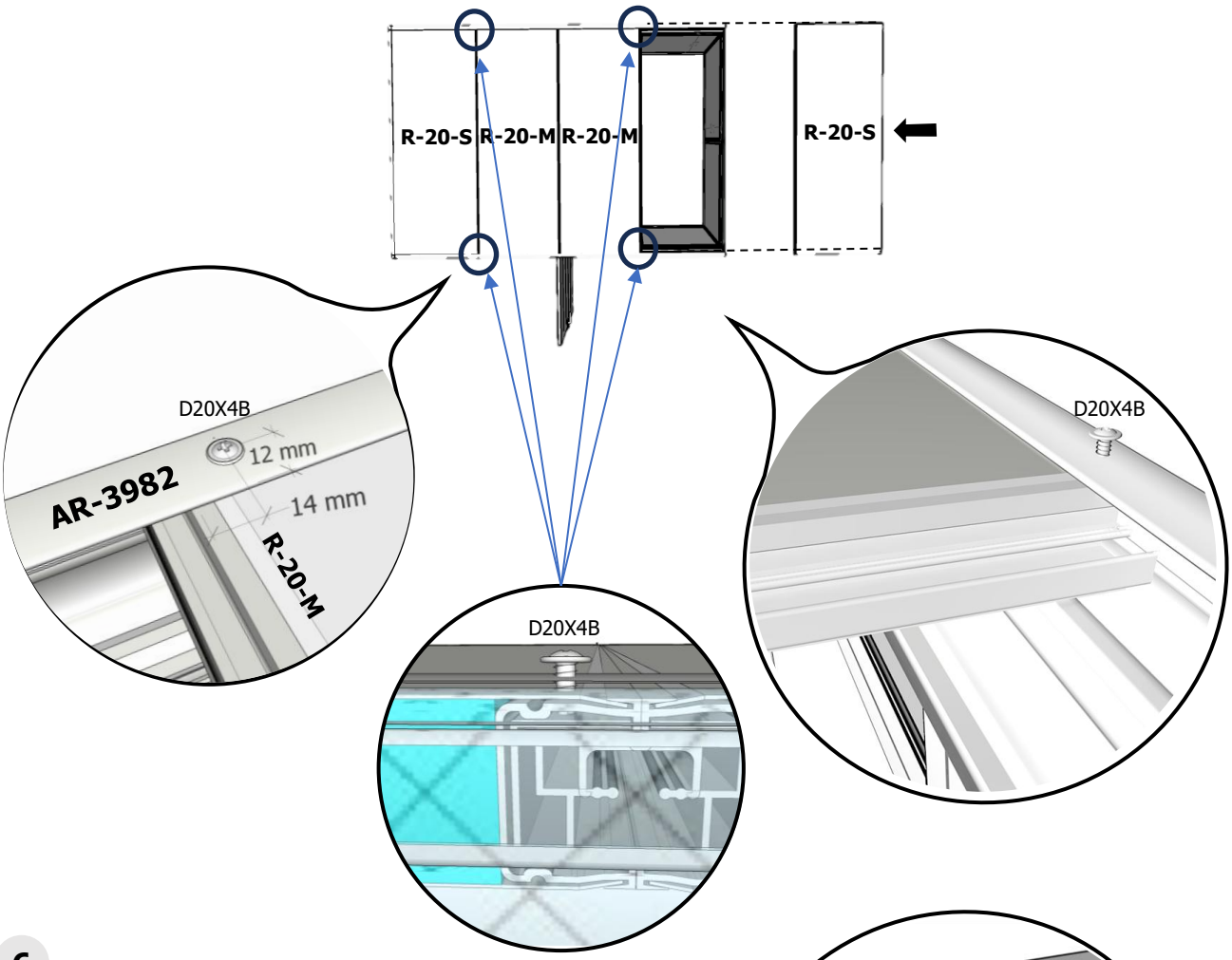

6

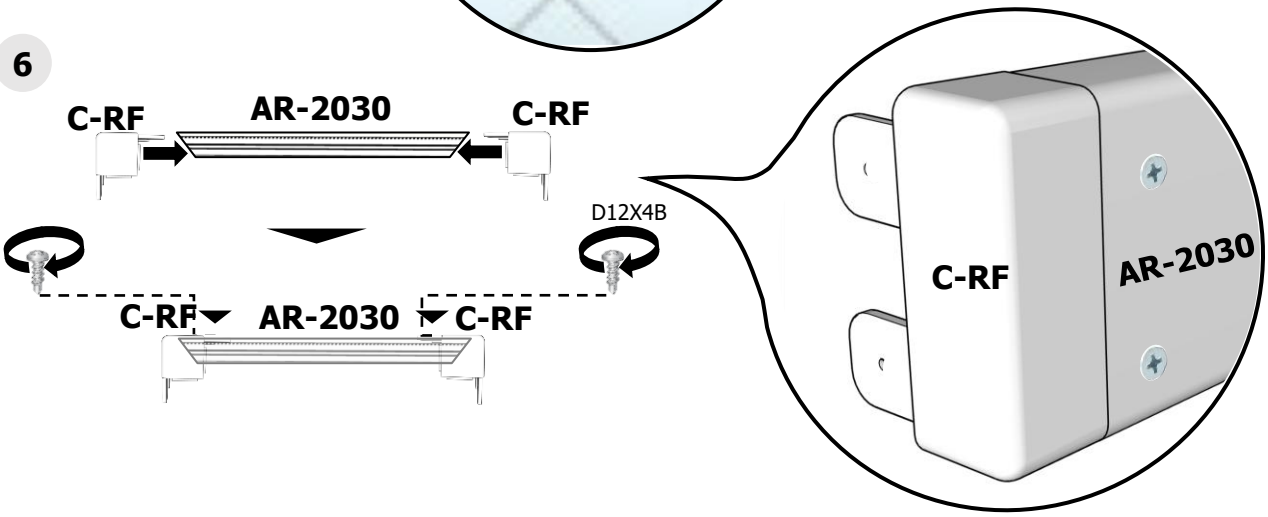

20

C20

S-H43X6	X2	D12X4B	X4	C-RF	X2	AR-2030	X1

7

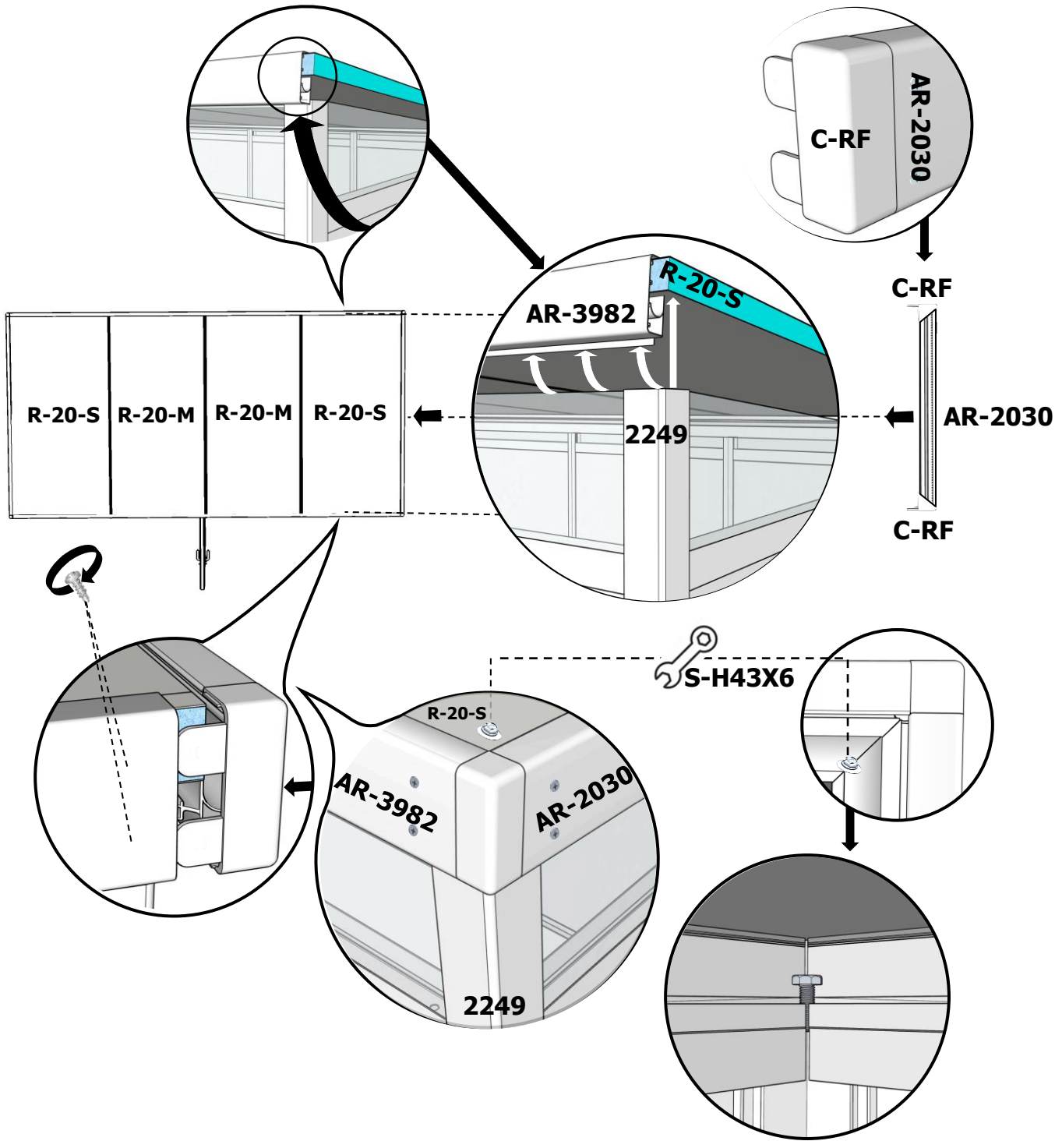

21

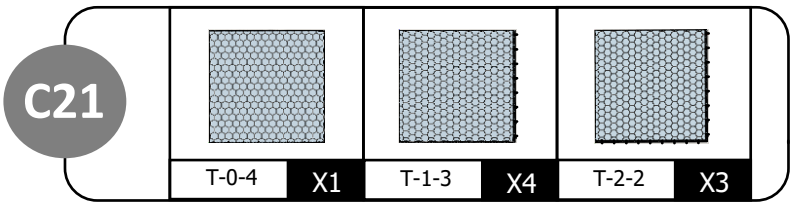
C21
T-0-4
X1
T-1-3
X4
T-2-2
X3

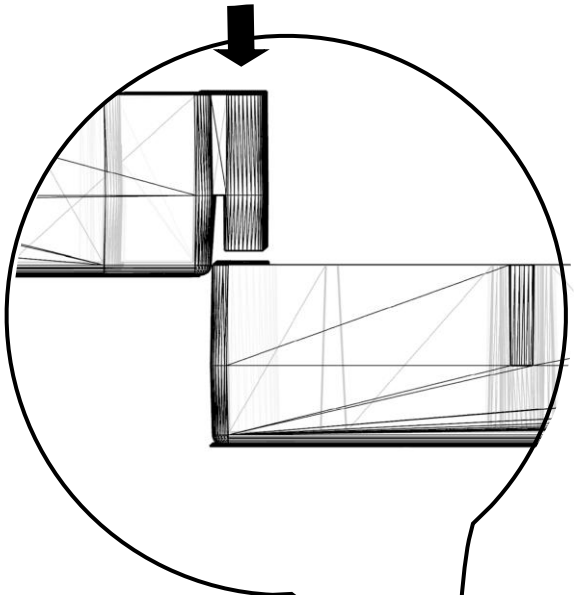

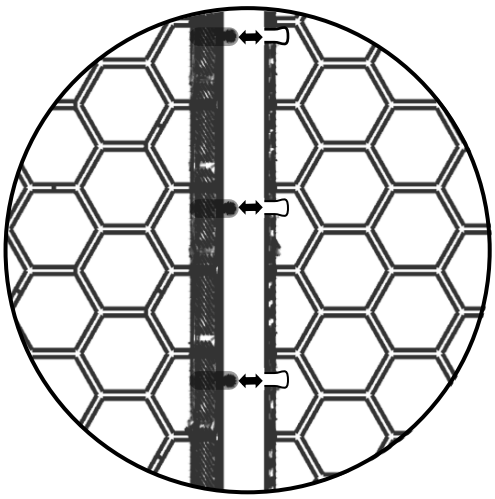

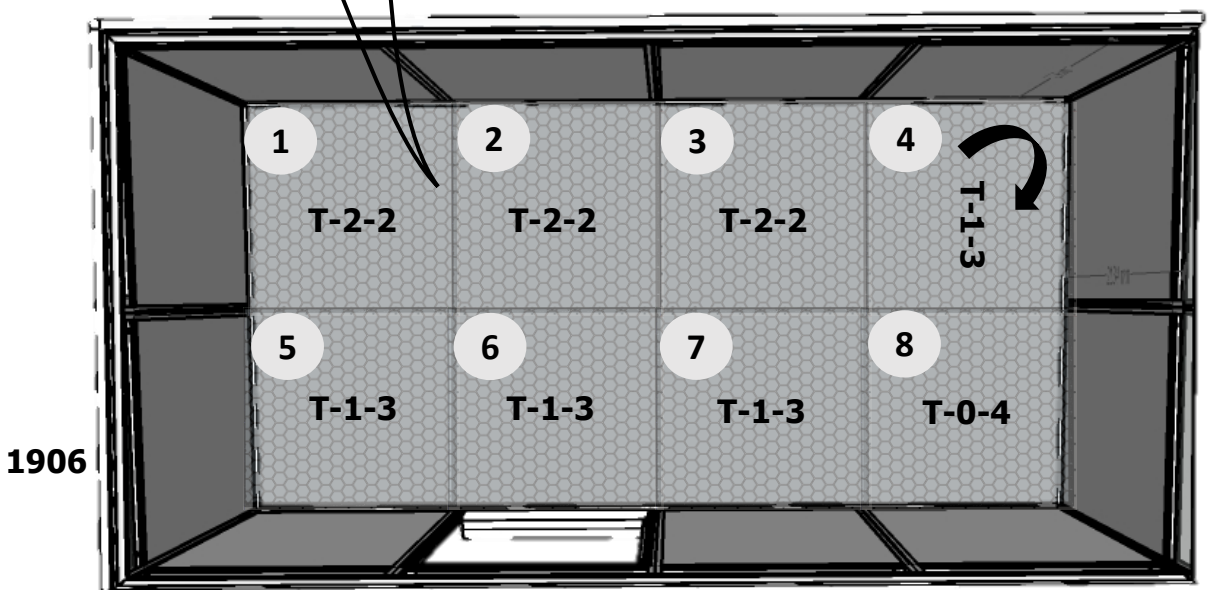
1
T-2-2
2
T-2-2
3
T-2-2
4
T-1-3
5
T-1-3
6
T-1-3
7
T-1-3
8
T-0-4
1906
3863

EVERBOX

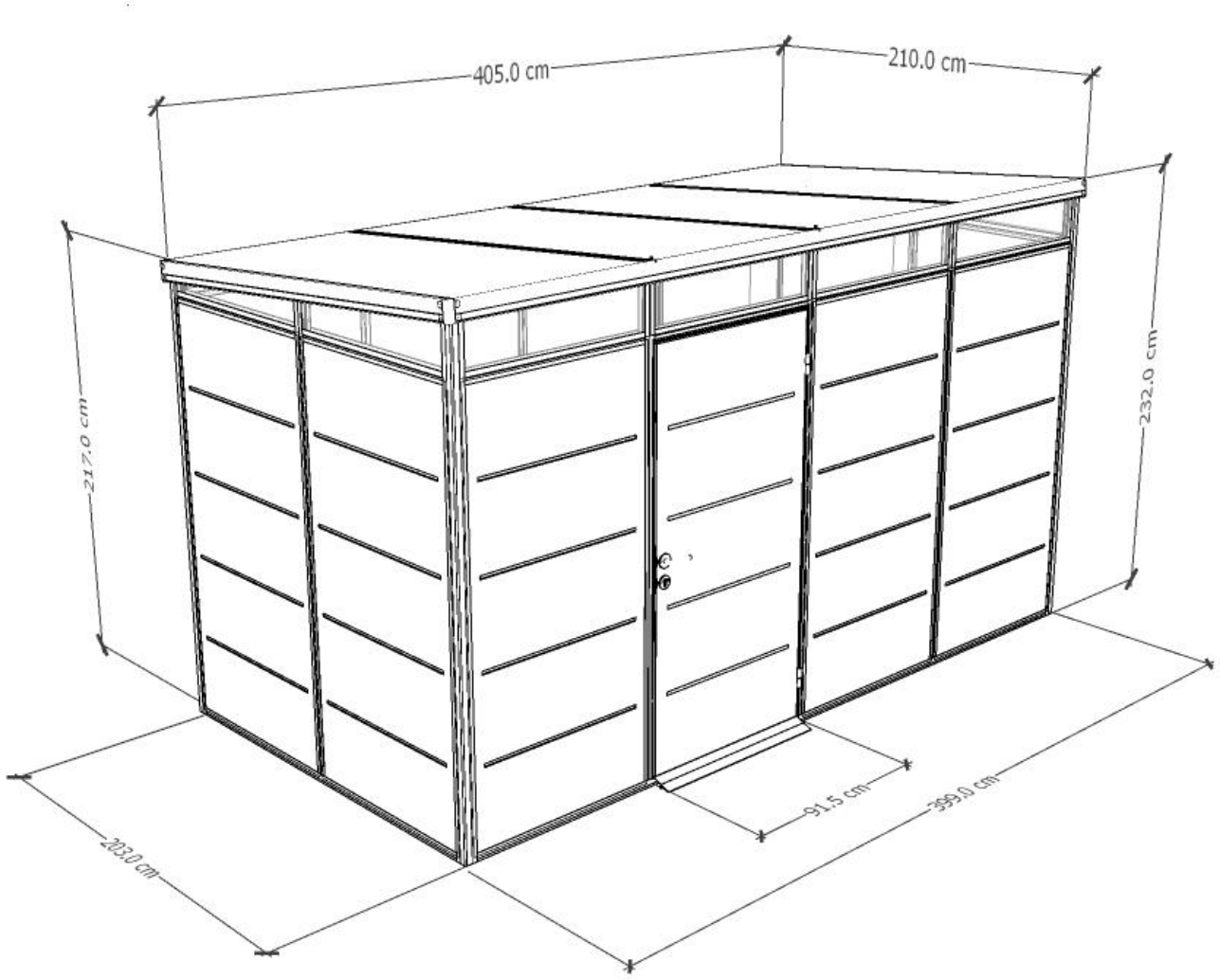

EVERBOX – 2X4