EVERBOX



EVERBOX – 5X3

Preparations:

1	The surface on which the warehouse will be built should be straight and stable.
2	2 people are needed to assemble the warehouse.
3	Remove the nylon coating from the parts, before construction.
4	Plan the location of the door in advance.
5	Prepare the slope direction of the warehouse roof.
6	Go through the equipment list and make sure all the parts are there.

Tool list:

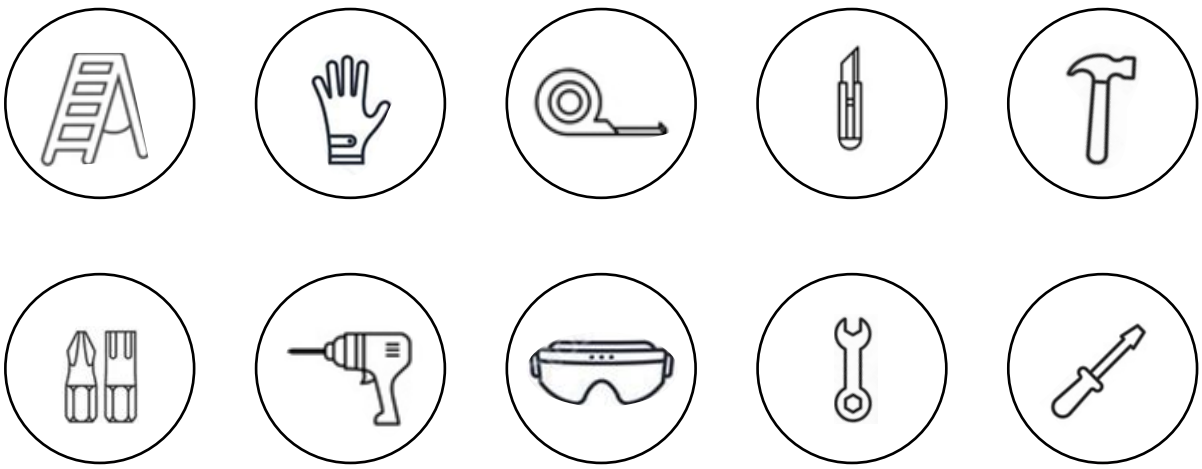

				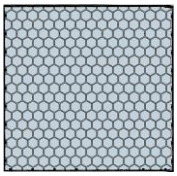	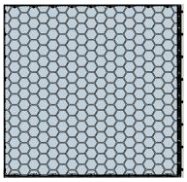
P-DOOR / X1	P-WALL / X15	P-R-30-S / X2	P-R-30-M / X3	T-0-4 / X1	T-1-3 / X6

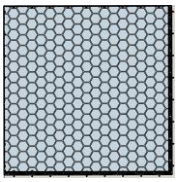					
T-2-2 / X8					
A-SET-SIDE-30					
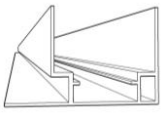				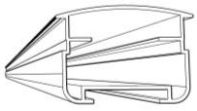	
AF-2885 / X2	AH-2109 / X2	AH-2160 / X2	AH-927 / X6	AD-917F / X1	AR-3008 / X2
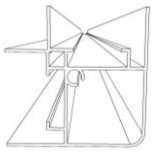	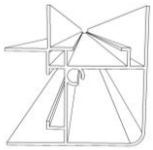				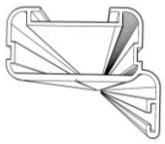
AL-2095 / X2	AL-2249 / X2	AD-RAMP / X1	AD-1974L / X1	AD-1974R / X1	AD-960T / X1
A-SET-FACE-50					
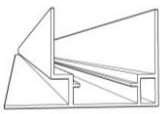					
AF-4841 / X2	AH-2058 / X4	AH-2212 / X4	AH-927 / X10	AR-4960 / X2	
G-SET-30/50					
					
G-97/23 / X5	G-97/7 / X5	G-17-23 / X2	G-12-17 / X2	G-7-12 / X2	

H-SET-30/50					
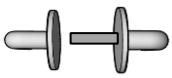		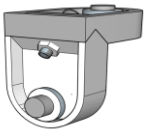		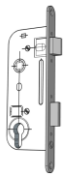	
C-HND / X1	C-90 / X52	C-DF / X2	C-RF / X4	C-LOOK / X1	S-D12X4 / X48

					
S-D20X4/ X8	S-35X3.5 / X10	S-D45X3.5 / X8	S-19X3 / X10	S-H30X6 / X2	S-H43X6 / X2

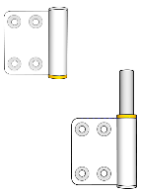					
C-HG-R / X1					

1

C1

AF-4841	X2	AF-2885	X2	C-90	x32

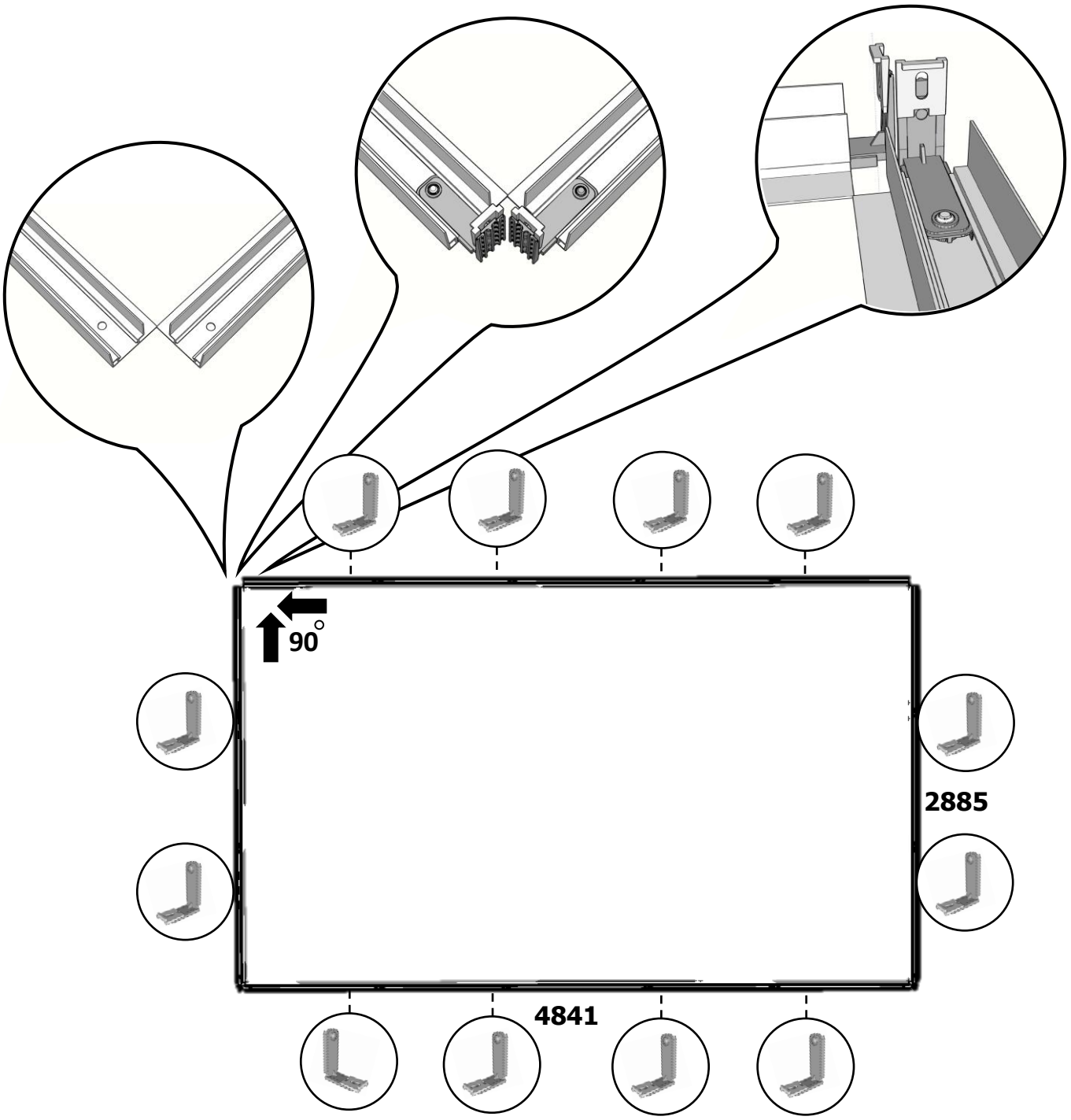

2

C2

	C-90)1(	X32		C-90	X32
	AH-927	X16			

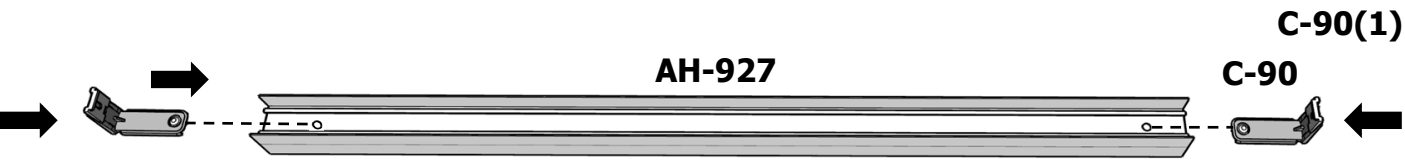

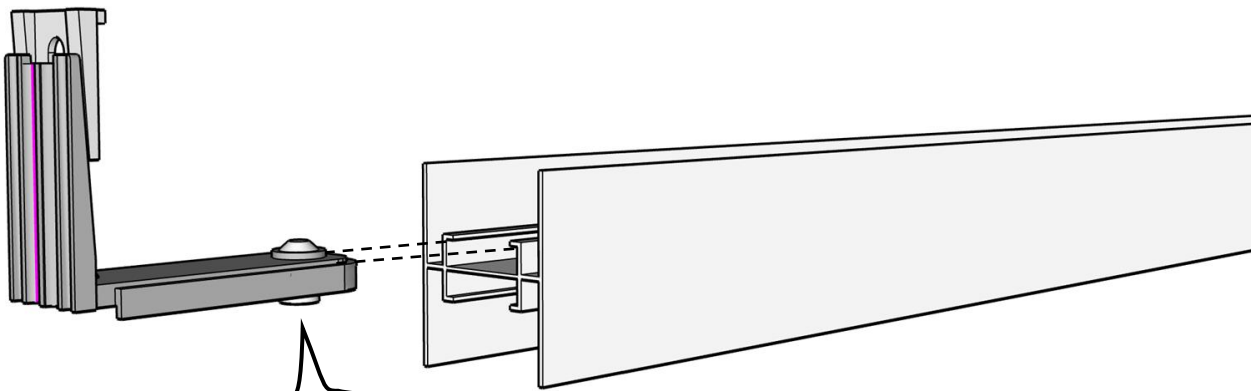

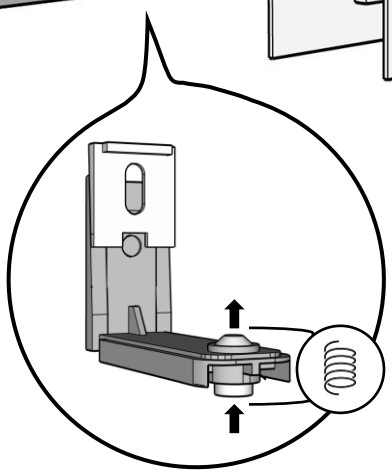

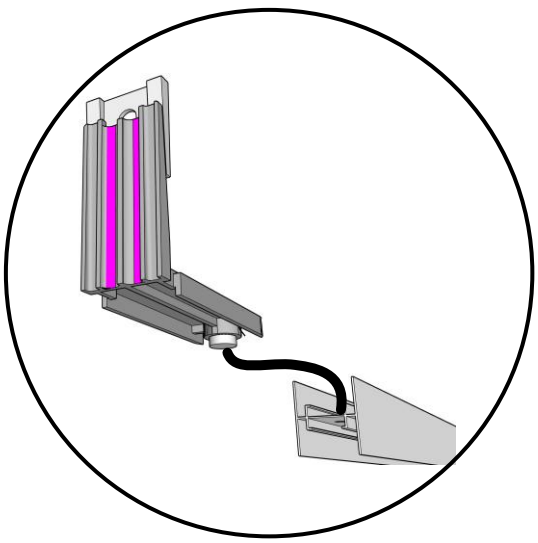

X16 AH-927

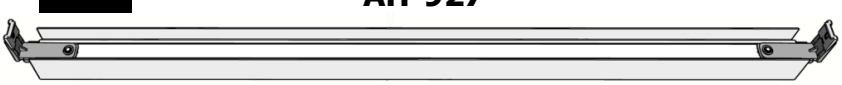

3

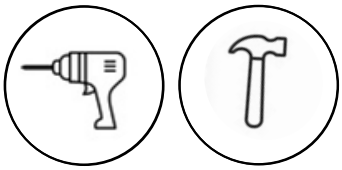

C3

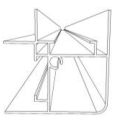	AL-2249	X2		AL-2095	X2	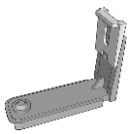	C-90	X8		D12X4B	X8

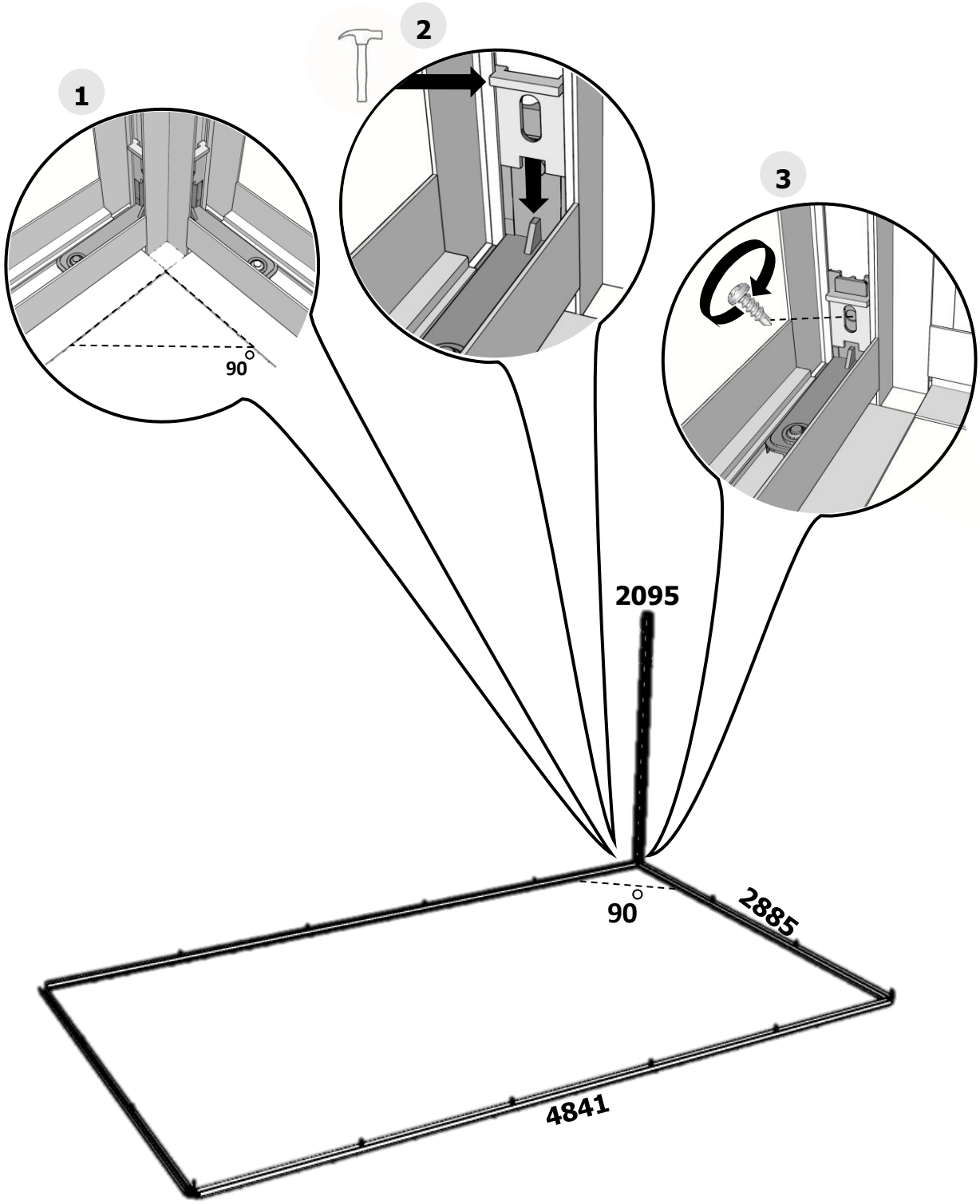

4

C4

AH-2095	X2	AH-2109	X2	AH-2160	X2	AH-2249	X2	AH-2212	X4	AH-2058	X4

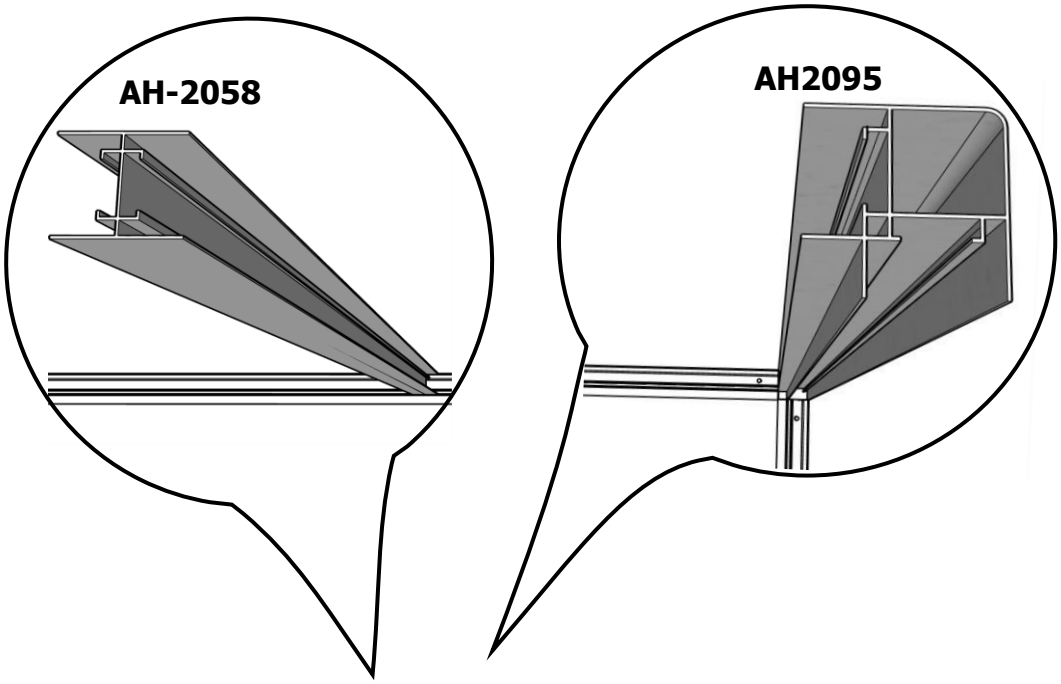

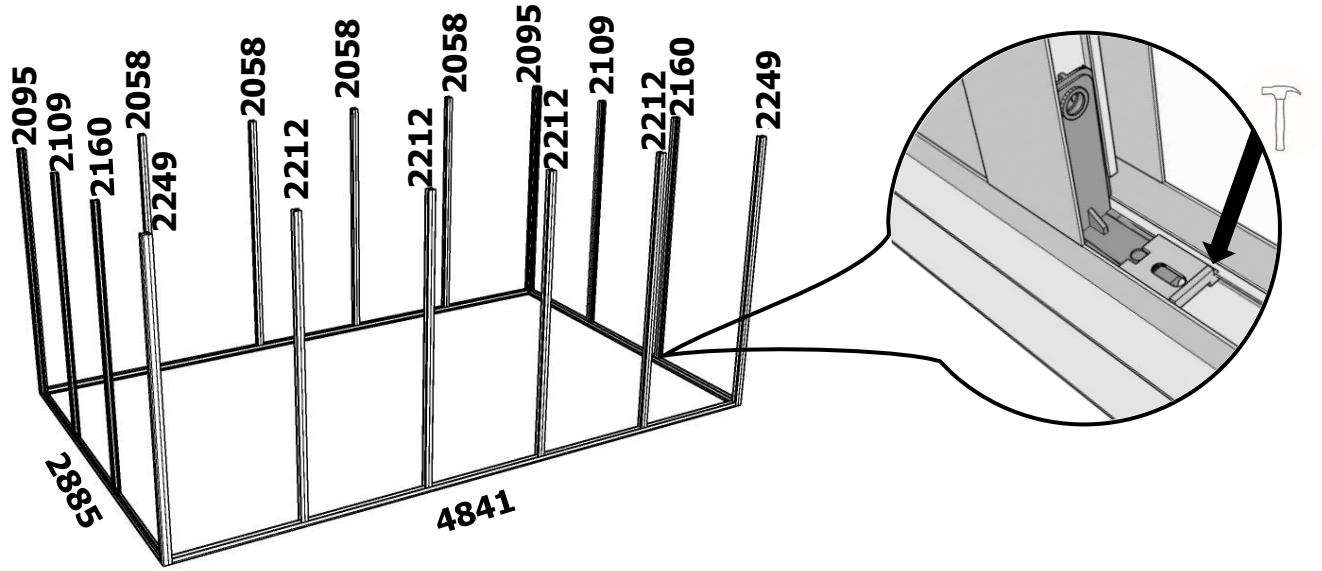

5



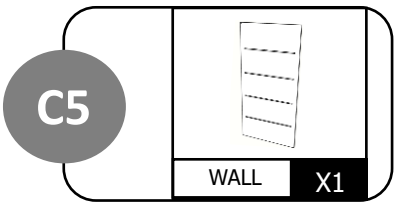

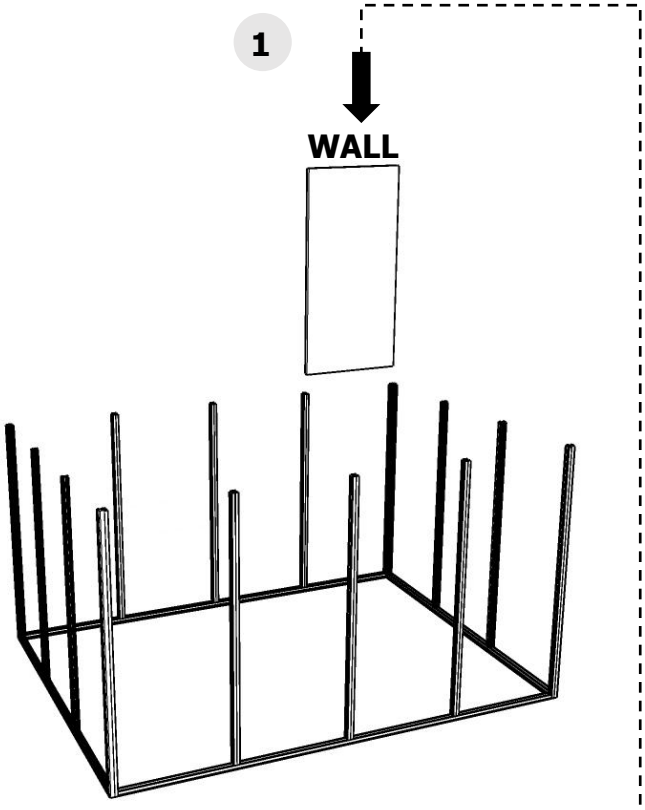

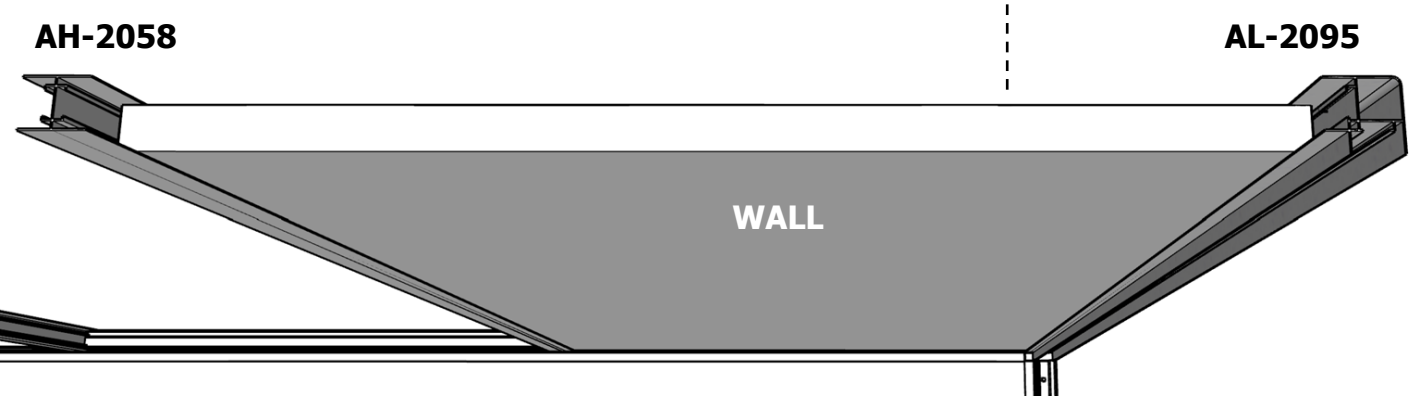

6

C6

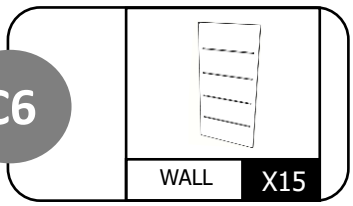
WALL
X15

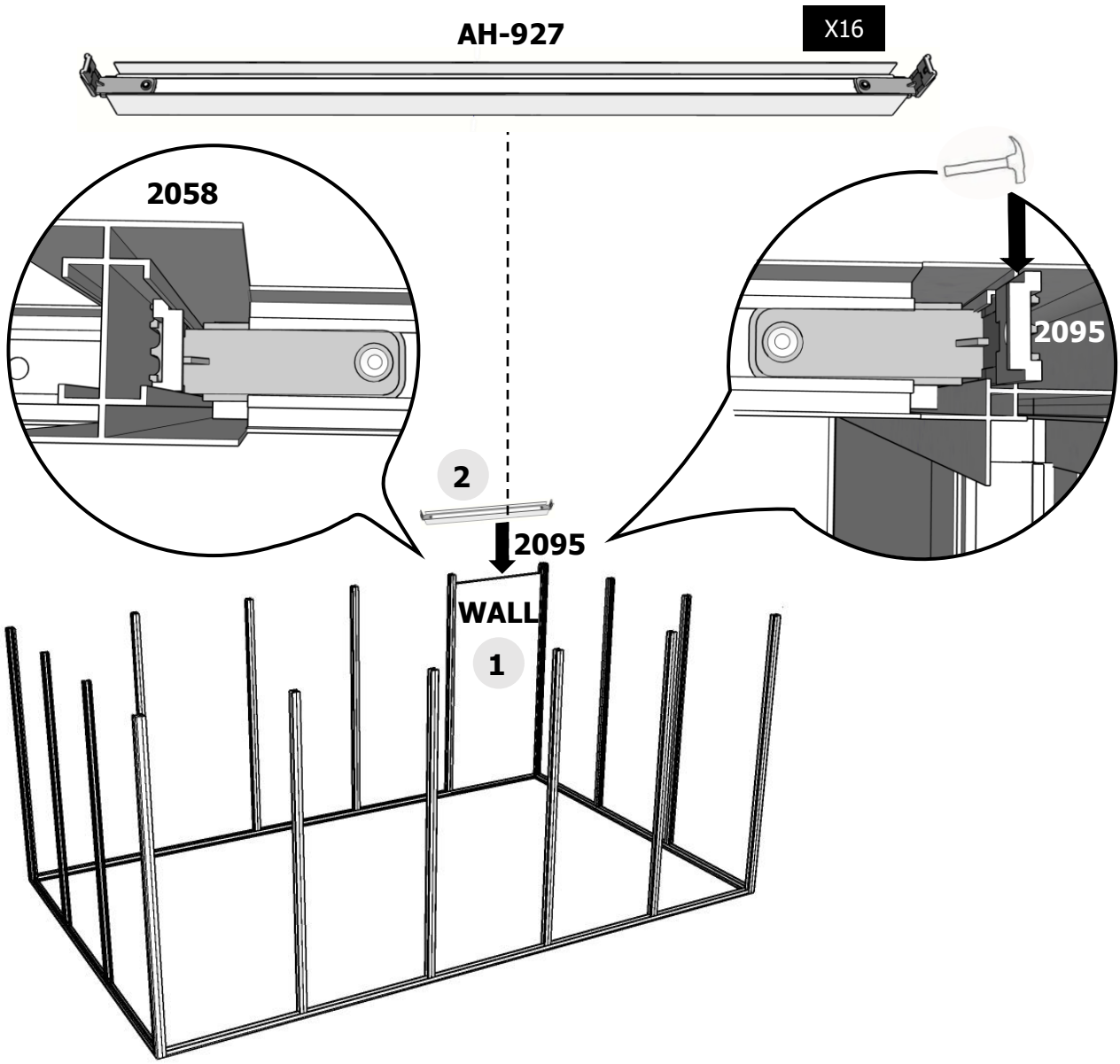
AH-927
X16
2058
2095
2
2095
WALL
1

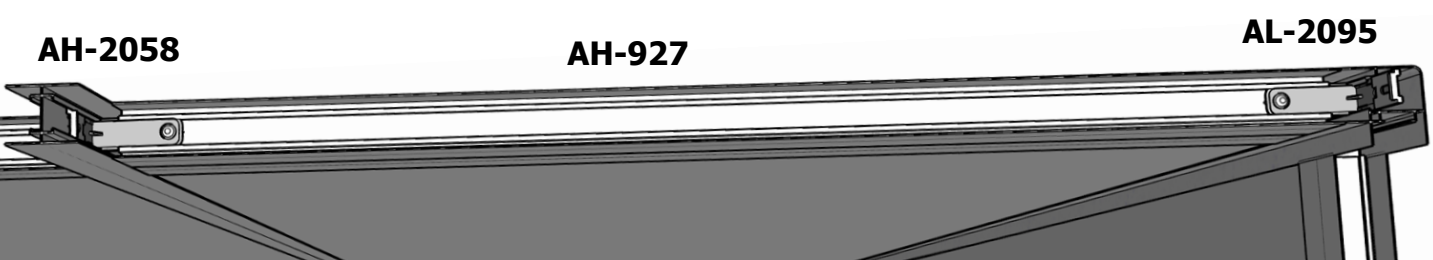
AH-2058
AH-927
AL-2095

7



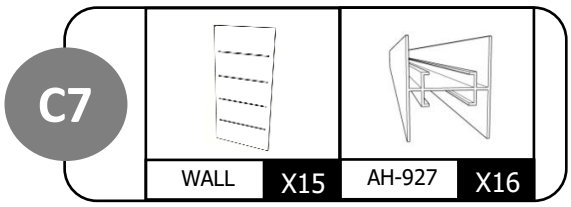
C7
WALL
X15
AH-927
X16

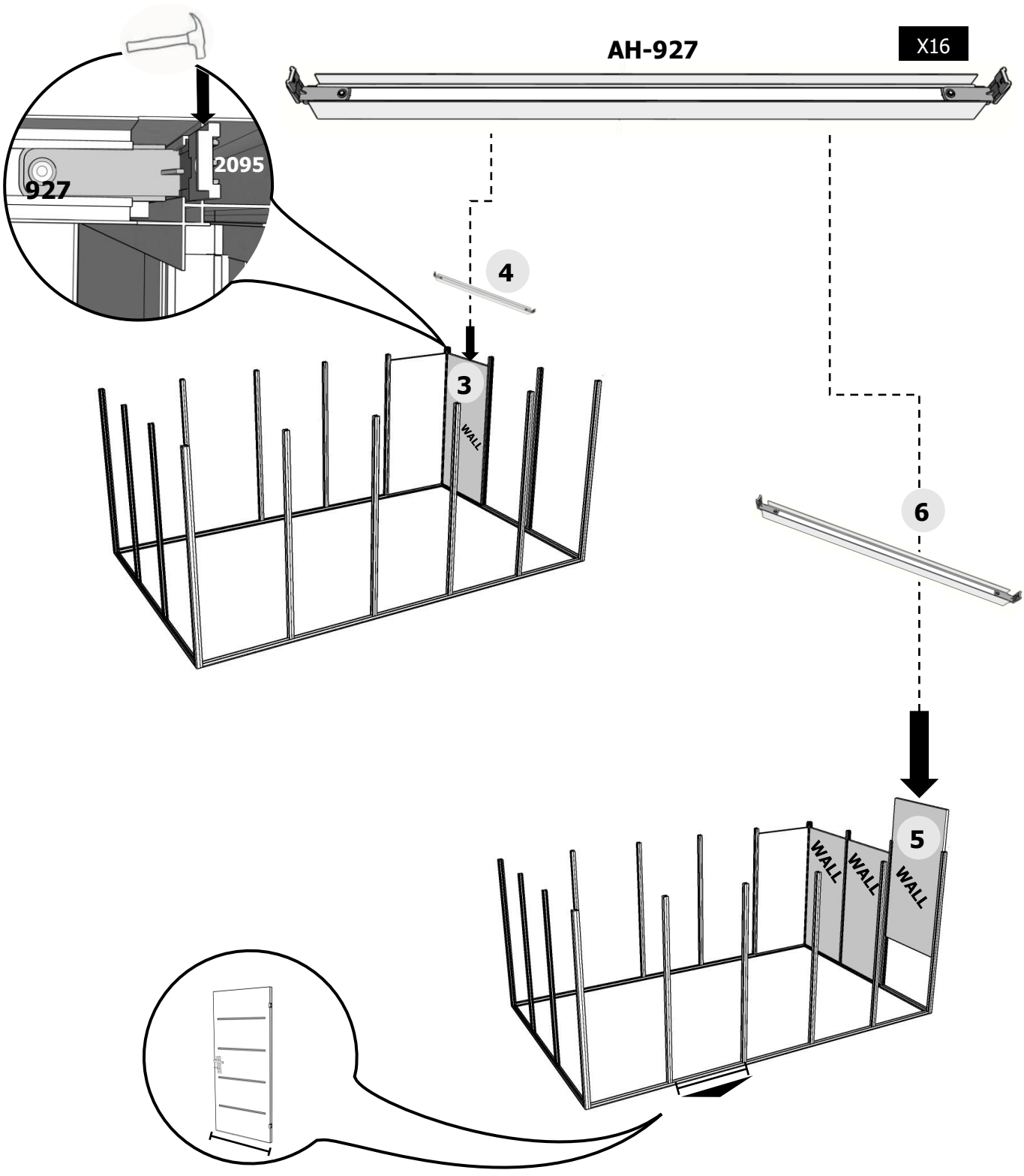
AH-927
X16
2095
927
4
3
WALL
6
5
WALL
WALL
WALL

8

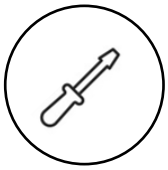

C8

DF	X2	AD-1974-R	X1	AD-1974-L	X1	AD-960-T	X1

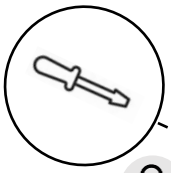

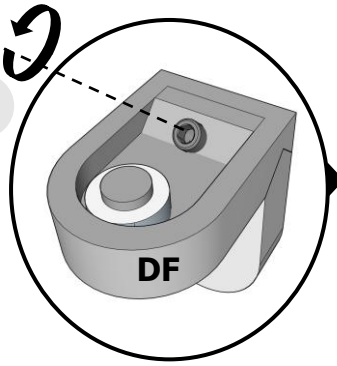

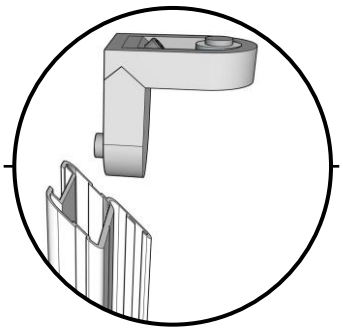

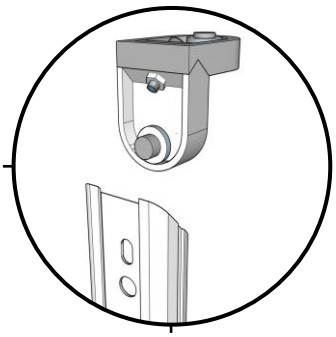

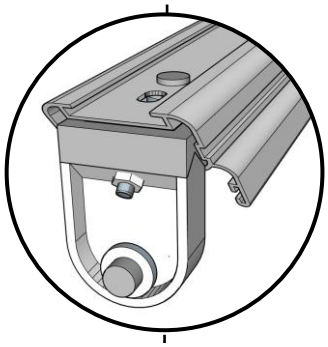

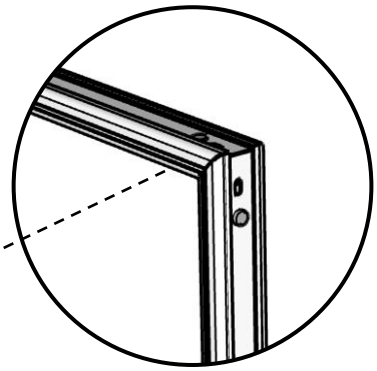

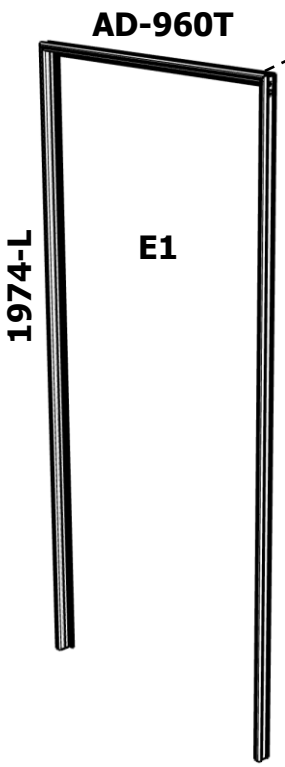

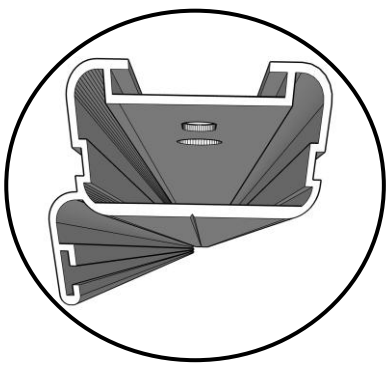

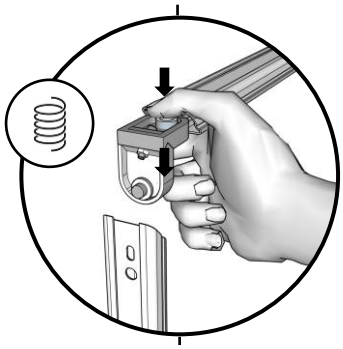

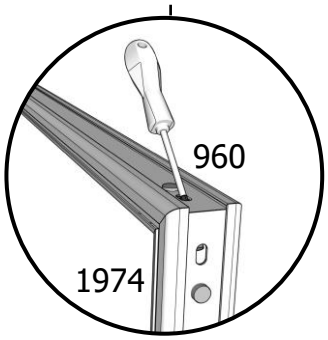

9



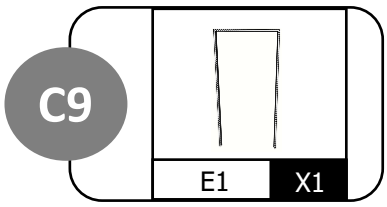
C9
E1
X1

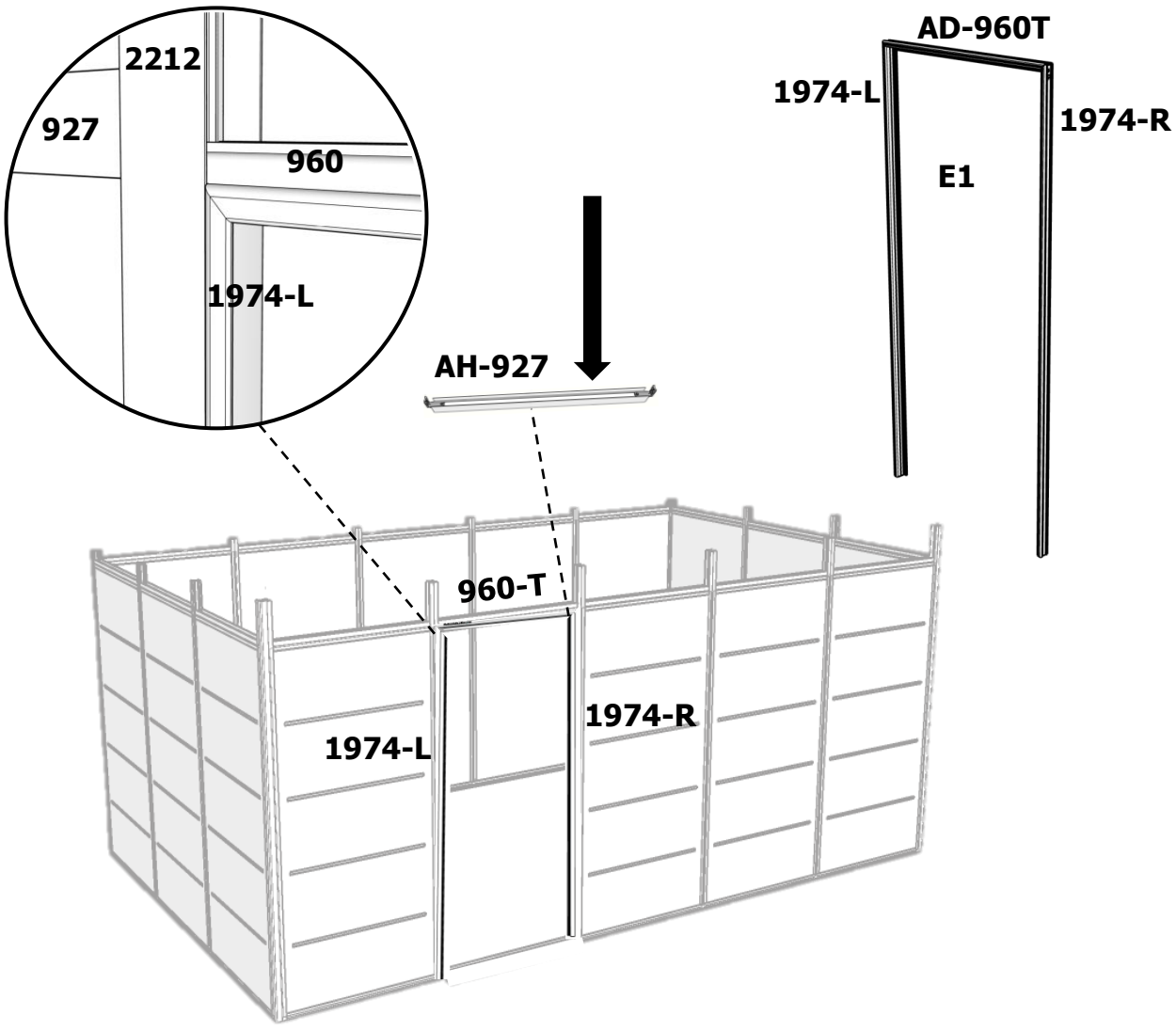
2212
927
960
1974-L
AH-927
AD-960T
1974-L
1974-R
E1
960-T
1974-L
1974-R

10

C10

	RAMP X1	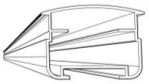	AD-917-F X1

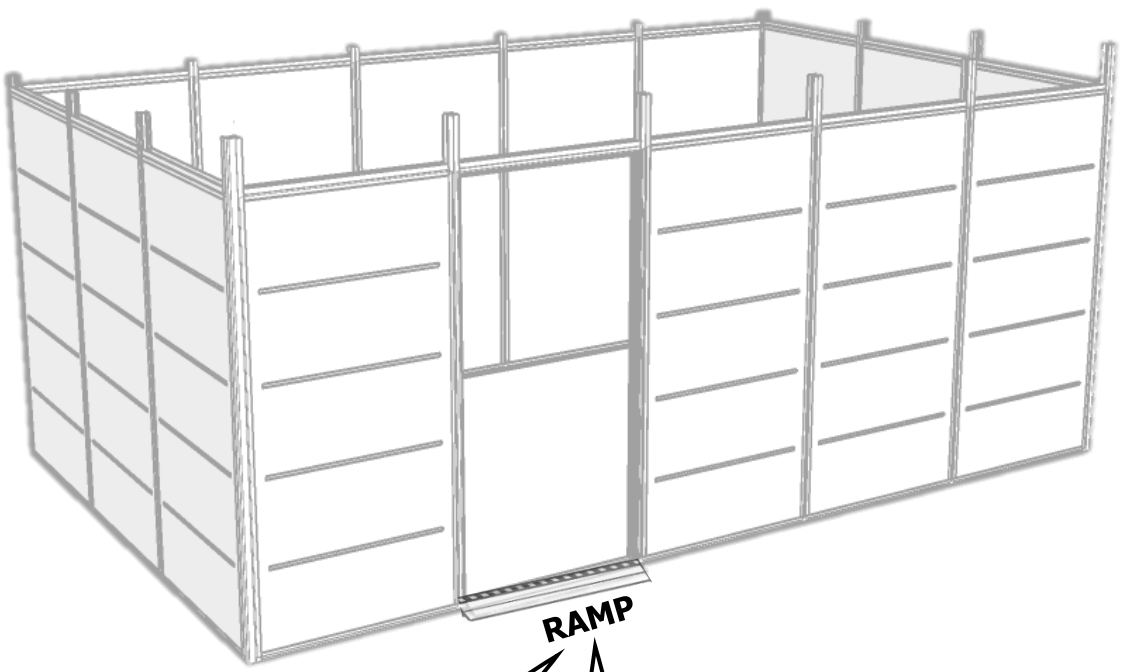

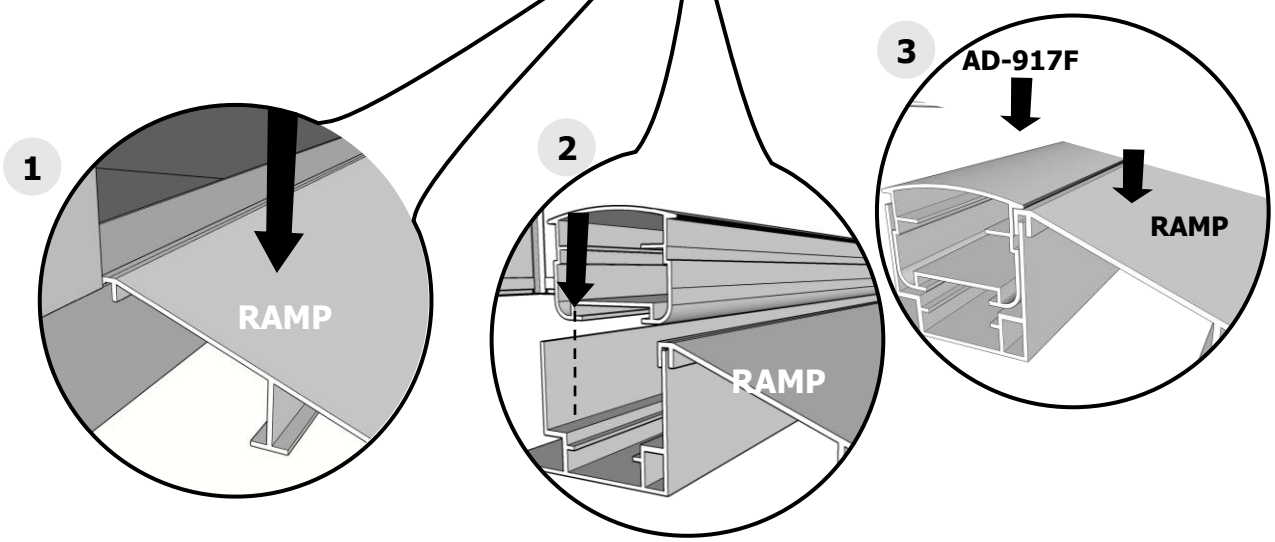

11



C11

HG-D	X2	HG-UP	X2	E1	X1	DOOR	X1	35X3.5	X8	D45X3.5	X8

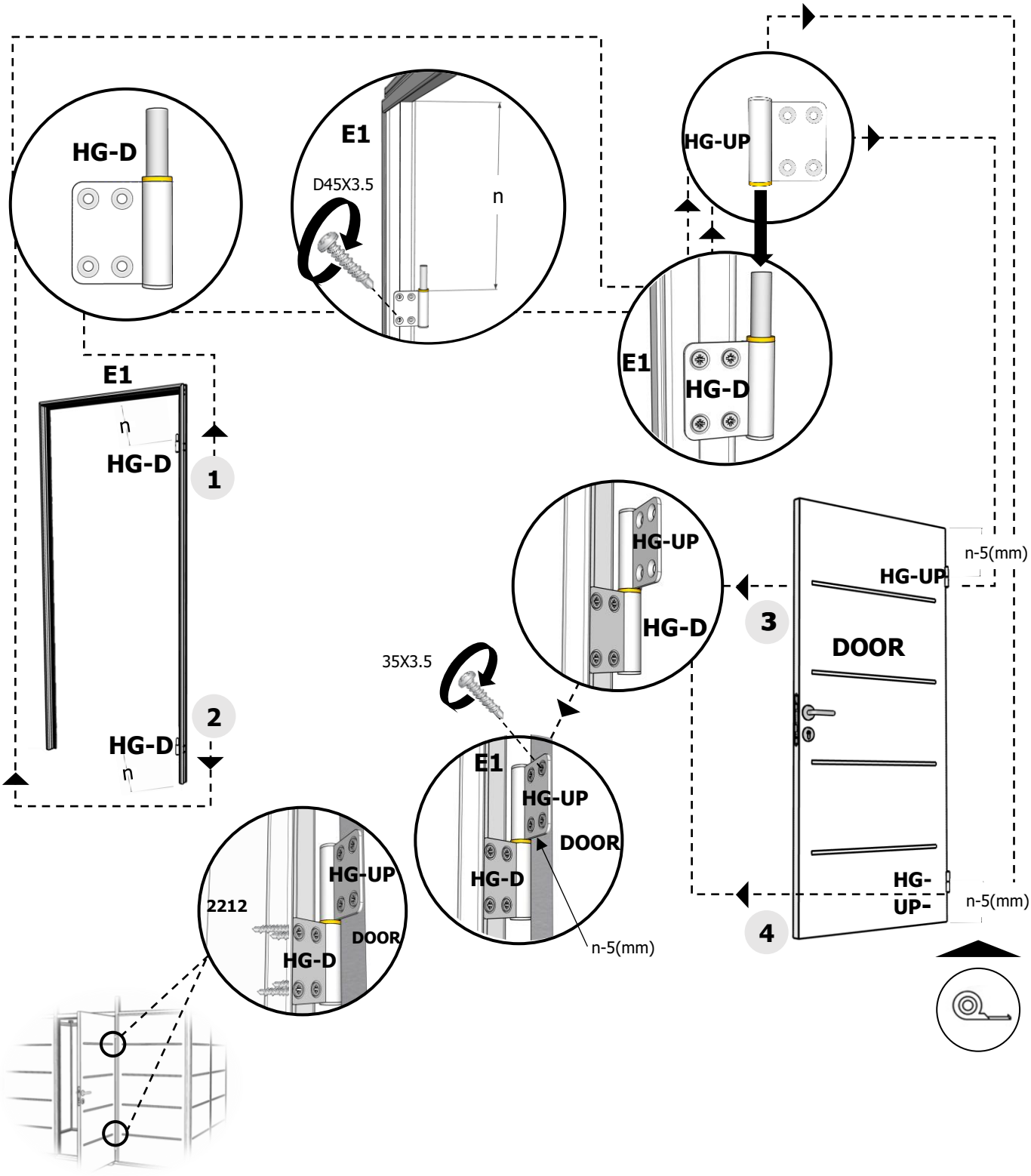

12

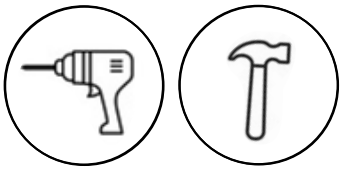

C12

19X3	X10	35X3.5	X2	N4	X2	N1	X1	N2	X1	N3	X1

N5	X1

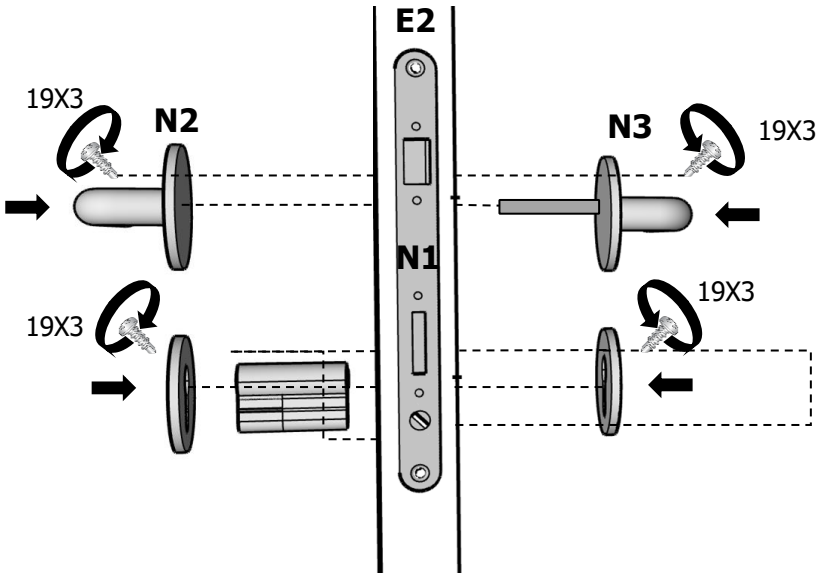

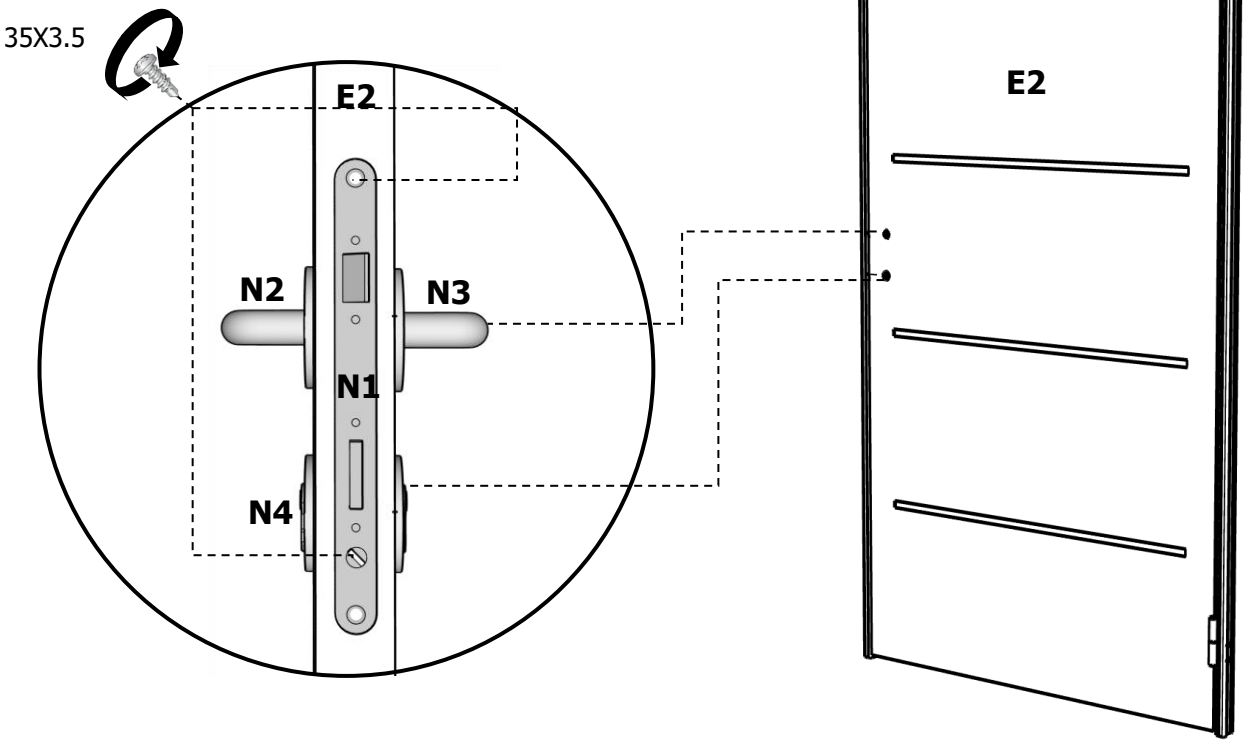

13



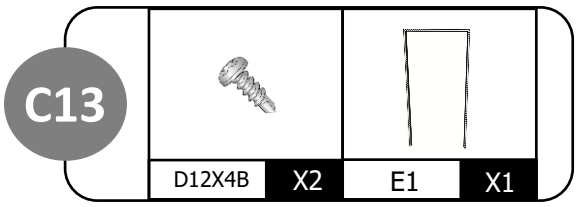
C13
D12X4B
X2
E1
X1

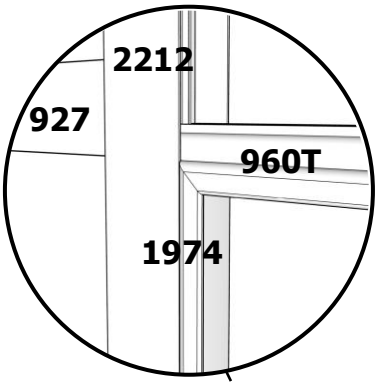
2212
927
960T
1974

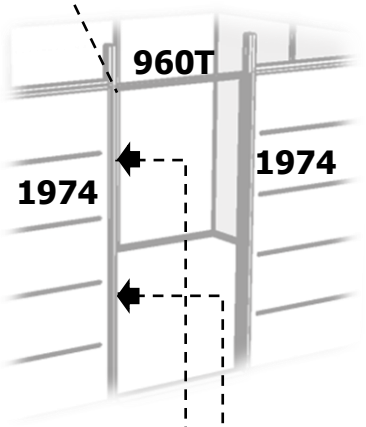
960T
1974
1974

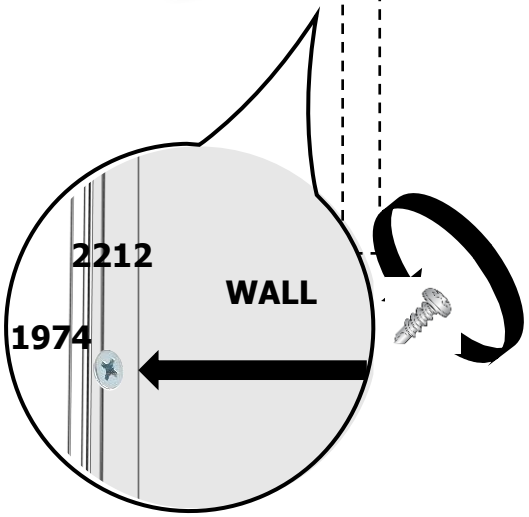
2212
WALL
1974

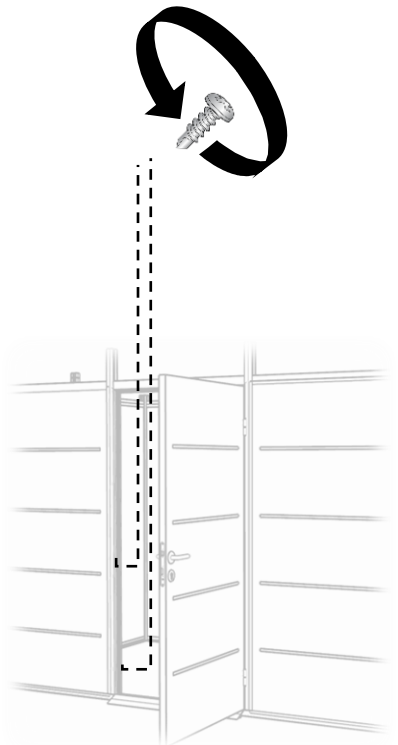

14

C14

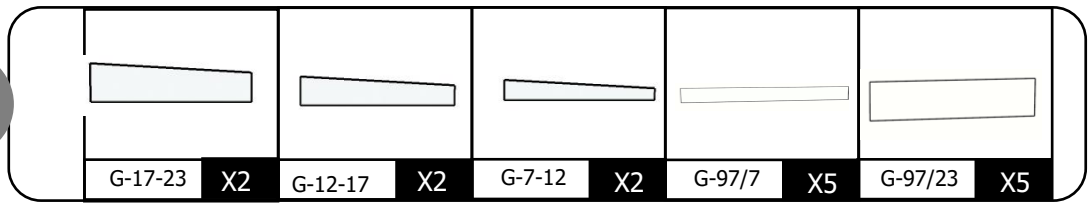
G-17-23 X2
G-12-17 X2
G-7-12 X2
G-97/7 X5
G-97/23 X5

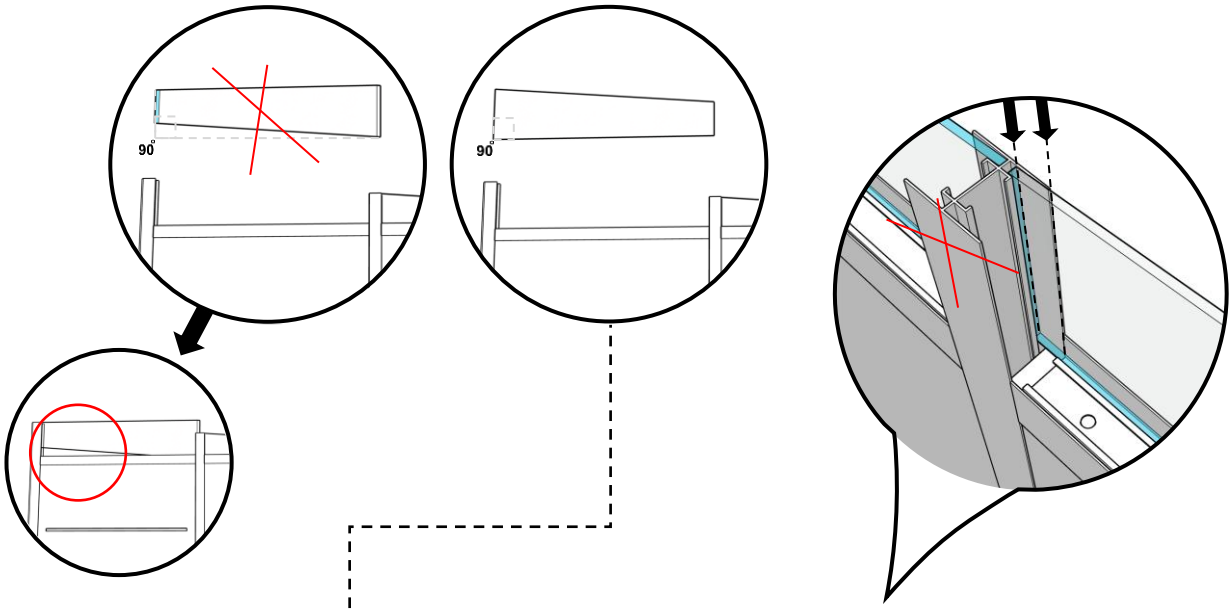
90°
90°

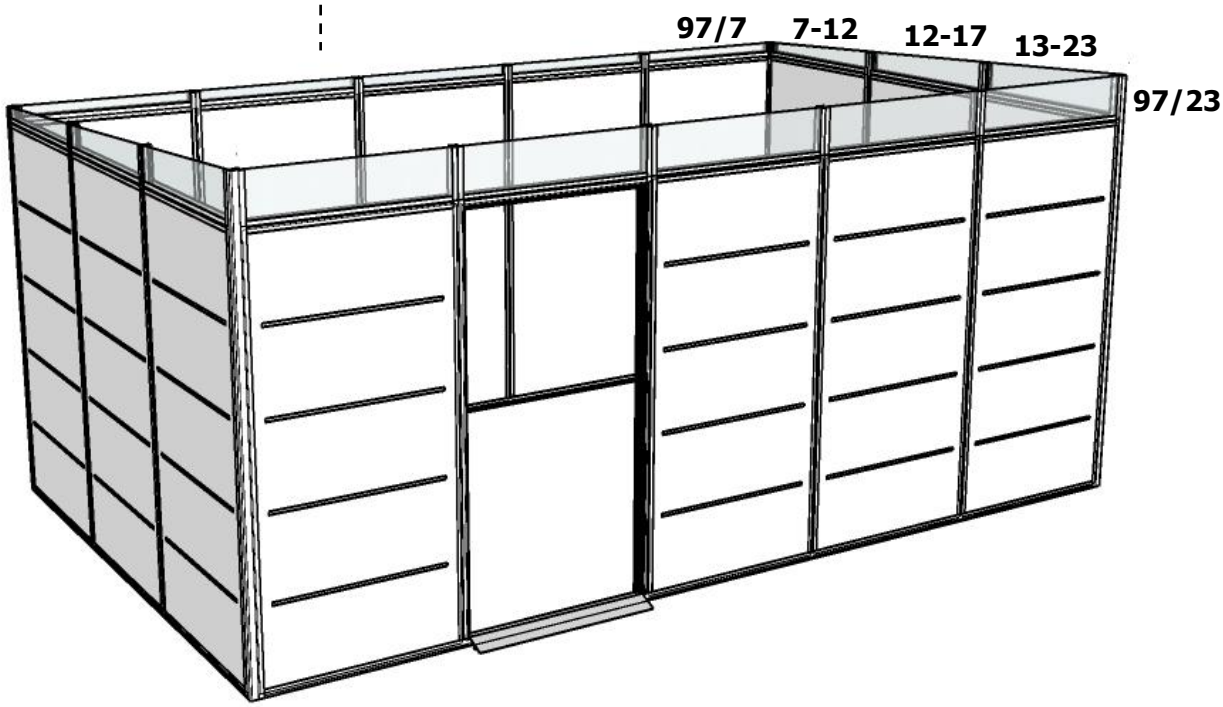
97/7
7-12
12-17
13-23
97/23

15

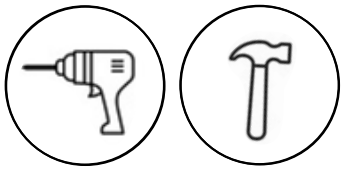

C15

D12X4B	X8	IS	X2	C-RF	X2	AR-4960	X2	AR-3008	X1

1

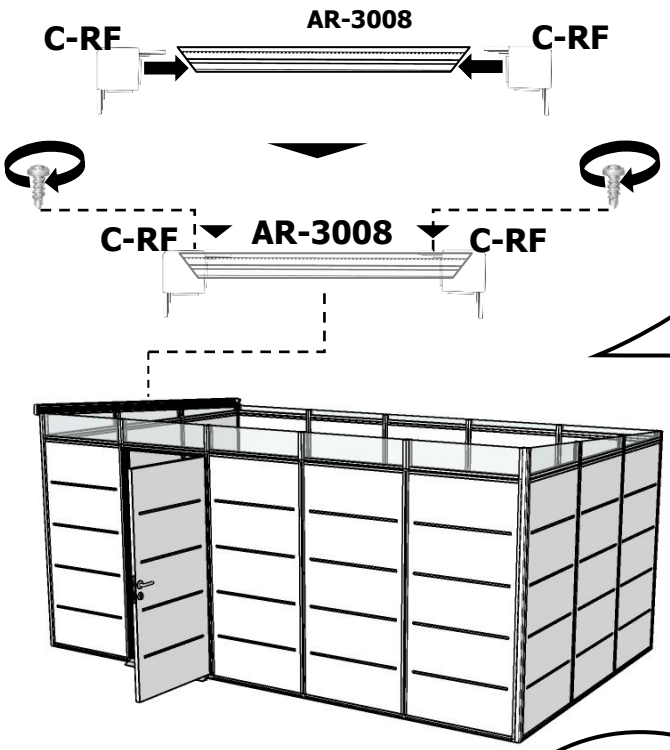

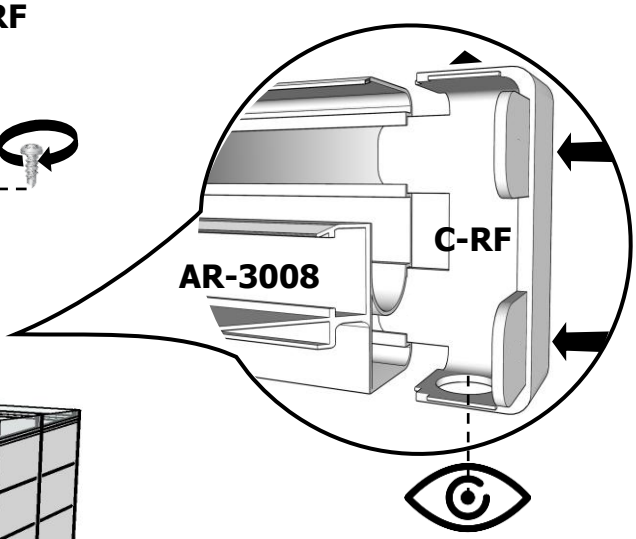

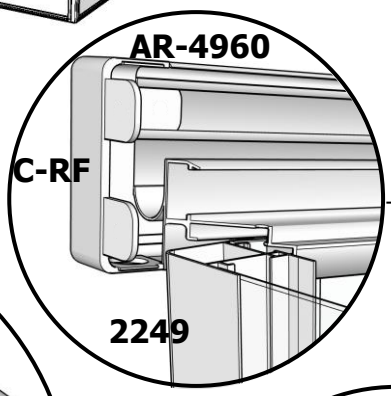

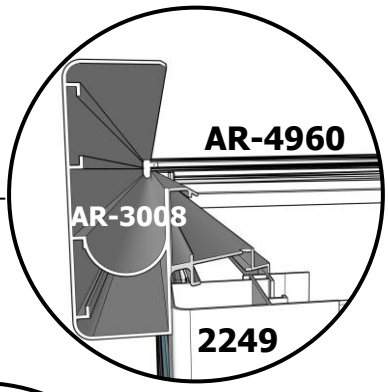

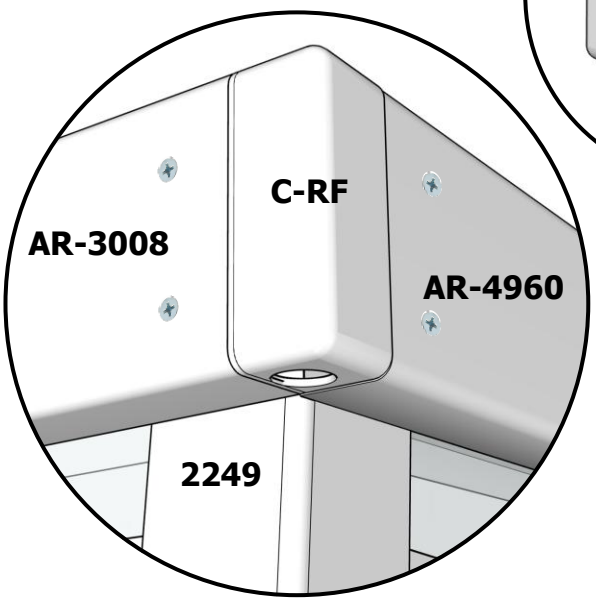

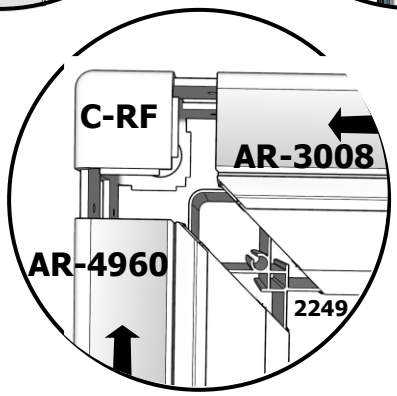

16



C16

AR-4960	X2	AR-3008	X1	IS	X2

2

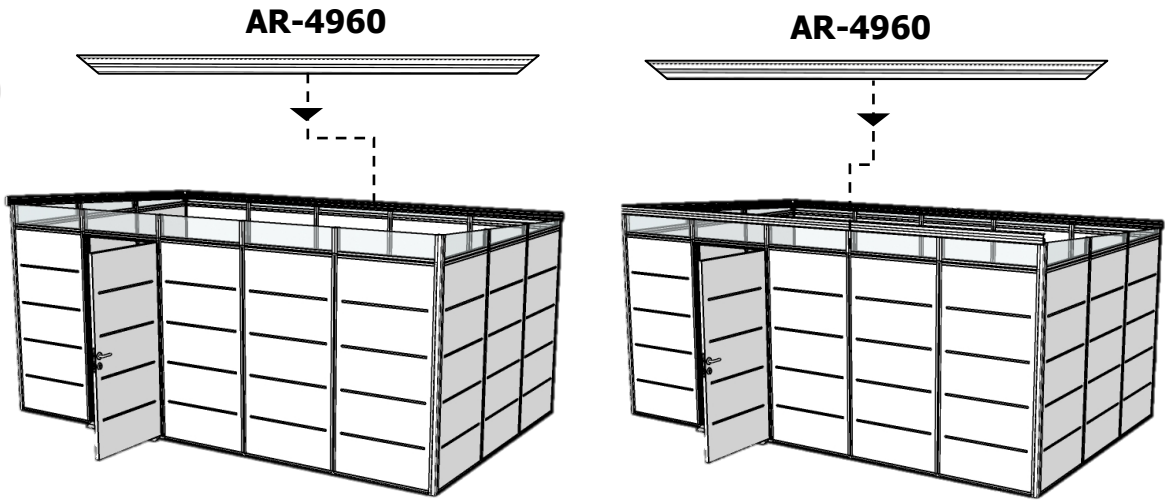

3

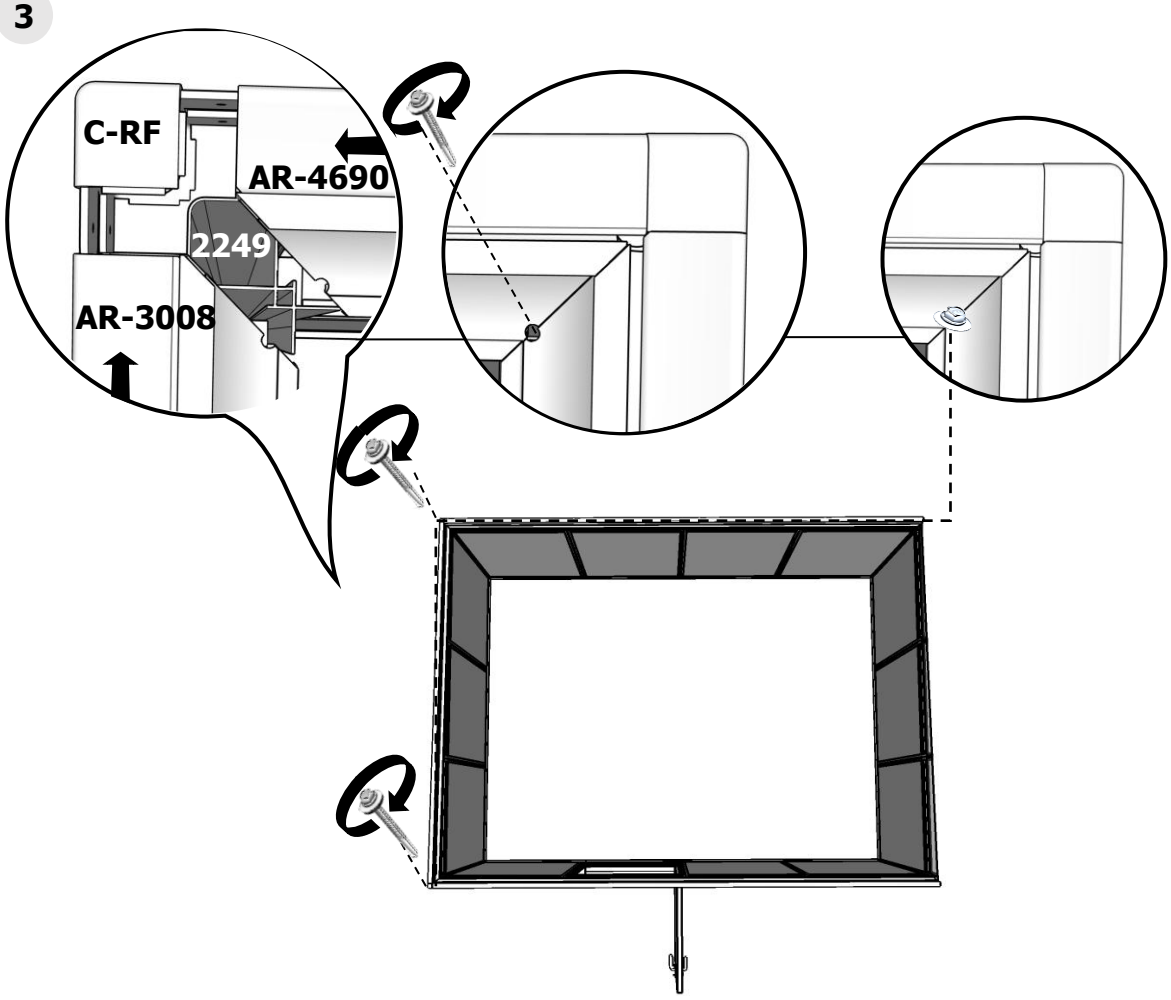

17

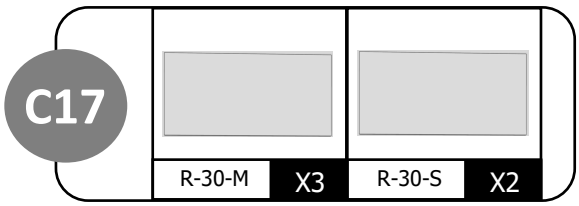
C17
R-30-M
X3
R-30-S
X2

4

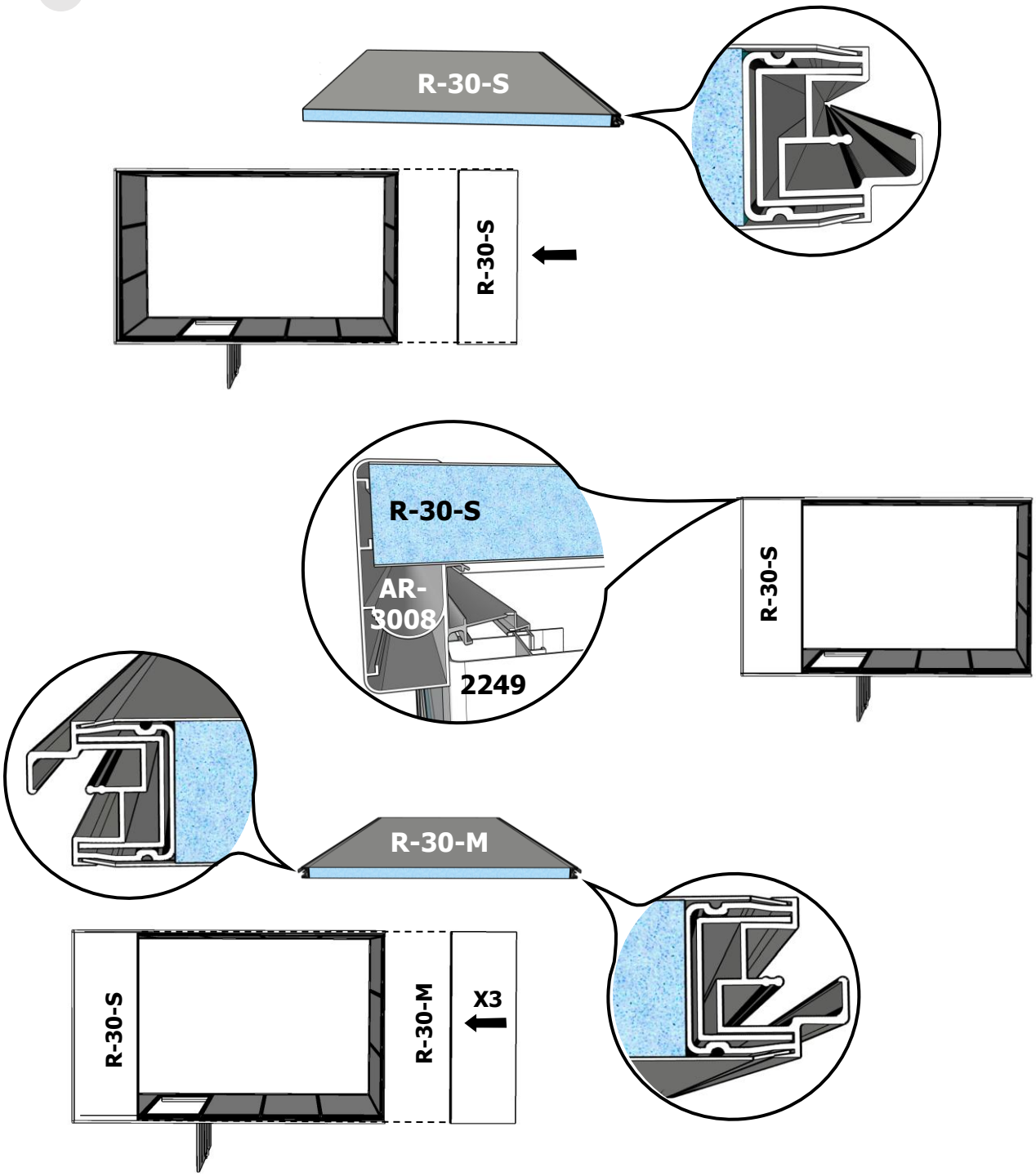
R-30-S
R-30-S
R-30-S
AR-3008
2249
R-30-S
R-30-M
R-30-S
R-30-M
X3

18

C18

D20X4B	X4	D12X4B	X4	C-RF	X2	AR-3008	X1	R-30-M	X3	R-30-S	X2

5

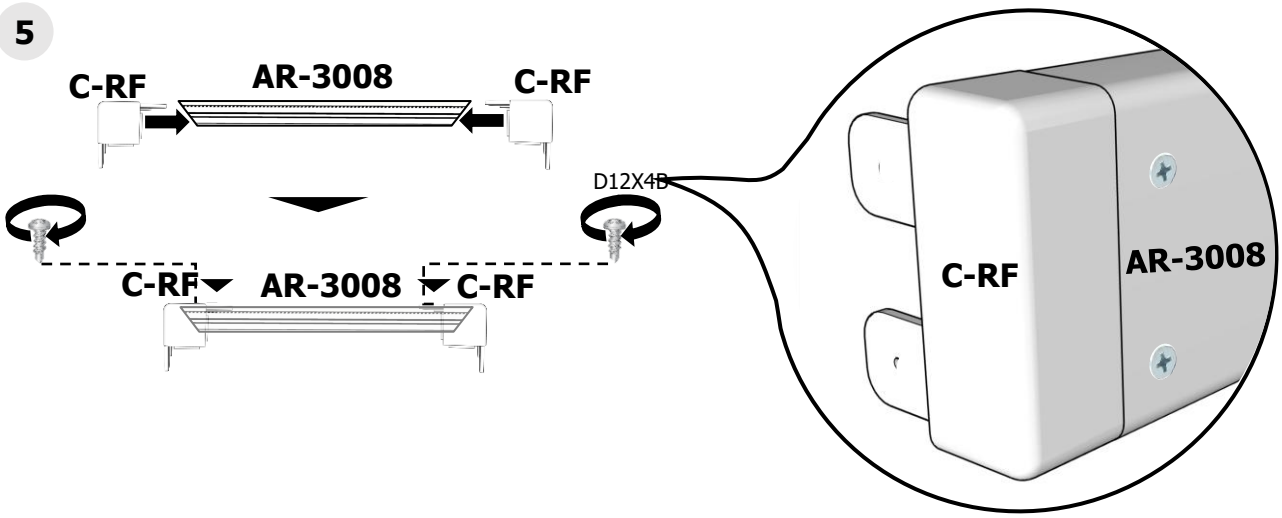

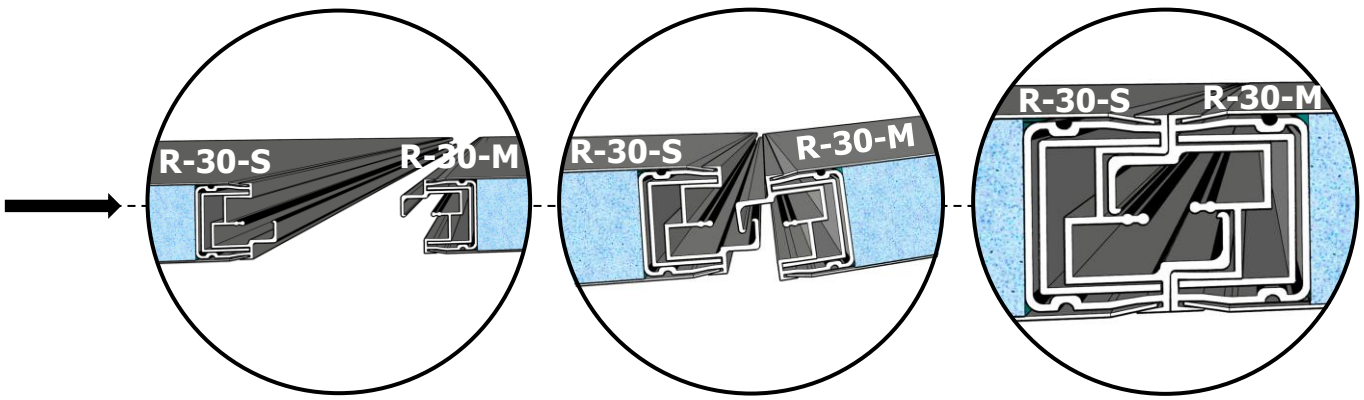

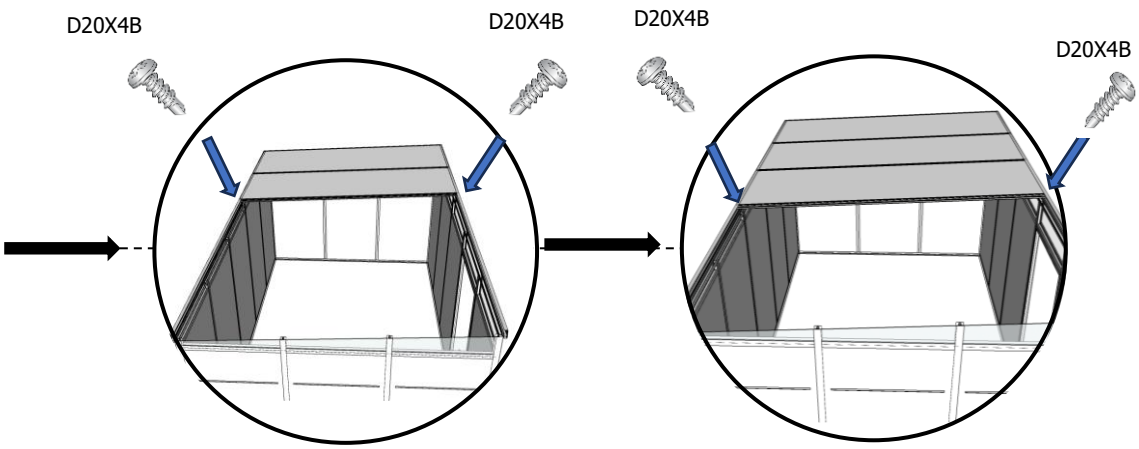

19

C19

D20X4B	X4	D12X4B	X4	C-RF	X2	AR-3008	X1	R-30-M	X3	R-30-S	X2

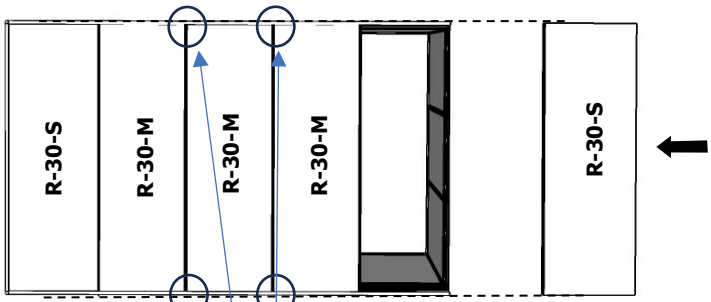

5



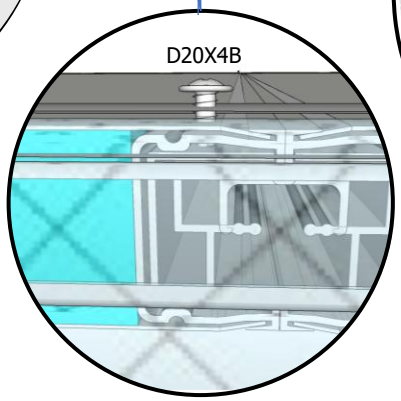

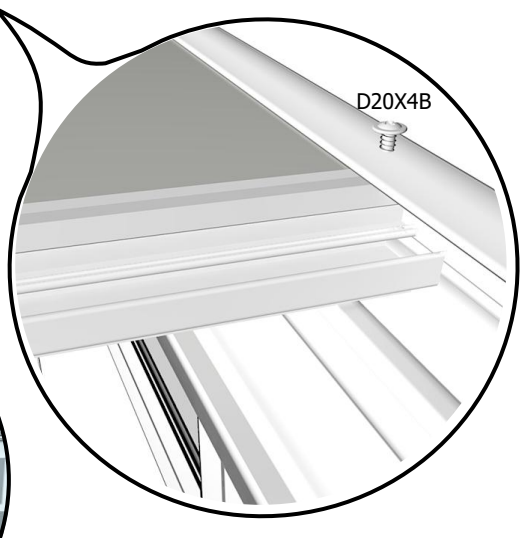

6

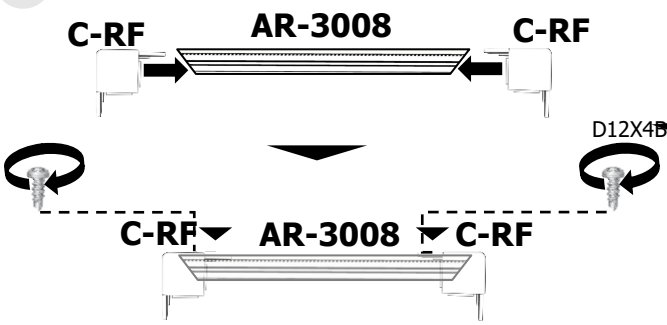

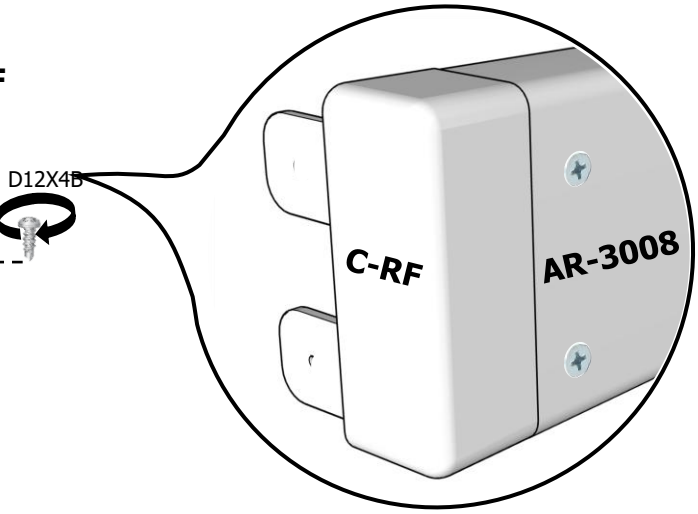

20

C20

S-H43X6	X2	D12X4B	X4	C-RF	X2	AR-3008	X1

7

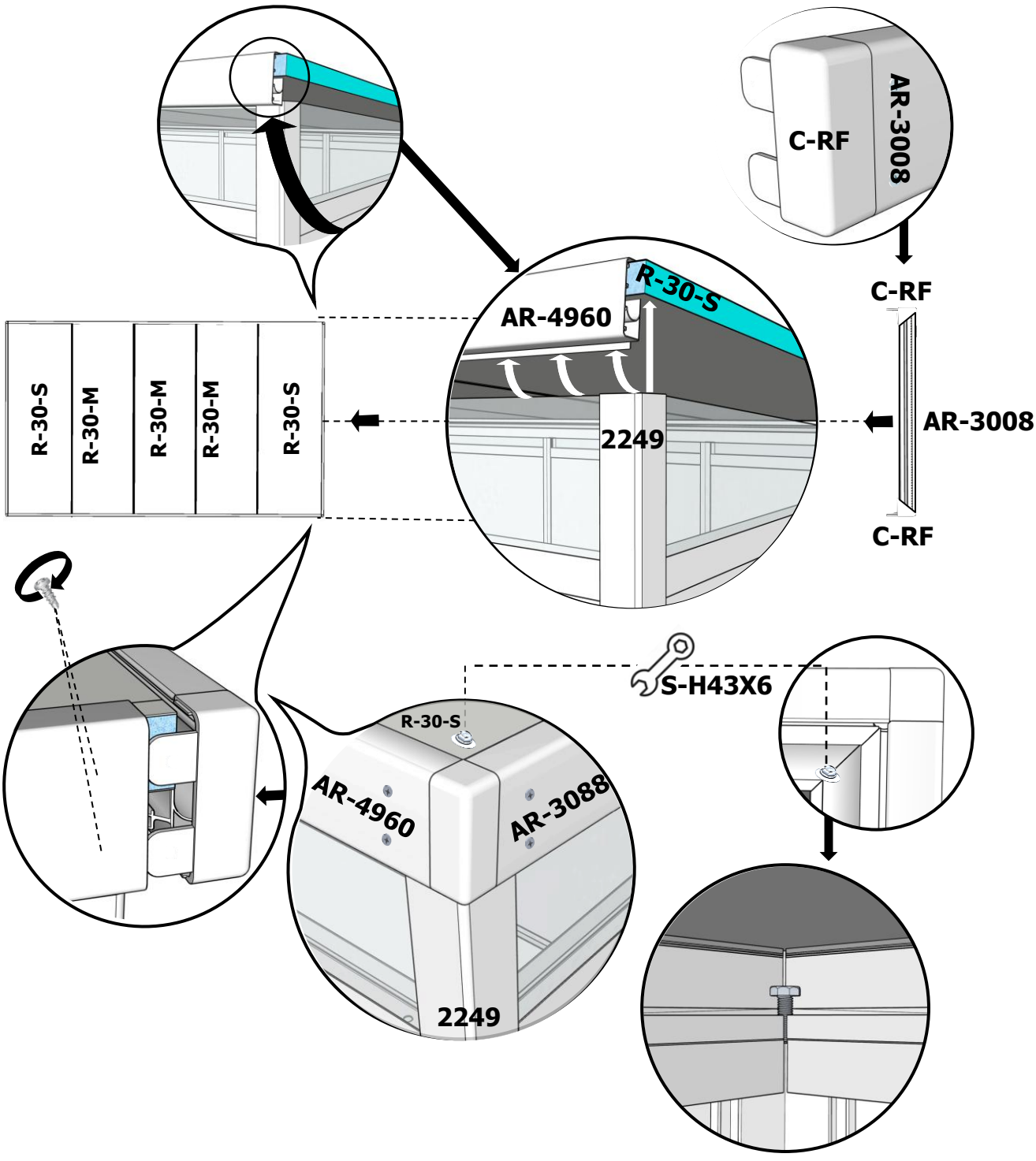

21

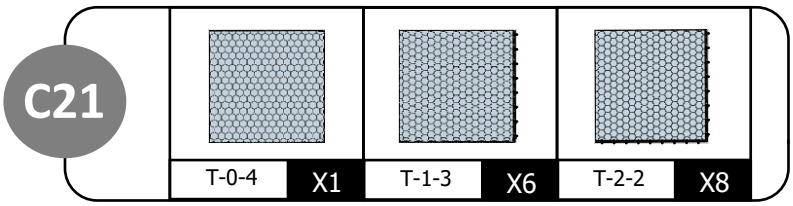
C21
T-0-4
X1
T-1-3
X6
T-2-2
X8

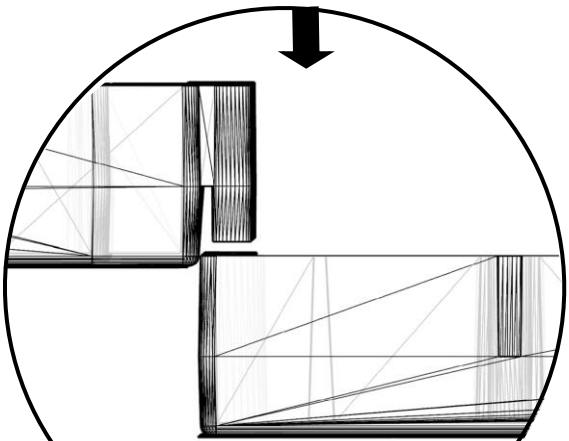

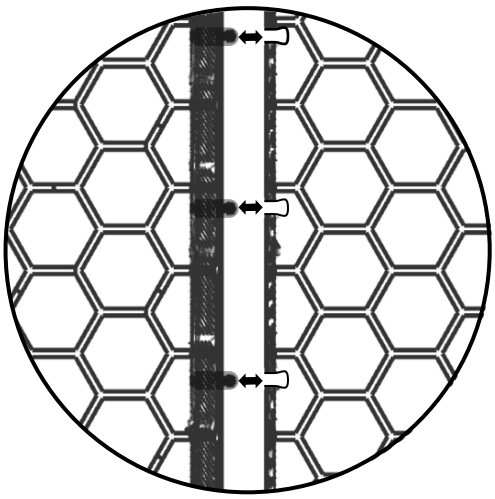


1
T-2-2
2
T-2-2
3
T-2-2
4
T-2-2
5
T-1-3
6
T-2-2
7
T-2-2
8
T-2-2
9
T-2-2
10
T-1-3
11
T-1-3
12
T-1-3
13
T-1-3
14
T-1-3
15
T-0-4
2885
4841

EVERBOX

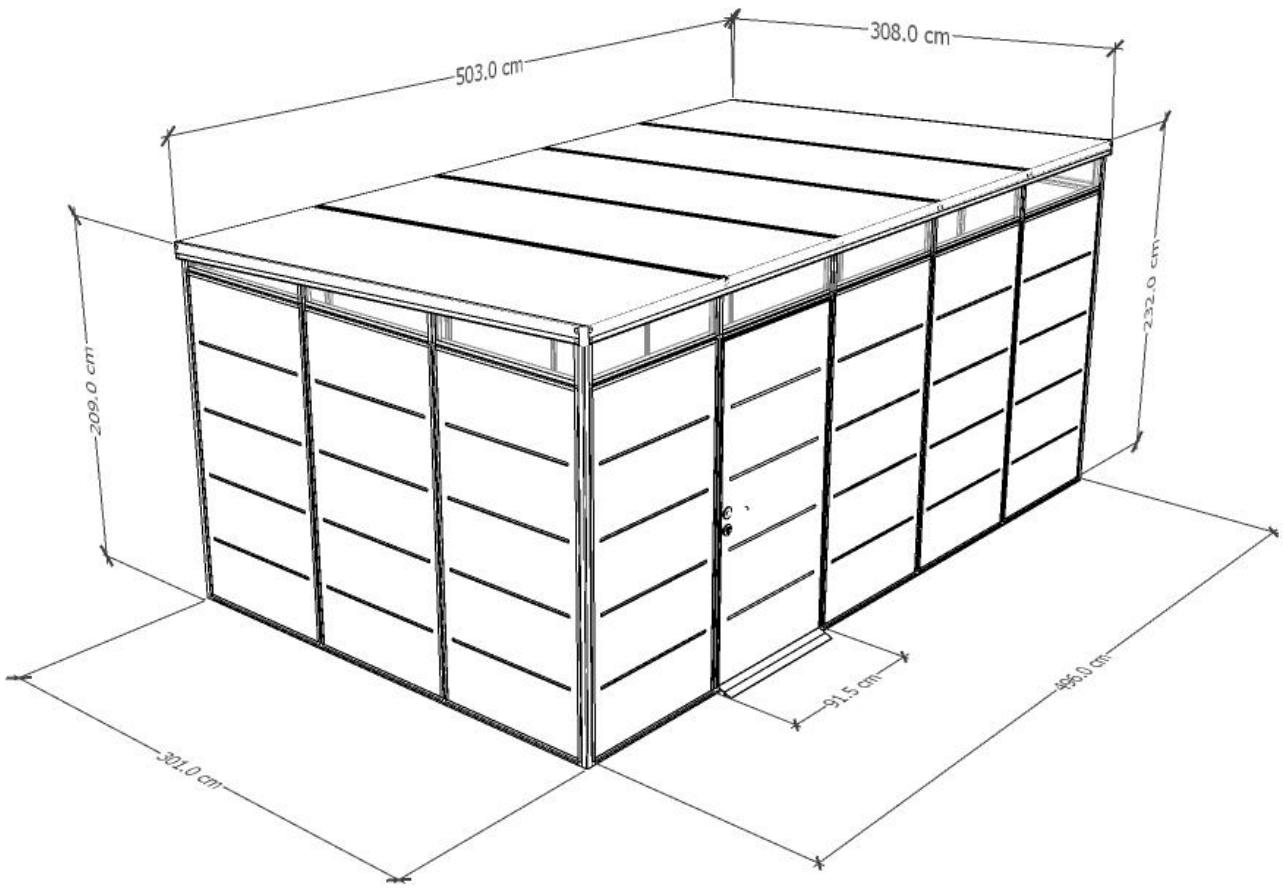

EVERBOX – 5X3