EVERBOX

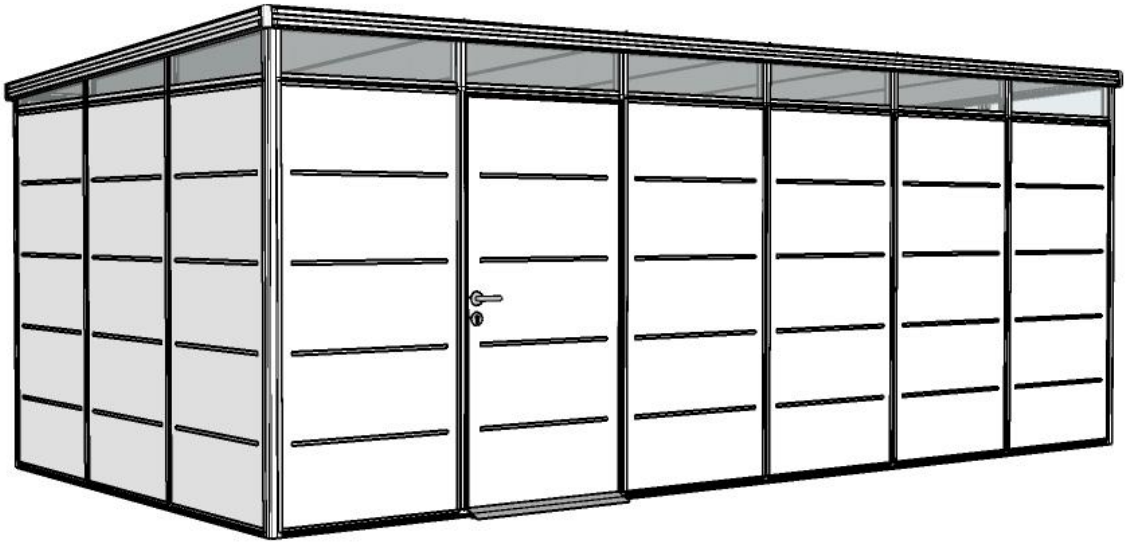

EVERBOX – 6X3

Preparations:

1	The surface on which the warehouse will be built should be straight and stable.
2	2 people are needed to assemble the warehouse.
3	Remove the nylon coating from the parts, before construction.
4	Plan the location of the door in advance.
5	Prepare the slope direction of the warehouse roof.
6	Go through the equipment list and make sure all the parts are there.

Tool list:

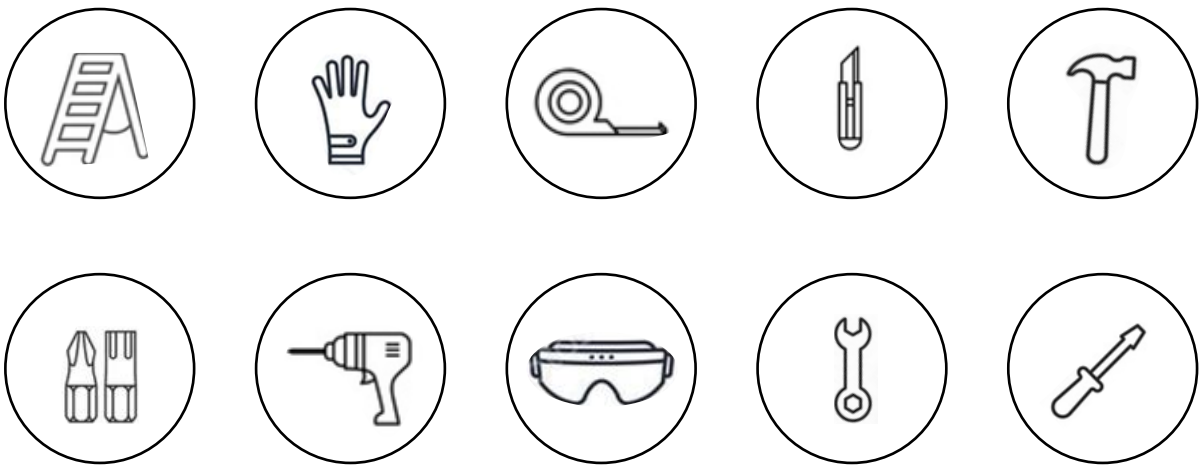

				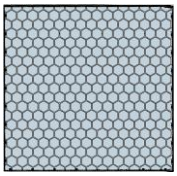	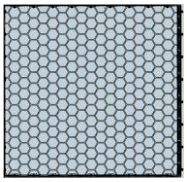
P-DOOR / X1	P-WALL / X17	P-R-30-S / X2	P-R-30-M / X4	T-0-4 / X1	T-1-3 / X7

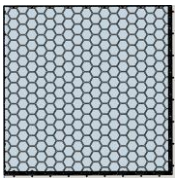					
T-2-2 / X10					

A-SET-SIDE-30					
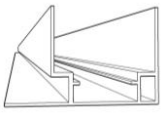				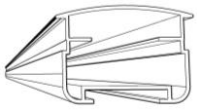	
AF-2885 / X2	AH-2109 / X2	AH-2160 / X2	AH-927 / X6	AD-917F / X1	AR-3008 / X2
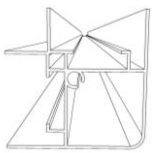	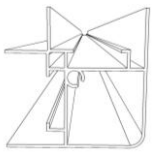				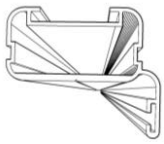
AL-2095 / X2	AL-2249 / X2	AD-RAMP / X1	AD-1974L / X1	AD-1974R / X1	AD-960T / X1

A-SET-FACE-60					
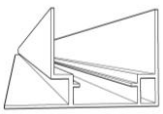					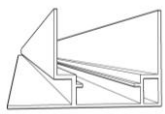
AF-3320 / X1	AH-2058 / X5	AH-2212 / X5	AH-927 / X12	AR-2971 / X4	AF-2500 / X1
G-SET-30/60					
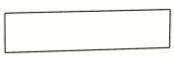					
G-97/23 / X6	G-97/7 / X6	G-17-23 / X2	G-12-17 / X2	G-7-12 / X2	

H-SET-3060					
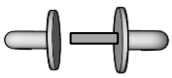		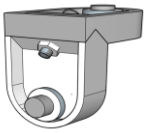		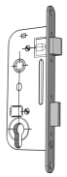	
C-HND / X1	C-90 / X58	C-DF / X2	C-RF / X4	C-LOOK / X1	S-D12X4 / X50
					
S-D20X4/ X10	S-35X3.5 / X10	S-D45X3.5 / X8	S-19X3 / X10	S-H30X6 / X2	S-H43X6 / X2
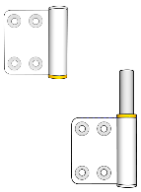					
C-HG-R / X1	C-EXT / X4	C-AL-EX / X2			

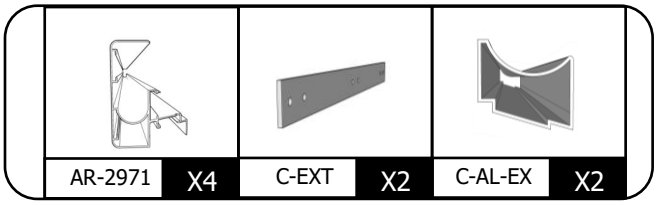
AR-2971
X4
C-EXT
X2
C-AL-EX
X2

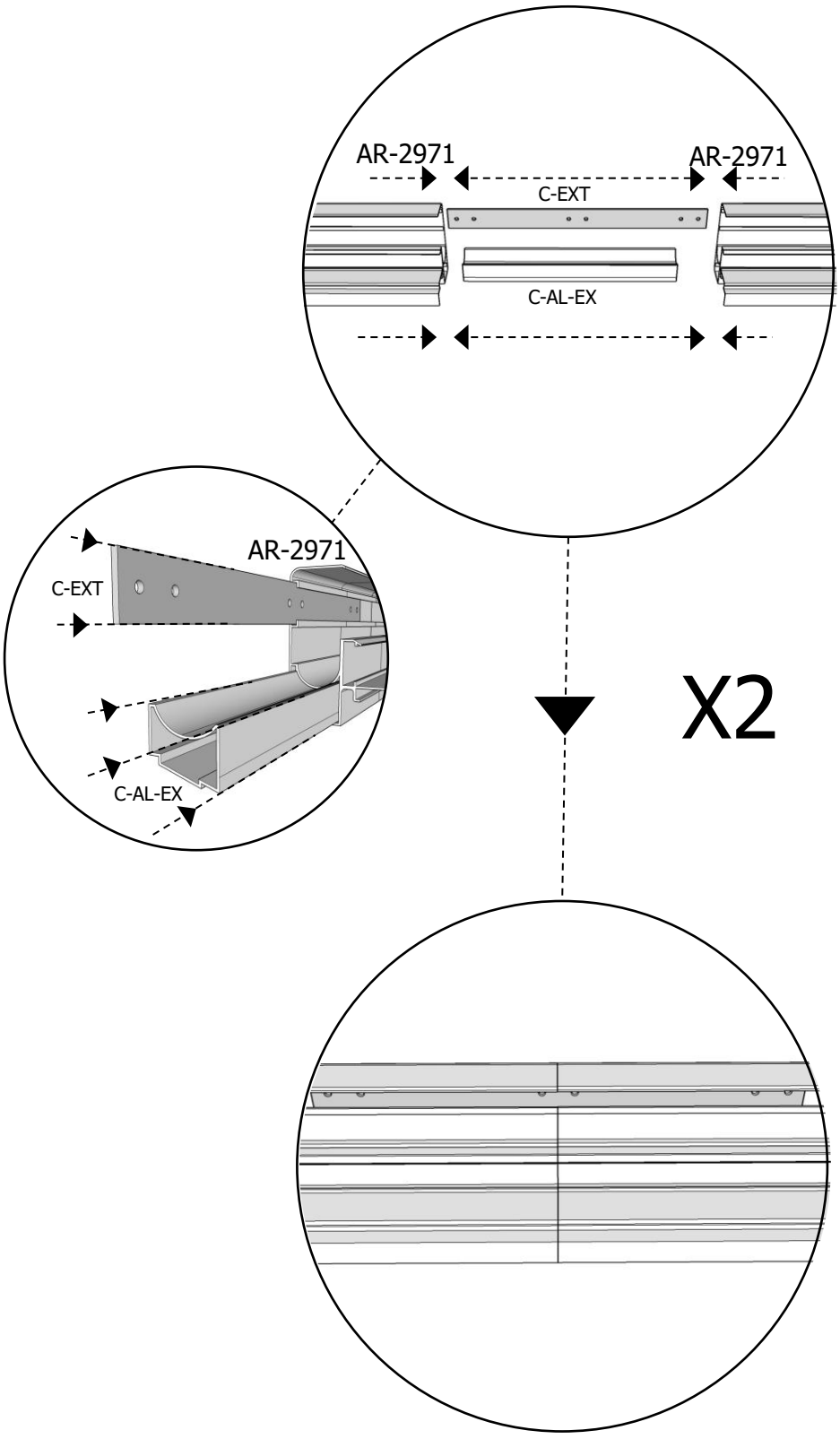
AR-2971
AR-2971
C-EXT
C-AL-EX
AR-2971
C-EXT
C-AL-EX
X2

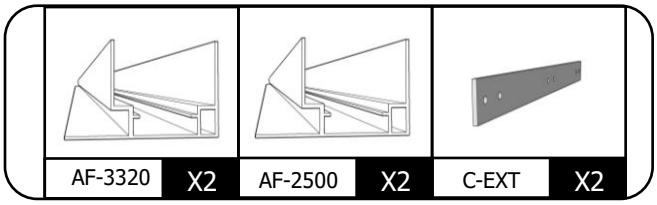
AF-3320
X2
AF-2500
X2
C-EXT
X2

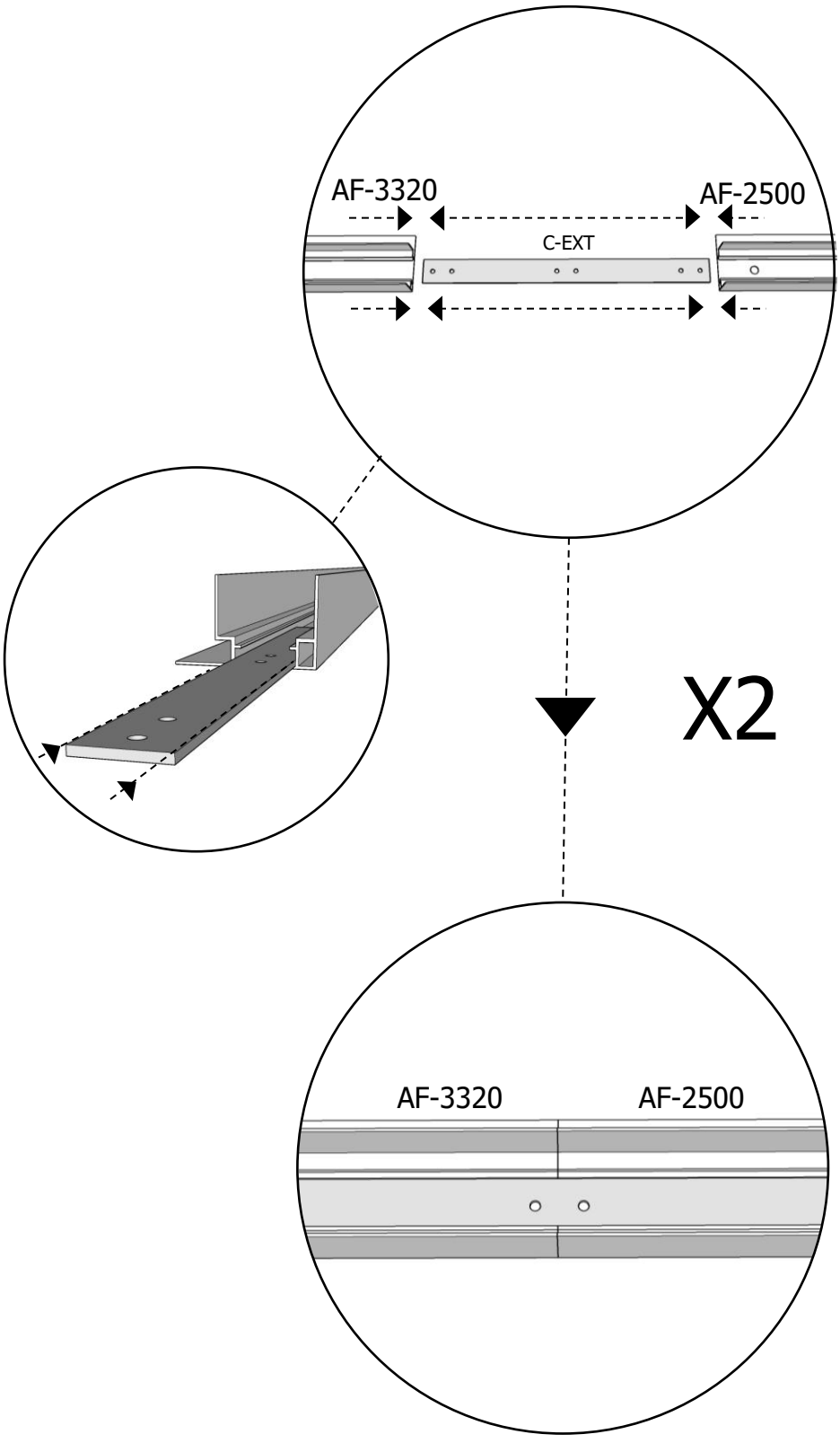
AF-3320
AF-2500
C-EXT
X2
AF-3320
AF-2500

1

C1

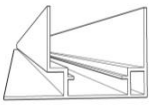	AF-3320	X2	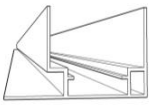	AF-2500	X2	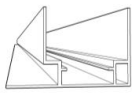	AF-2885	X2		C-90	x36

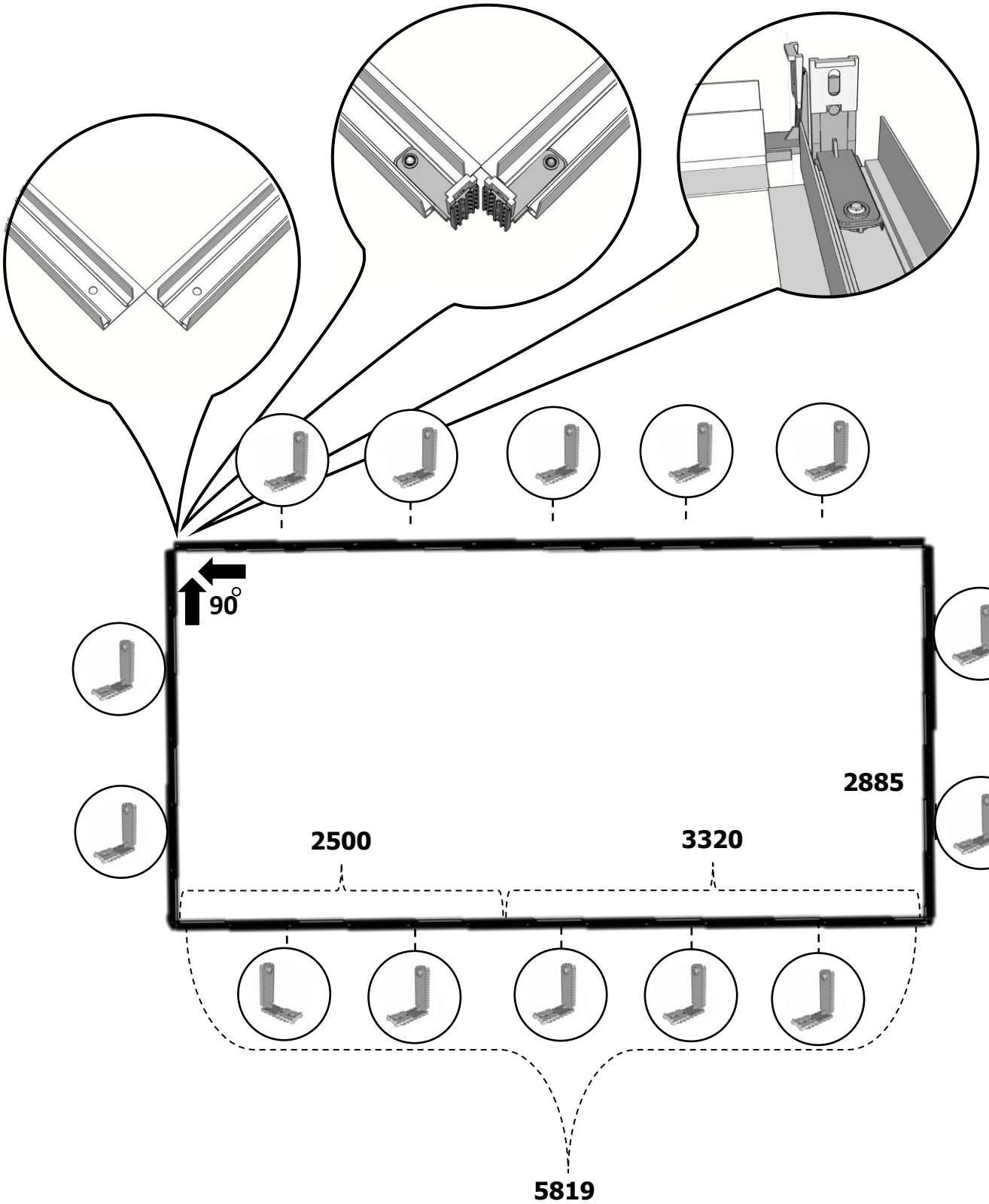

2

C2

	C-90)1(	X36		C-90	X36
	AH-927	X18			

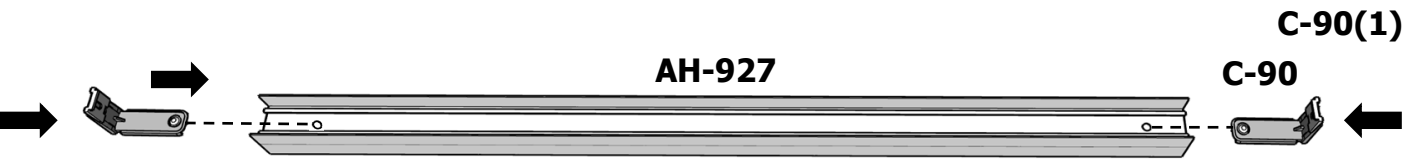

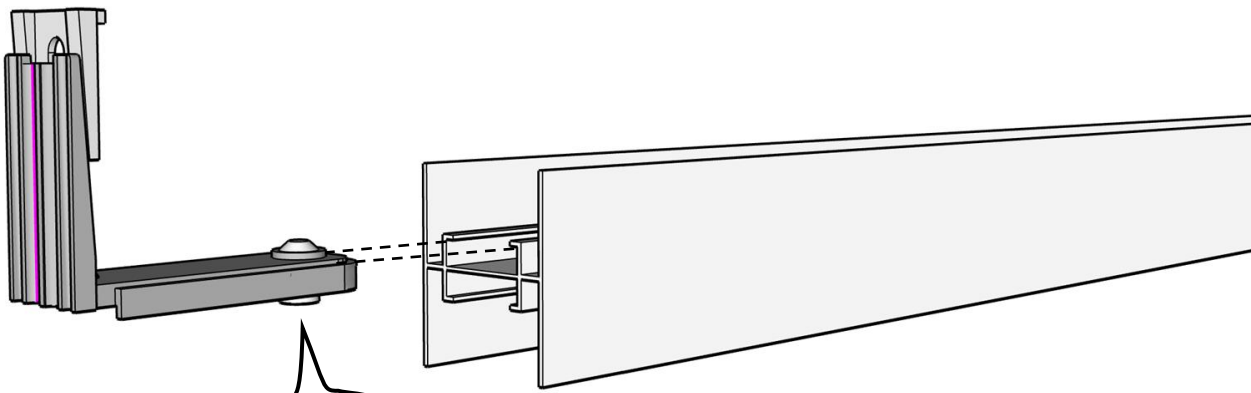

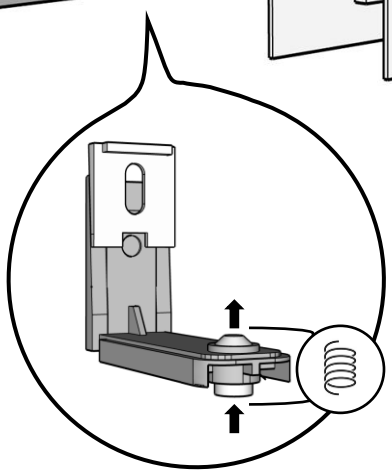

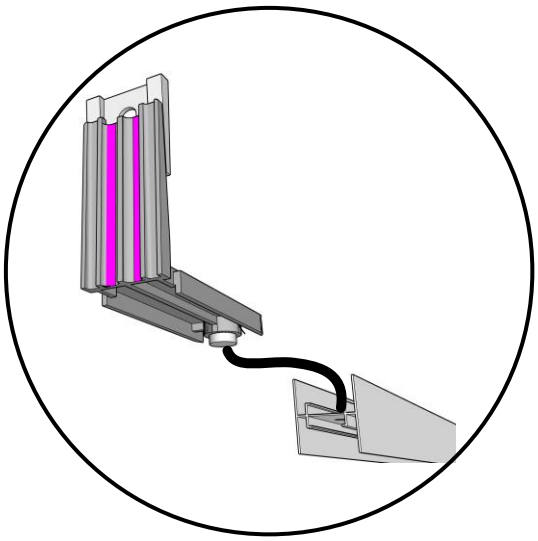

X18



3

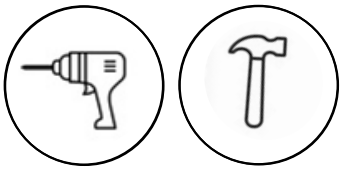

C3

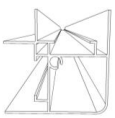	AL-2249	X2		AL-2095	X2	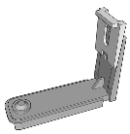	C-90	X8		D12X4B	X8

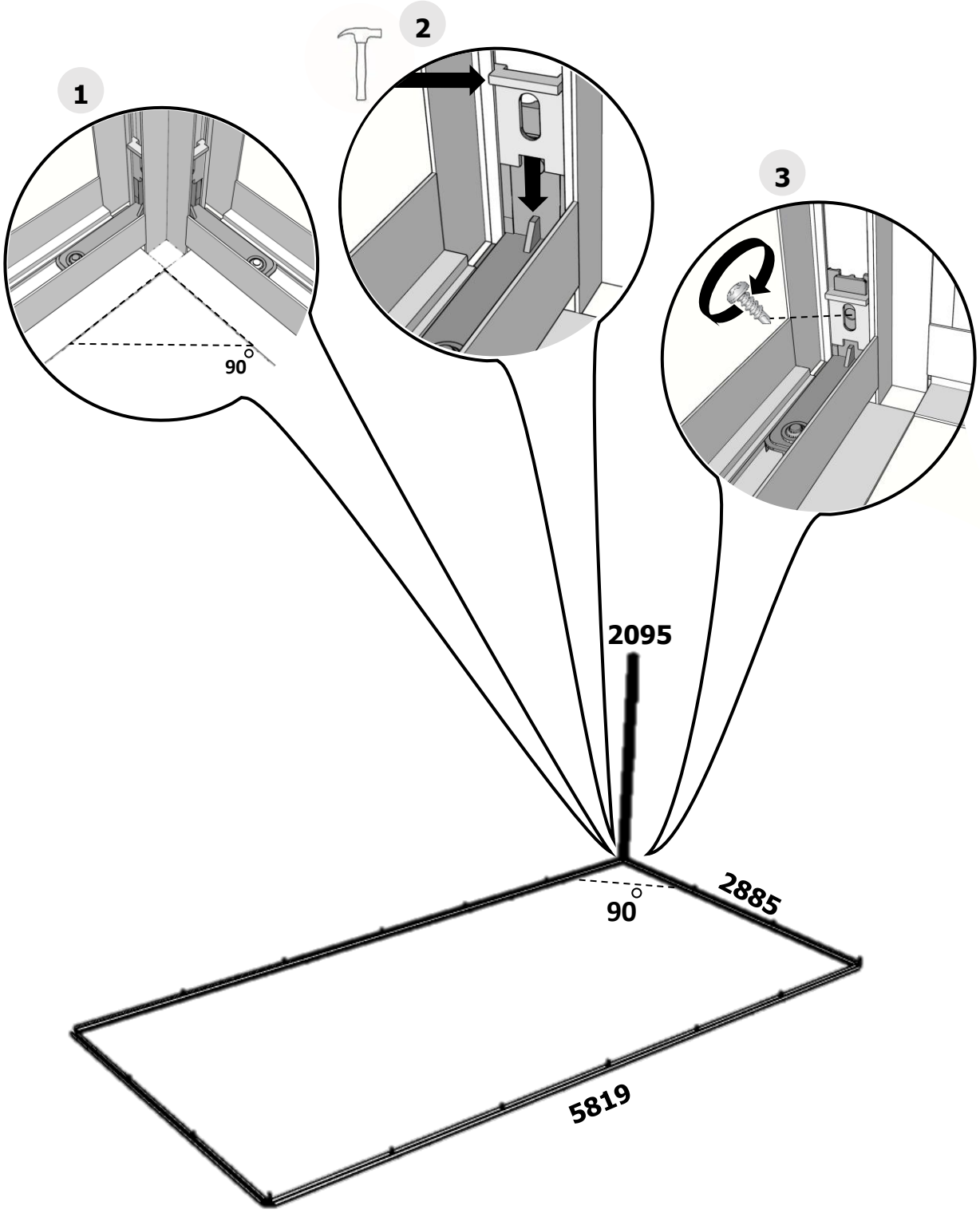

4

C4

AH-2095	X2	AH-2109	X2	AH-2160	X2	AH-2249	X2	AH-2212	X5	AH-2058	X5

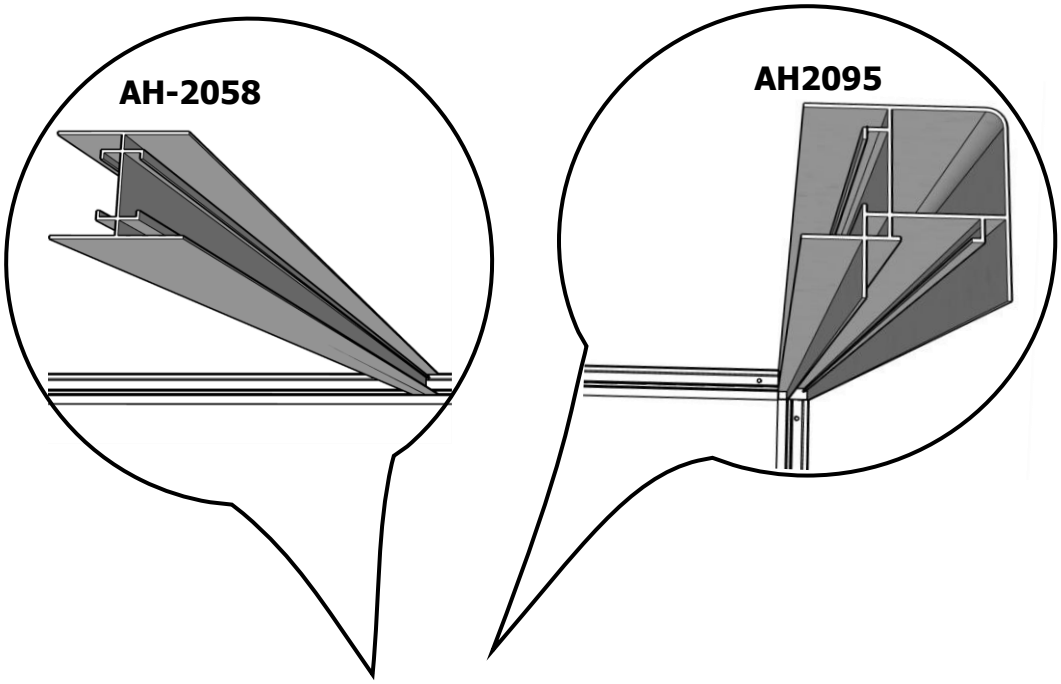

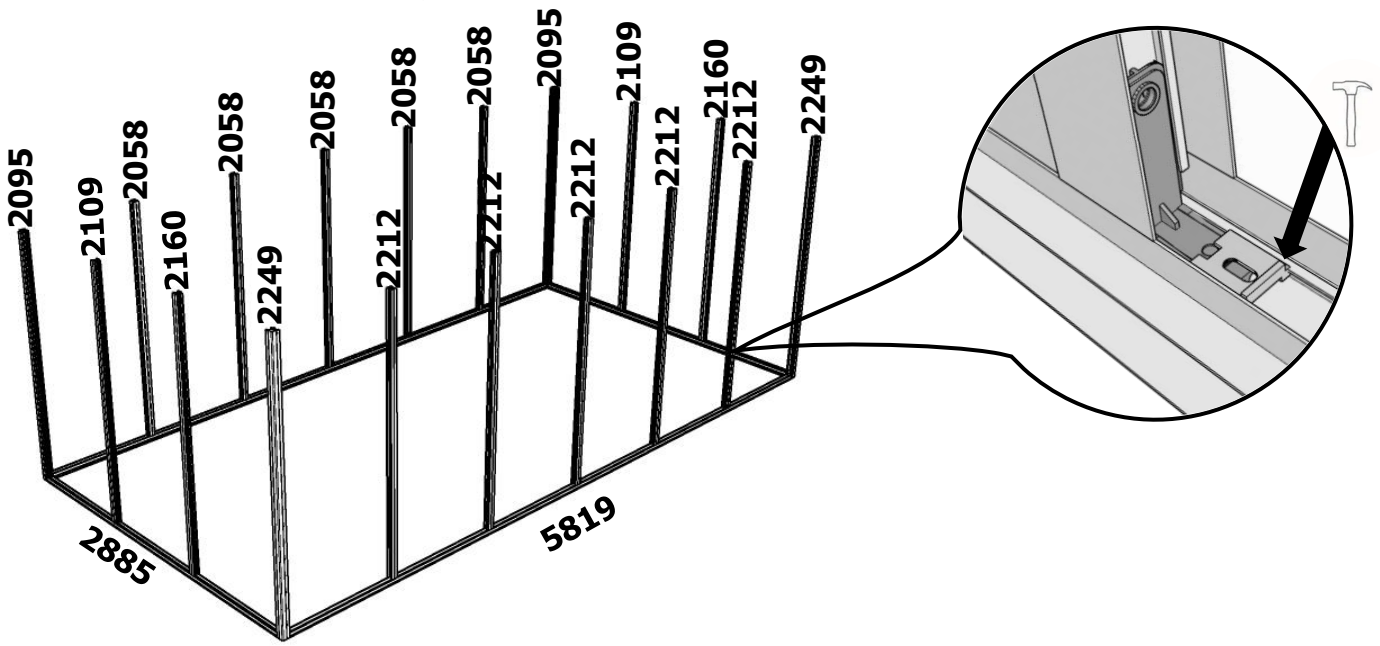

5

C5

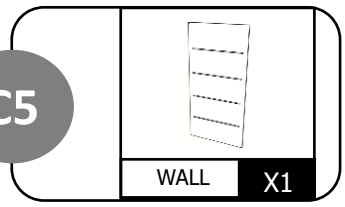

1

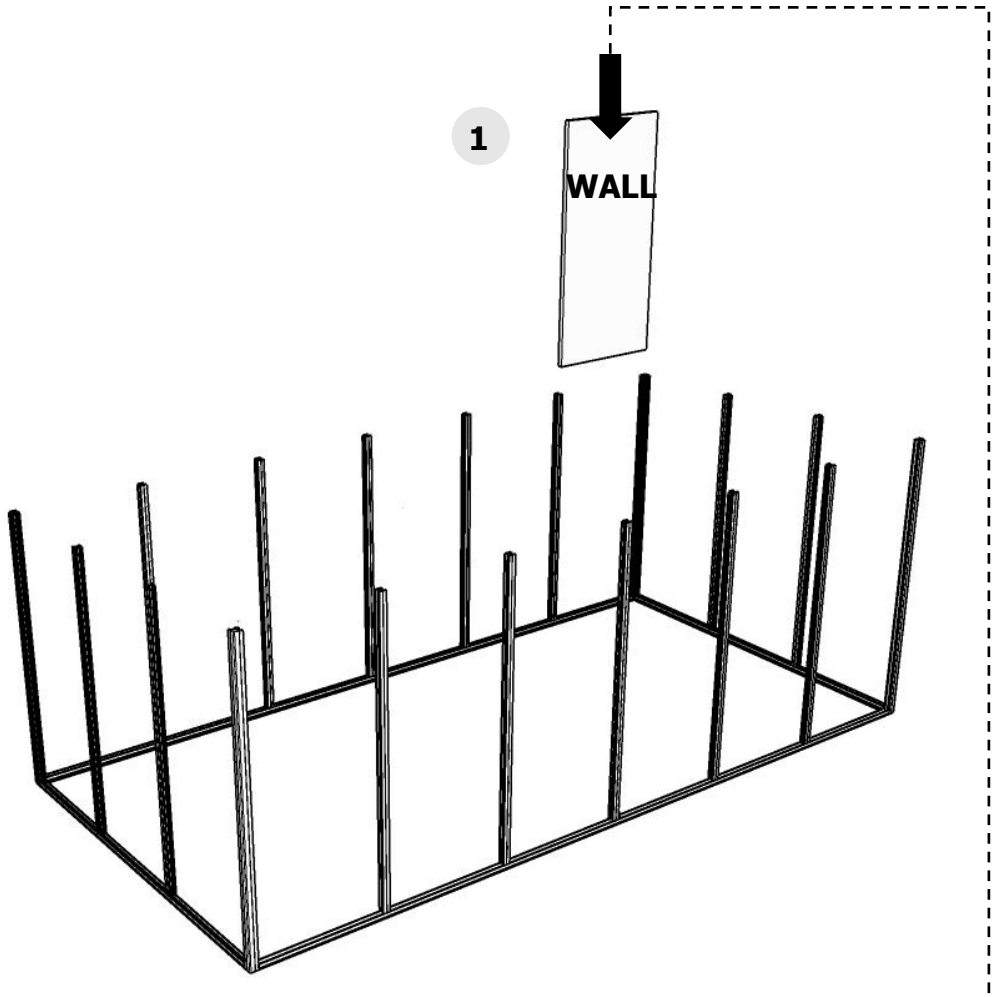

AH-2058

AL-2095

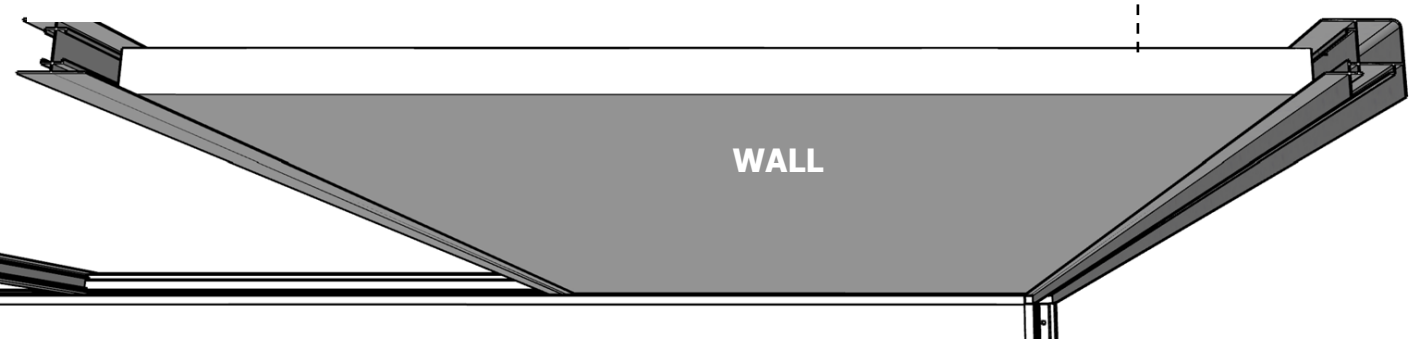

6



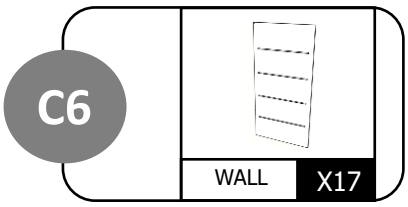
C6
WALL
X17

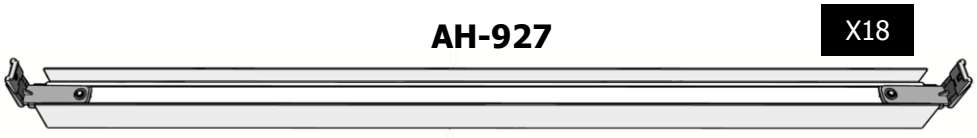
AH-927
X18

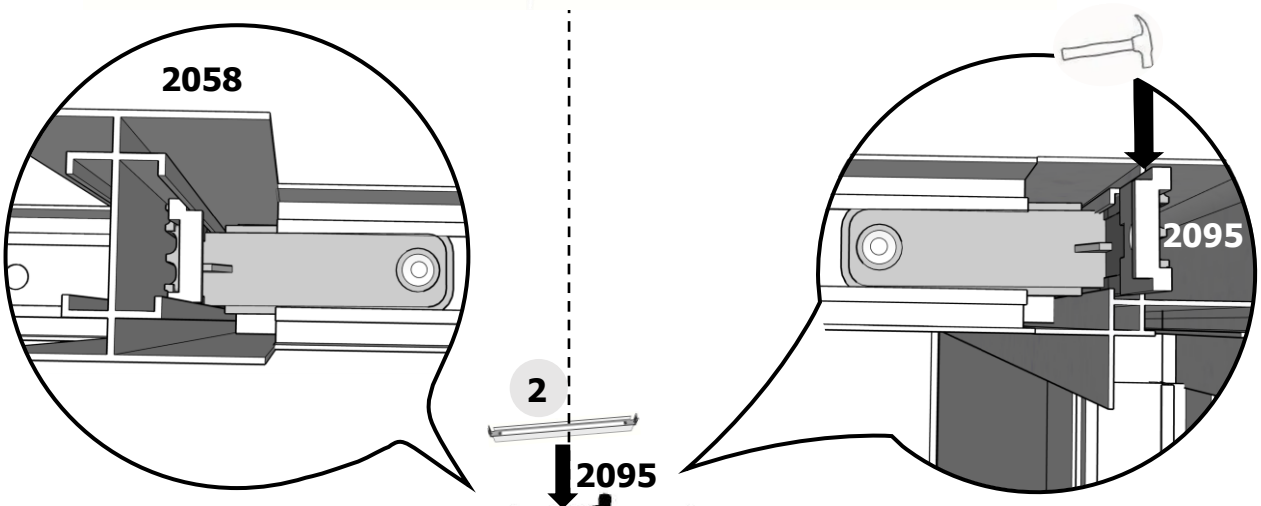
2058
2095
2
2095

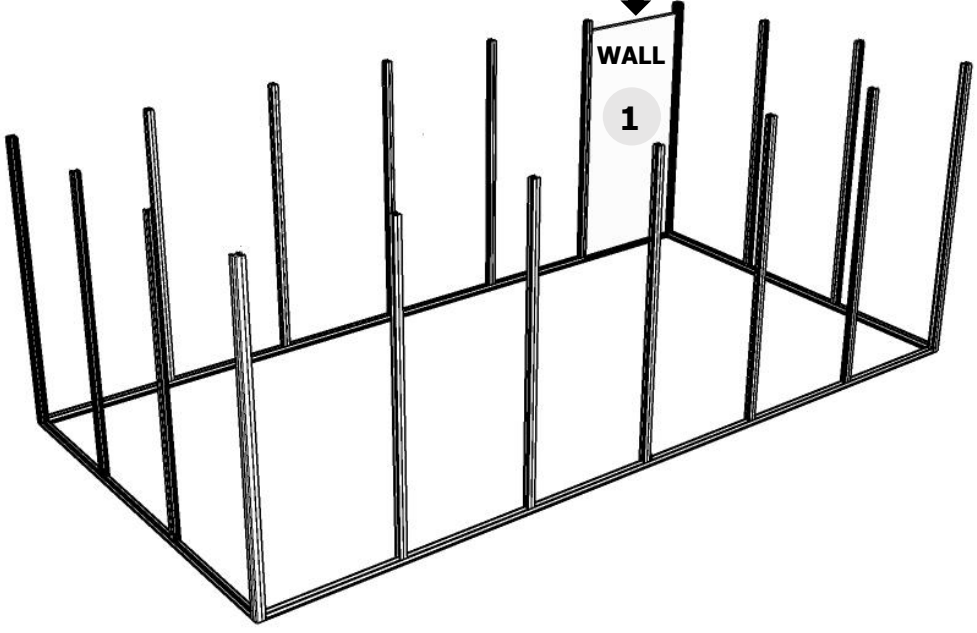
WALL
1


AH-2058
AH-927
AL-2095

7



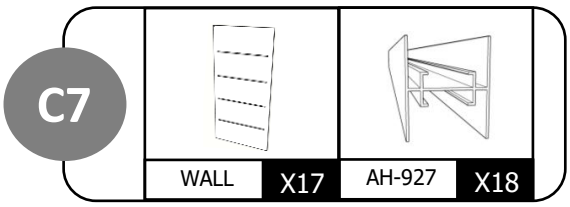
C7
WALL
X17
AH-927
X18

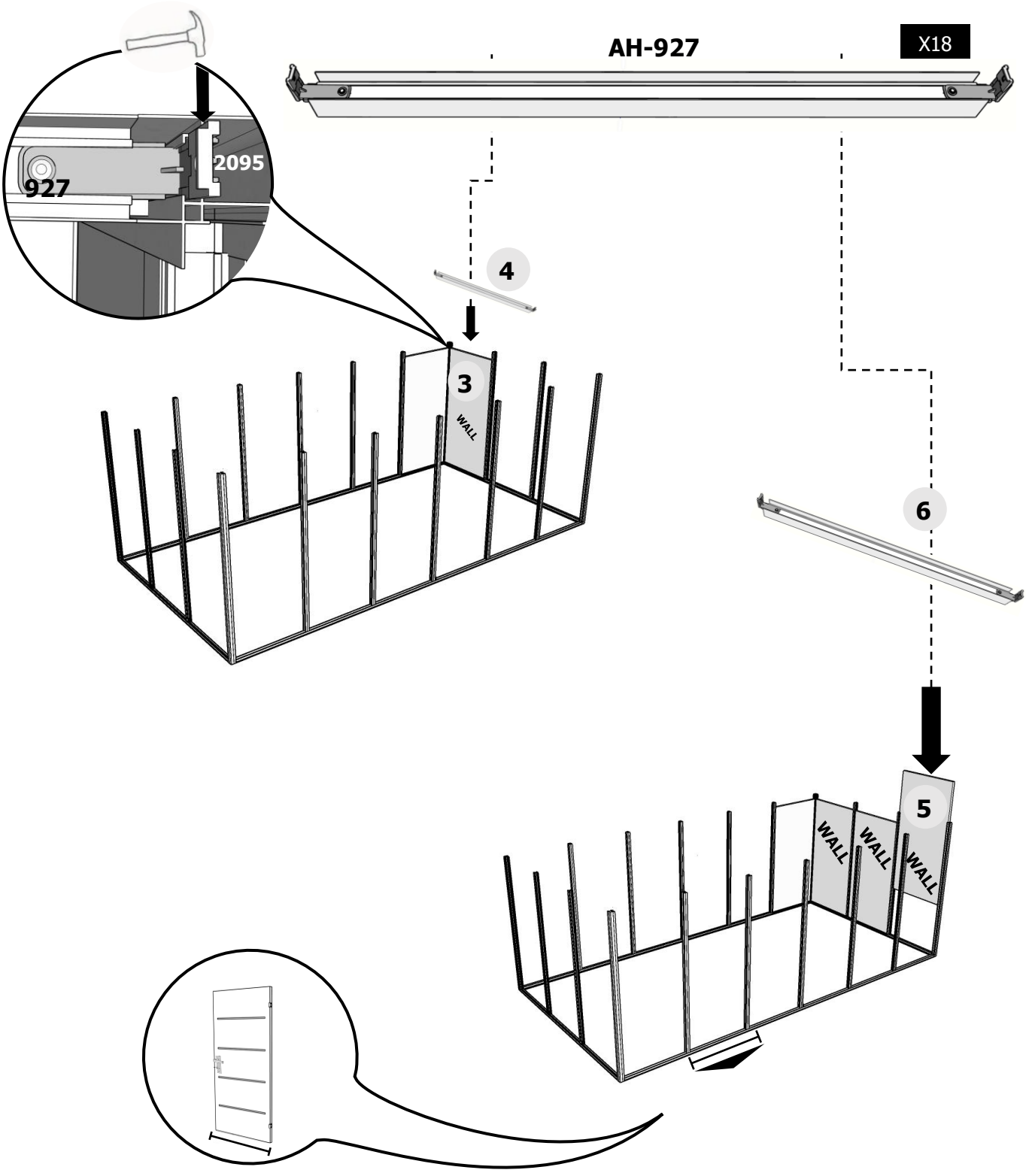
AH-927
X18
2095
927
4
3
WALL
6
5
WALL
WALL
WALL

8

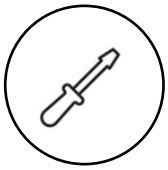

C8

DF	X2	AD-1974-R	X1	AD-1974-L	X1	AD-960-T	X1

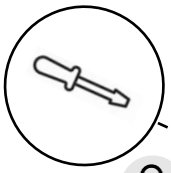

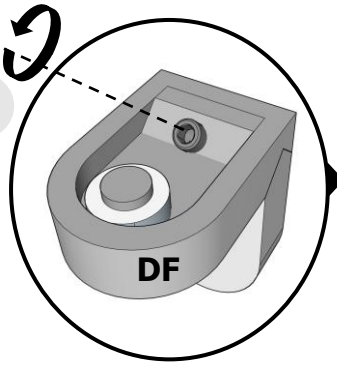

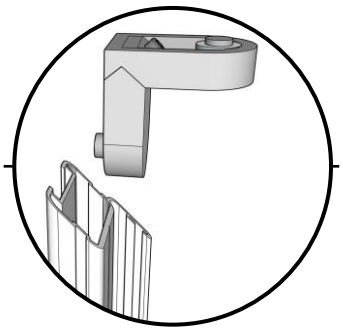

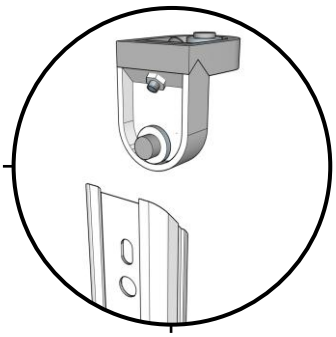

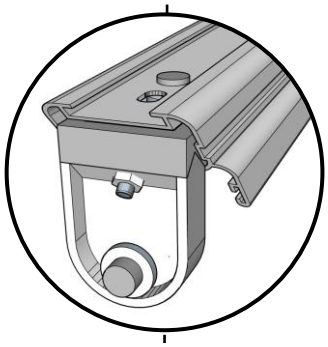

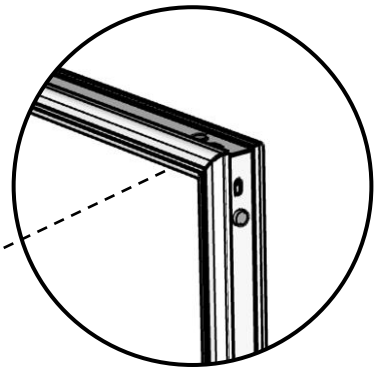

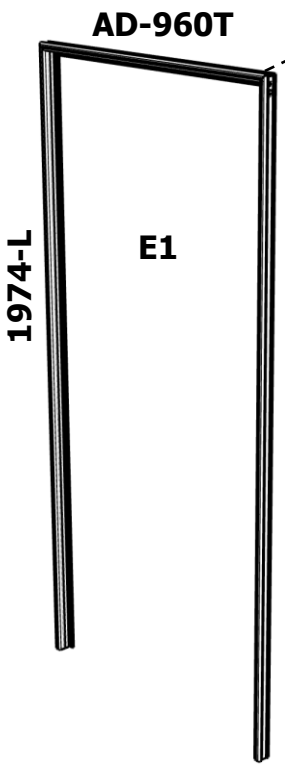

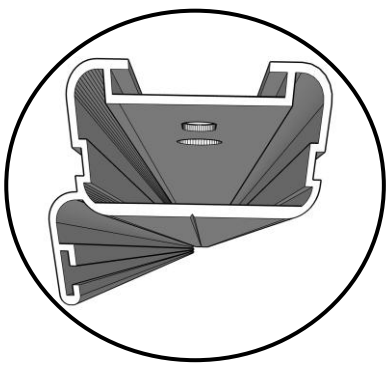

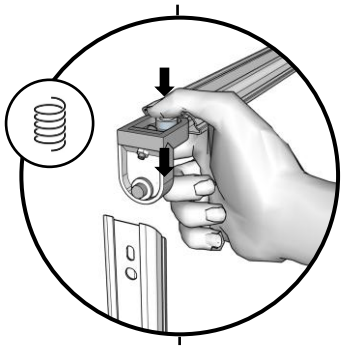

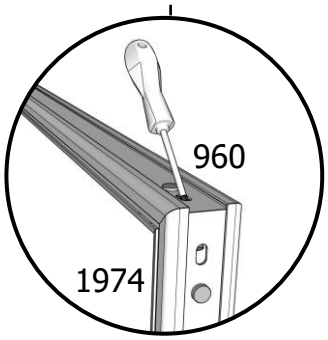

9



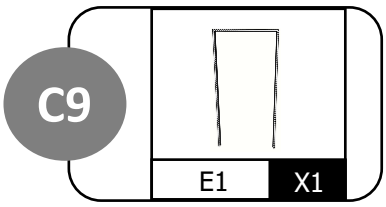
C9
E1
X1

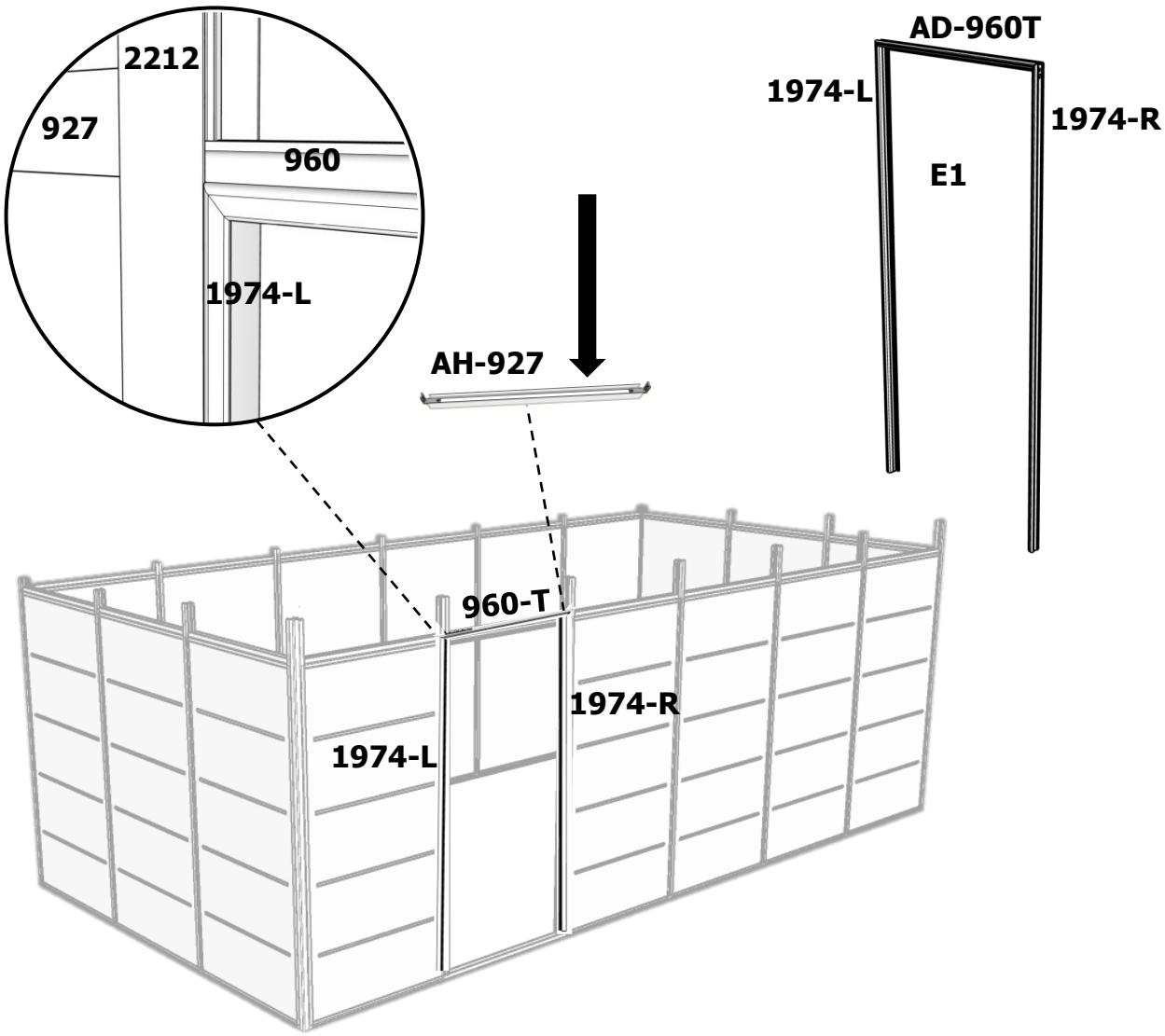
2212
927
960
1974-L
AH-927
AD-960T
1974-L
1974-R
E1
960-T
1974-R
1974-L

10

C10

RAMP	X1	AD-917-F	X1

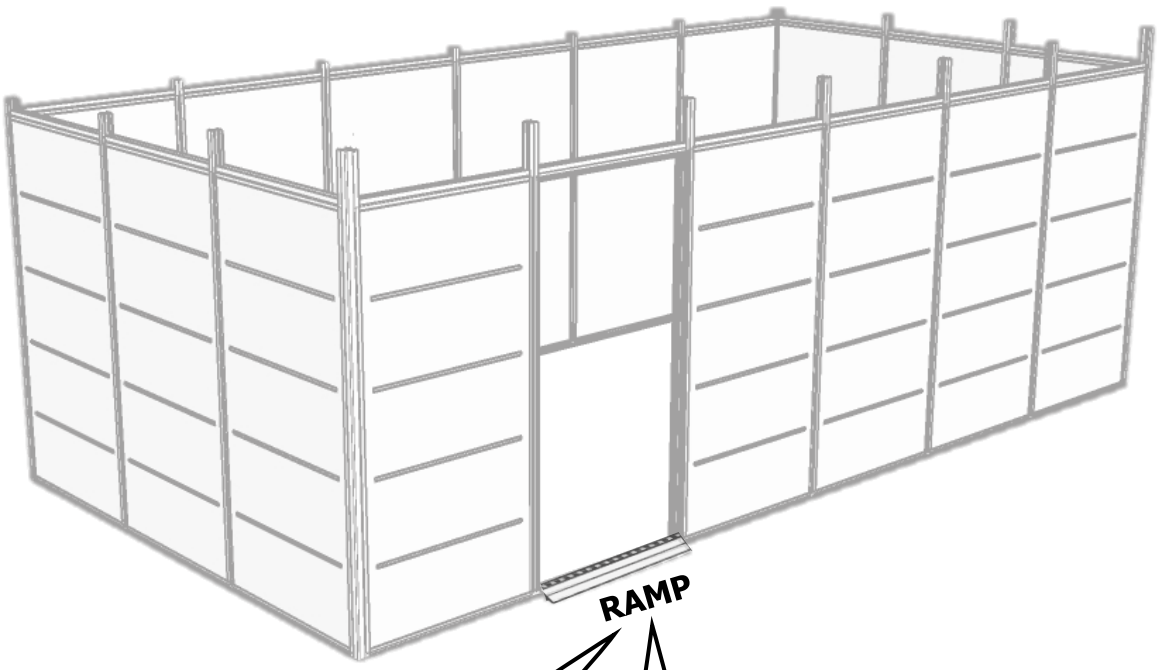

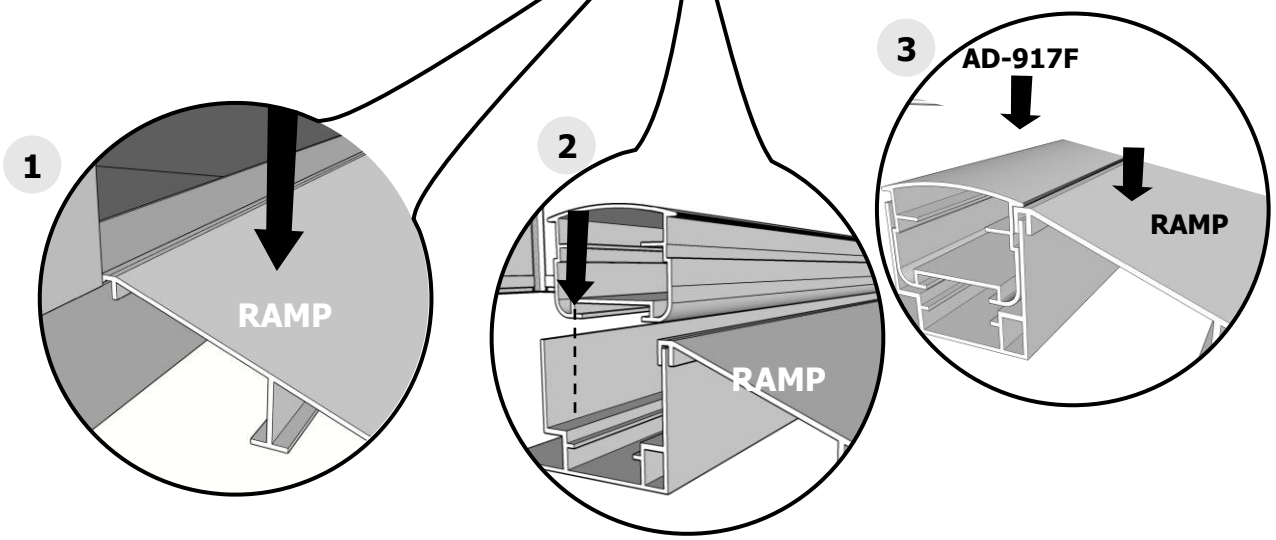

11



C11

HG-D	X2	HG-UP	X2	E1	X1	DOOR	X1	35X3.5	X8	D45X3.5	X8

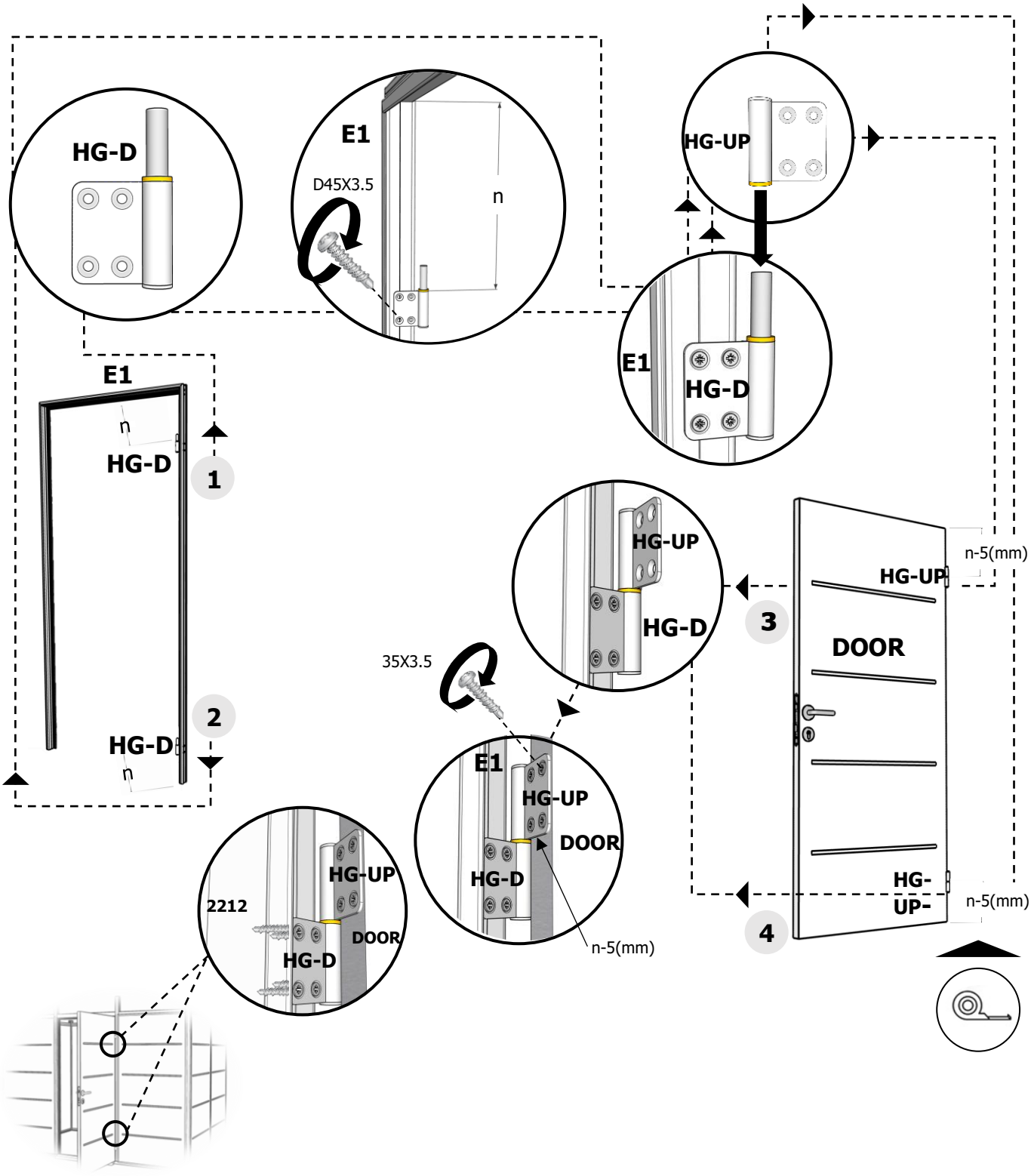

12

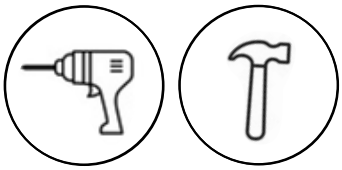

C12

19X3	X10	35X3.5	X2	N4	X2	N1	X1	N2	X1	N3	X1

N5	X1

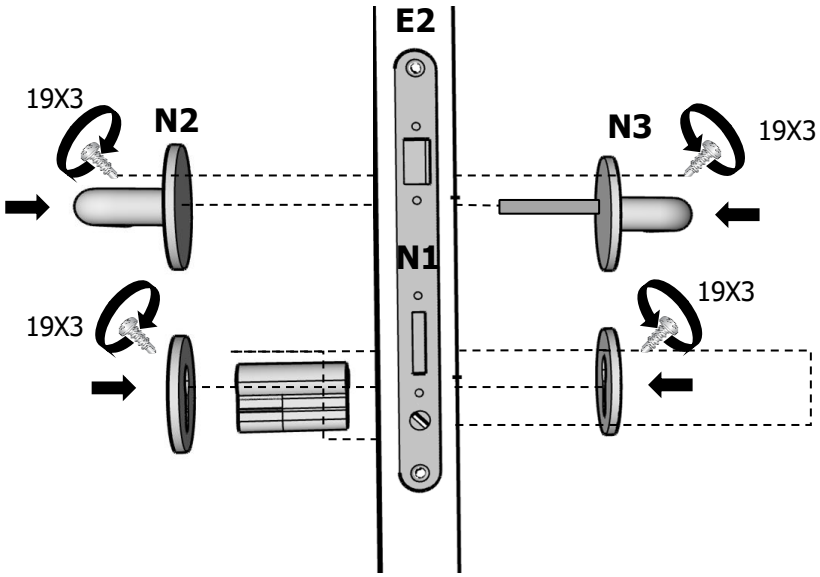

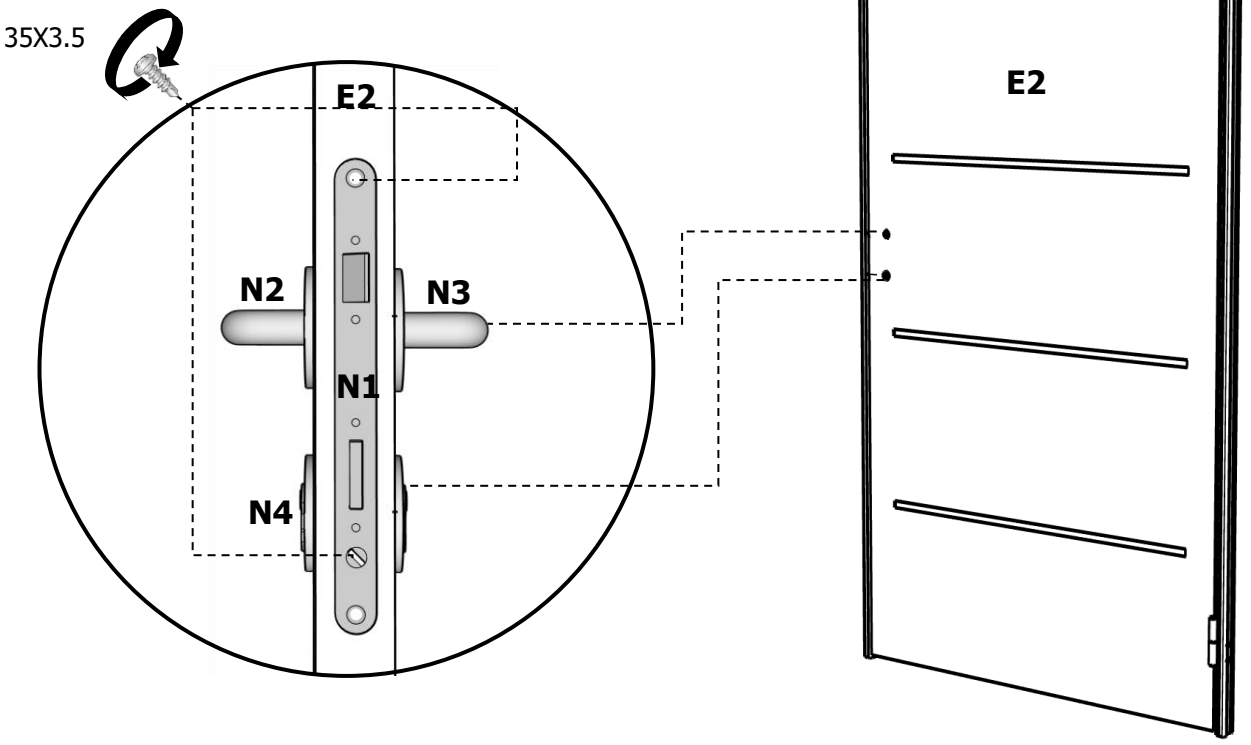

13



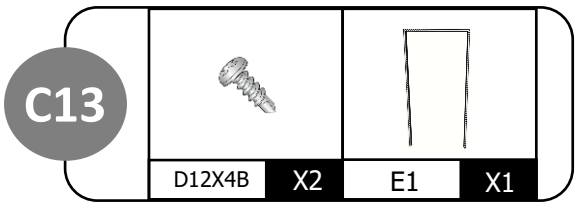
C13
D12X4B
X2
E1
X1

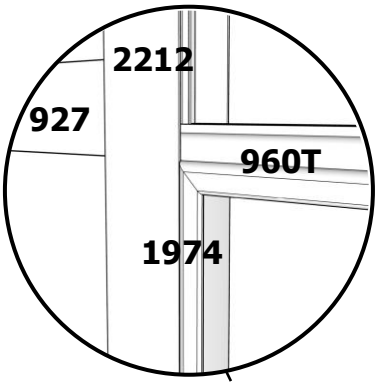
2212
927
960T
1974

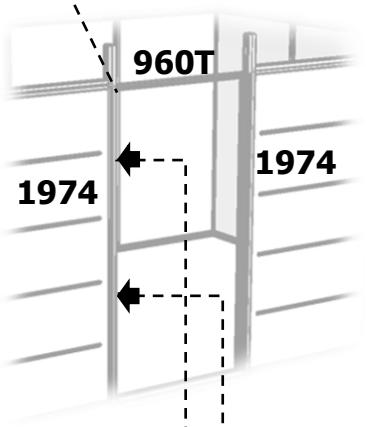
960T
1974
1974

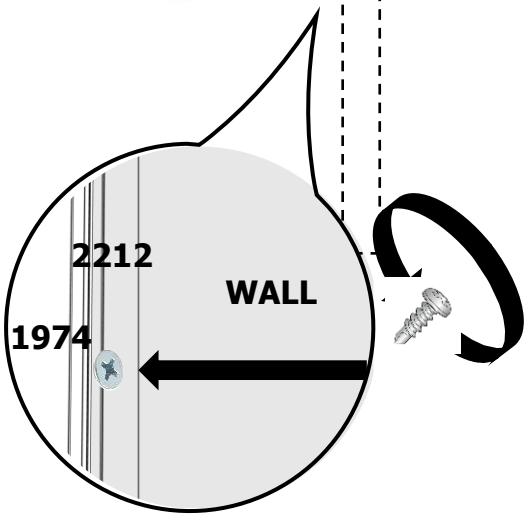
2212
WALL
1974

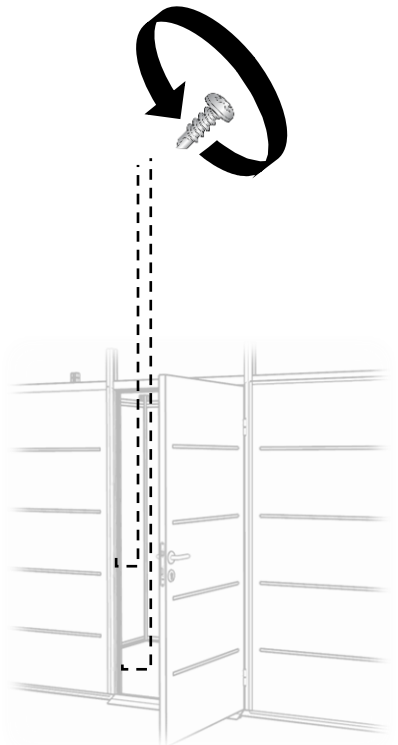

14

C14

G-17-23	X2	G-12-17	X2	G-7-12	X2	G-97/7	X6	G-97/23	X6

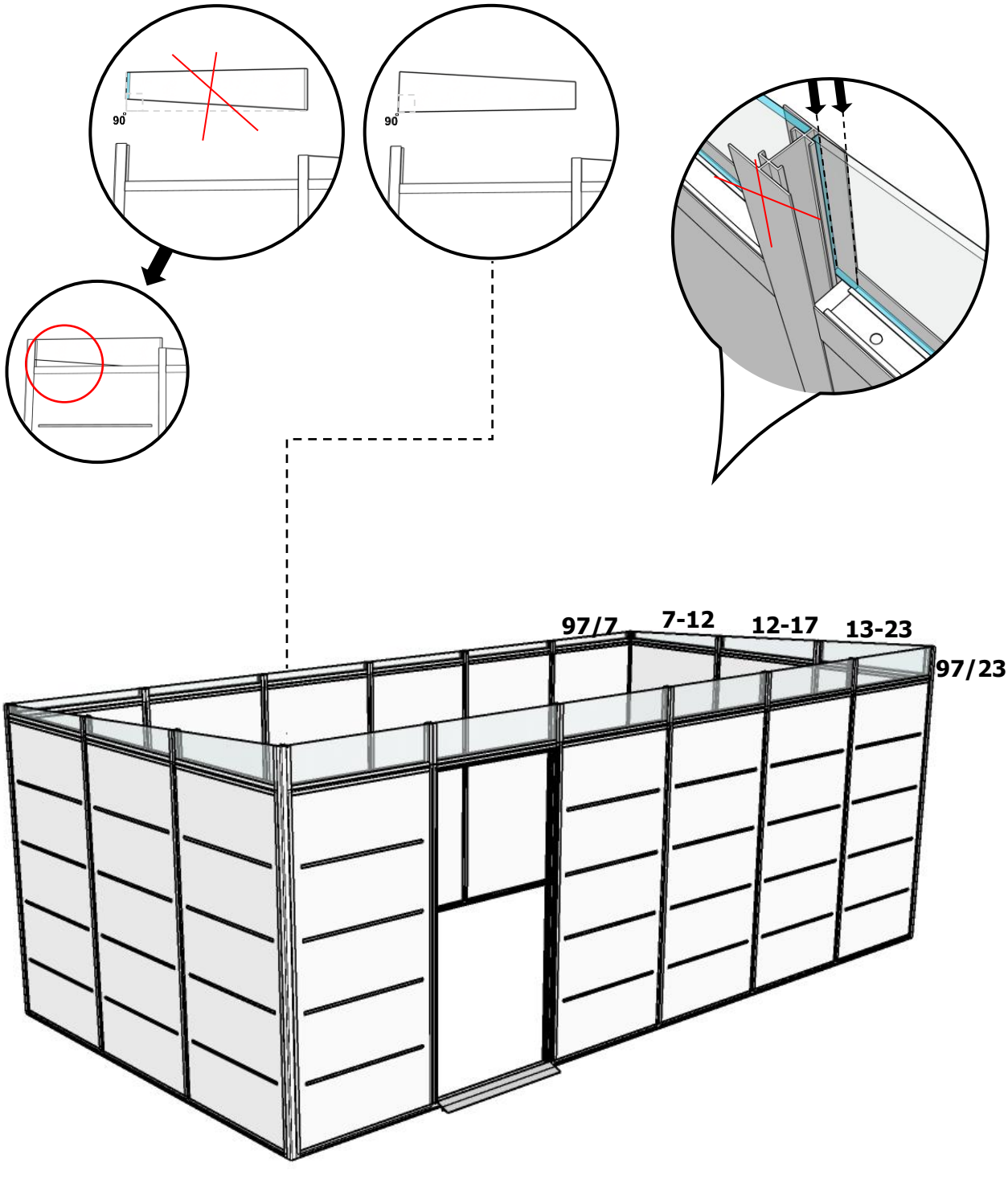

15

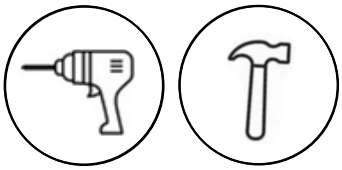

C15

D12X4B	X8	IS	X2	C-RF	X2	AR-5942	X2	AR-3008	X1

1

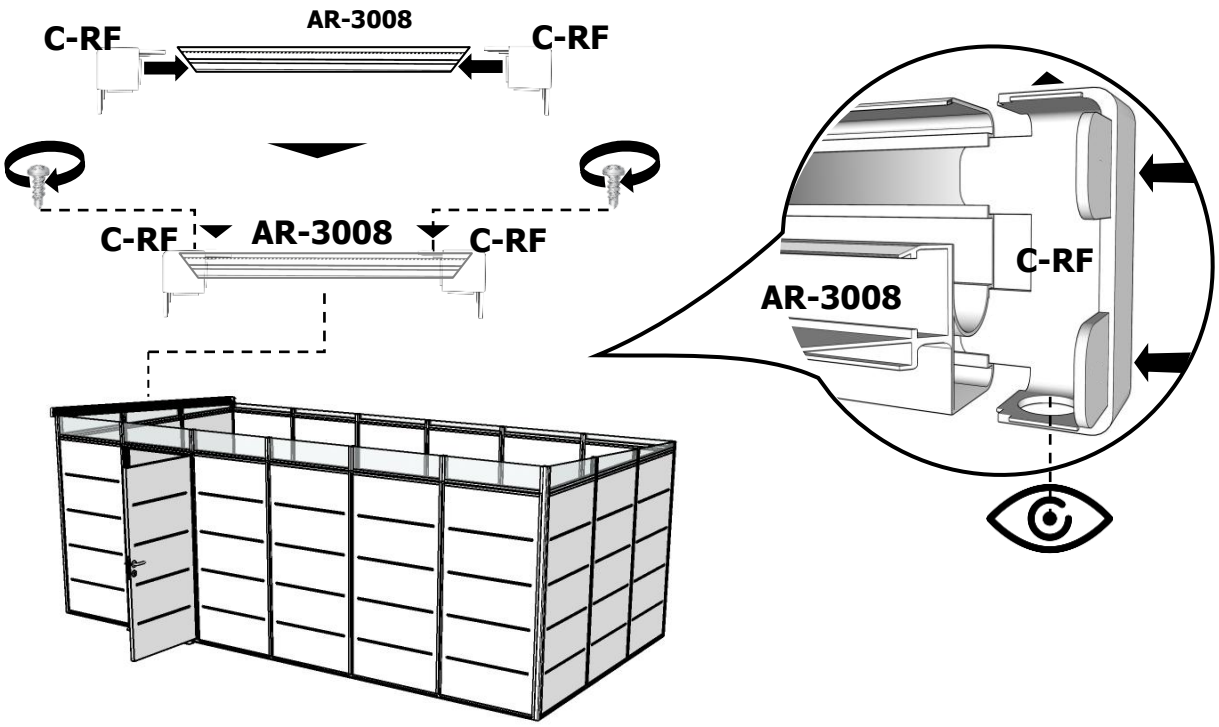

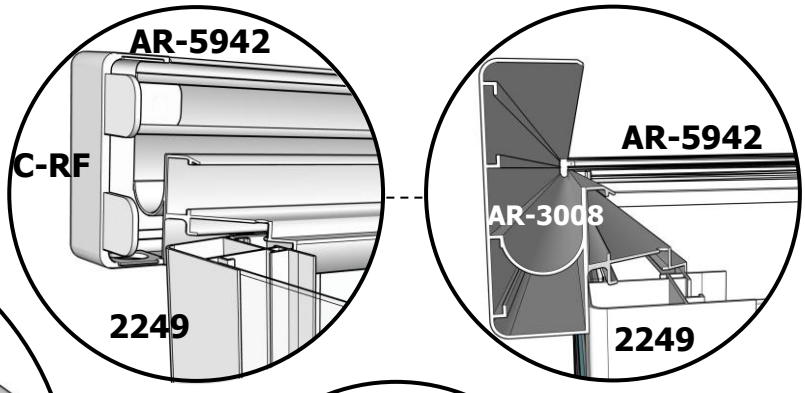

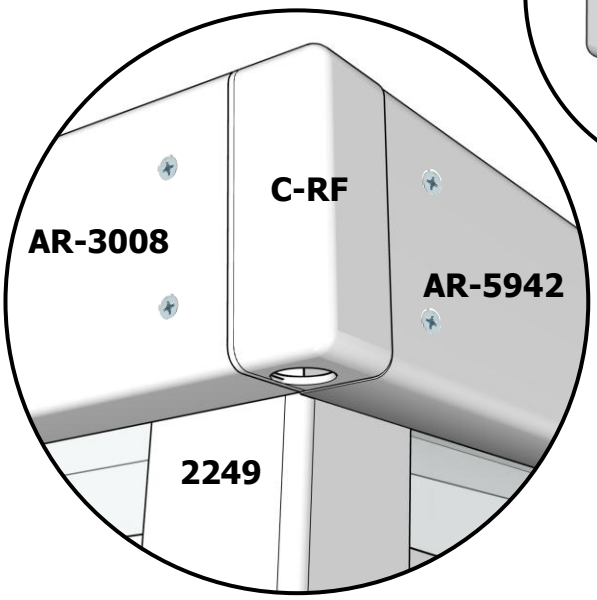

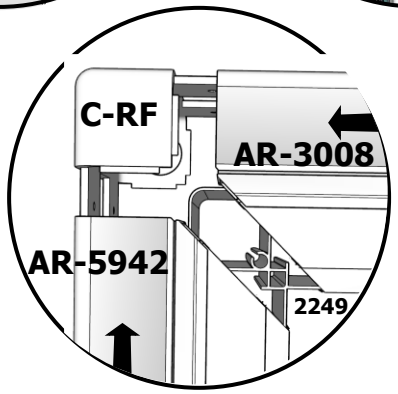

16

C16

AR-2971	X4	AR-3008	X1	IS	X2

AR-2971+AR-2971

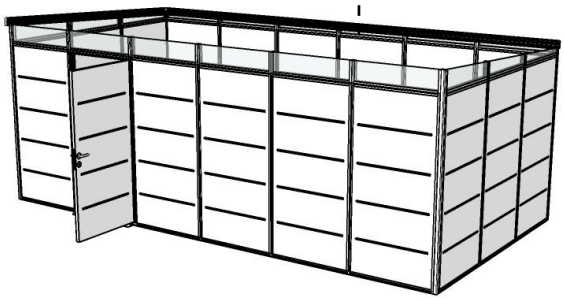

AR-2971+AR-2971

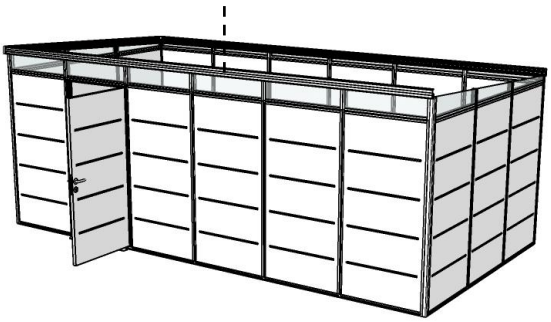

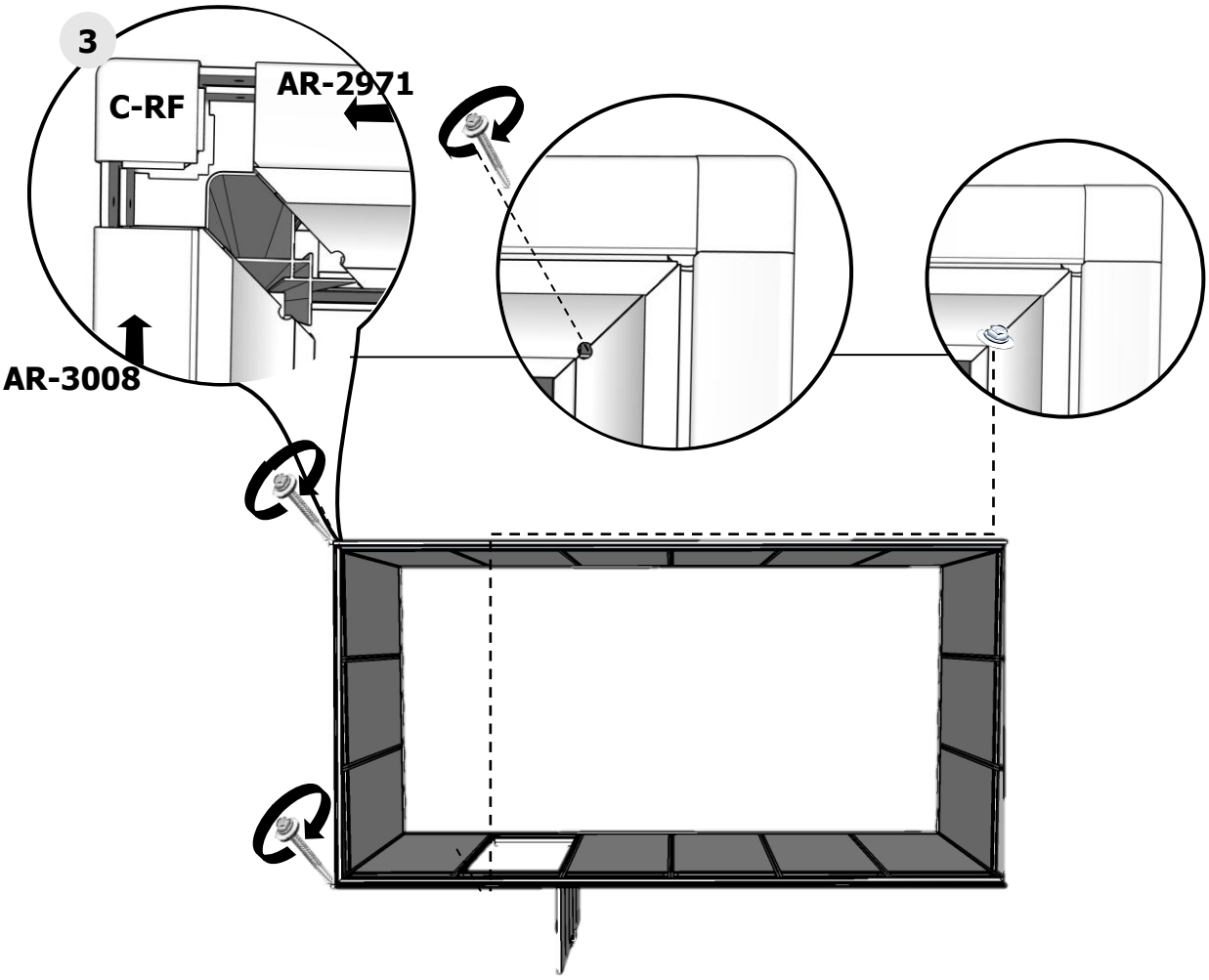

17

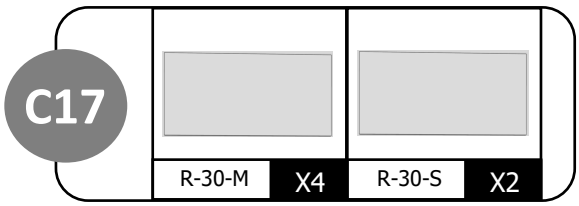
C17
R-30-M
X4
R-30-S
X2

4

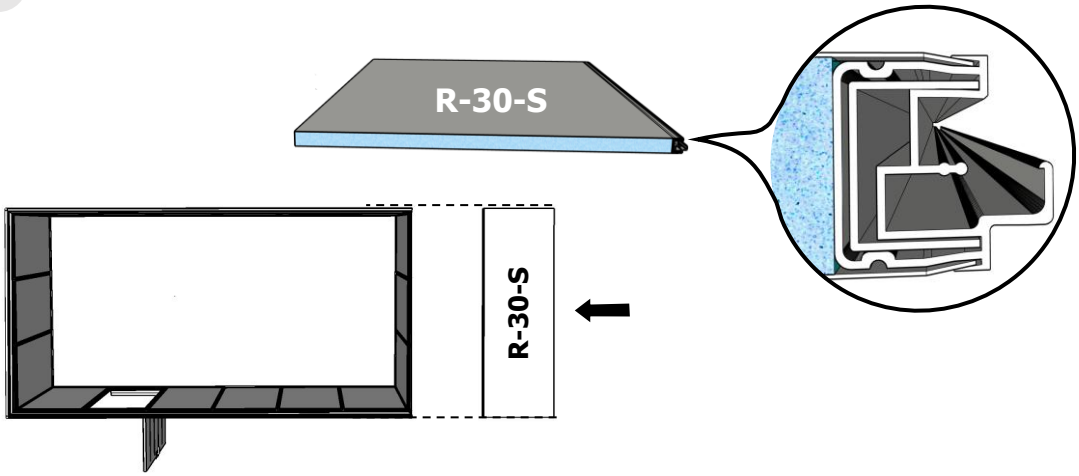
R-30-S
R-30-S

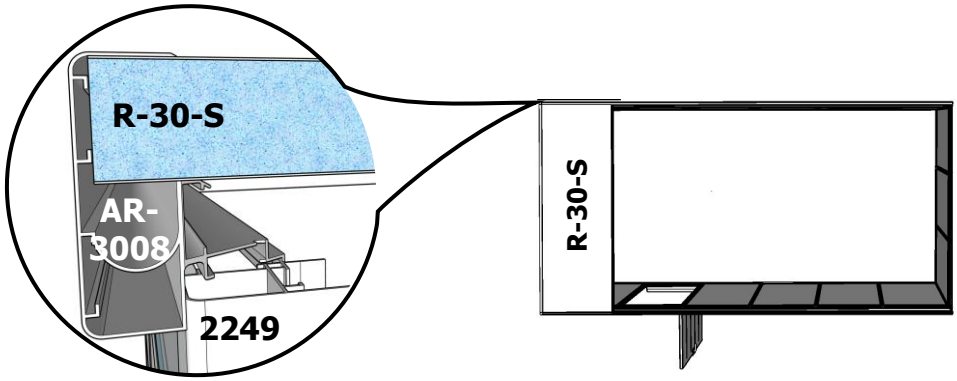
R-30-S
AR-
3008
2249
R-30-S

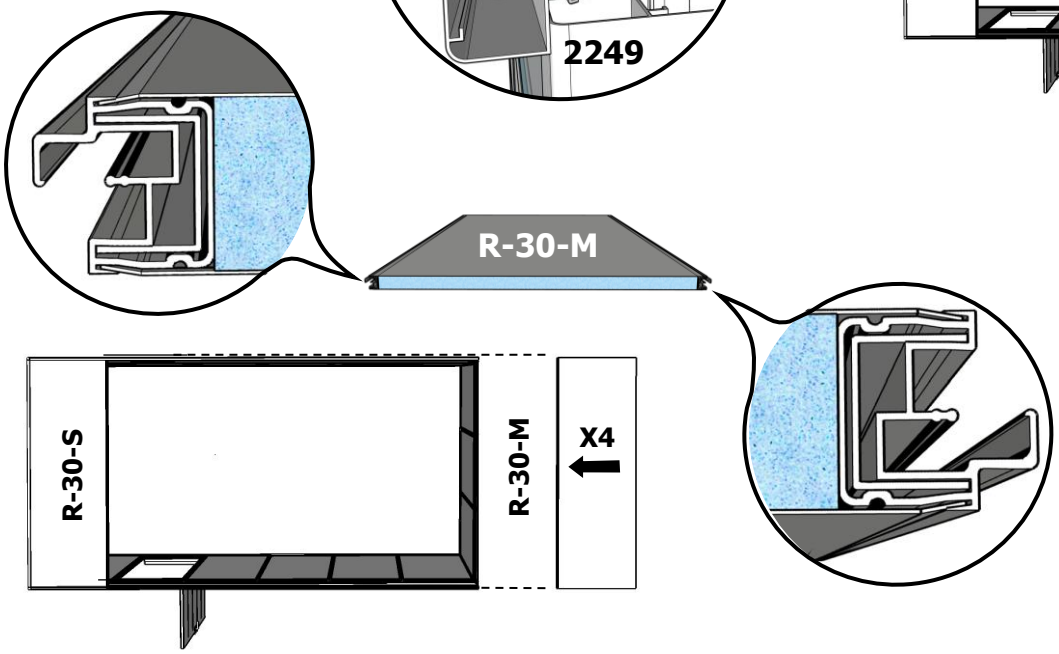
R-30-M
R-30-S
R-30-M
X4

18

C18

D20X4B	X4	D12X4B	X4	C-RF	X2	AR-3008	X1	R-30-M	X4	R-30-S	X2

5

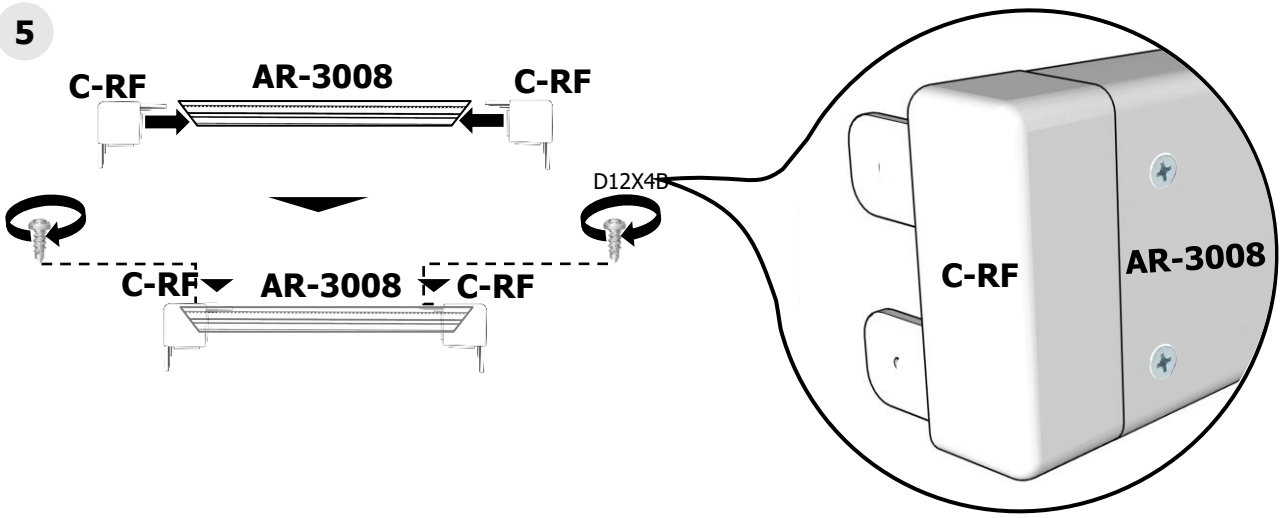

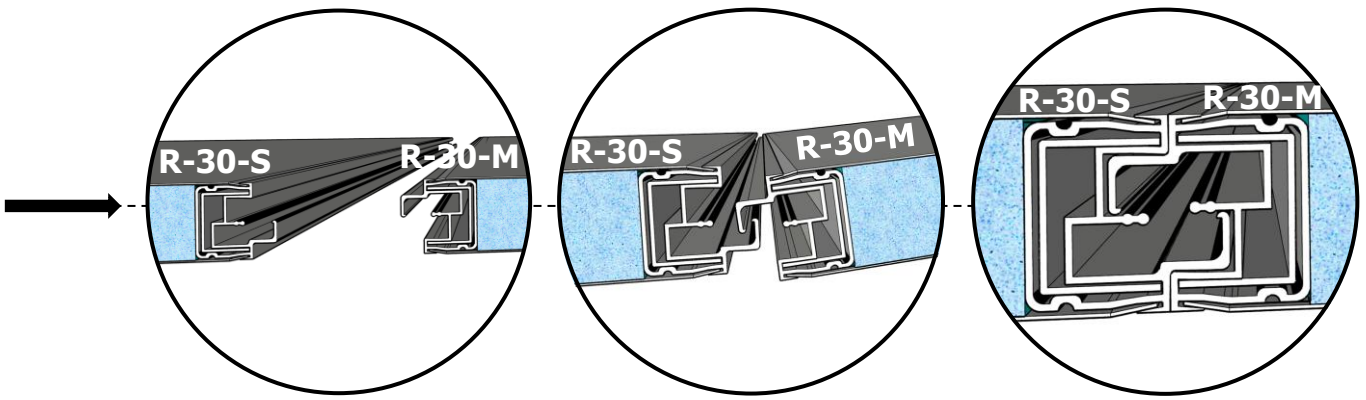

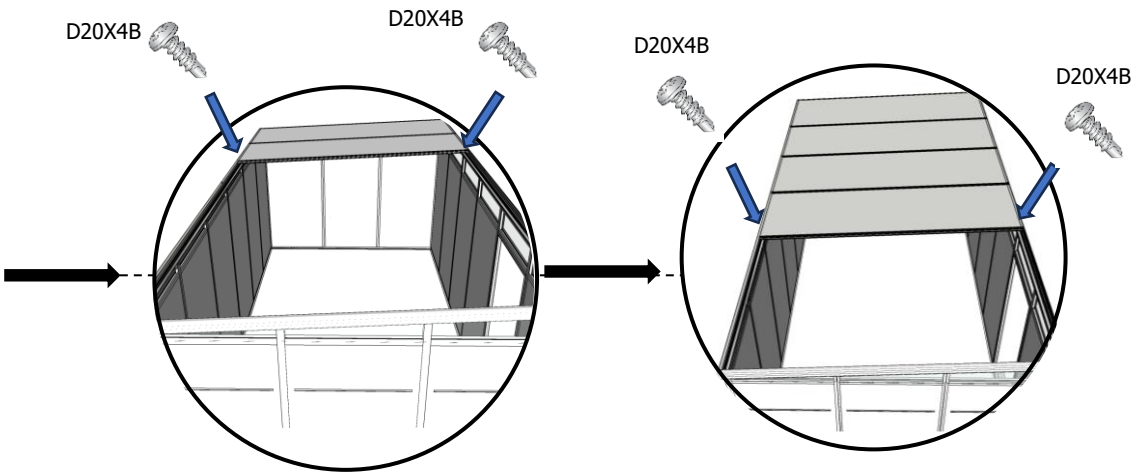

19

C19

D20X4B	x4	D12X4B	X4	C-RF	X2	AR-3008	X1	R-30-M	X4	R-30-S	X2

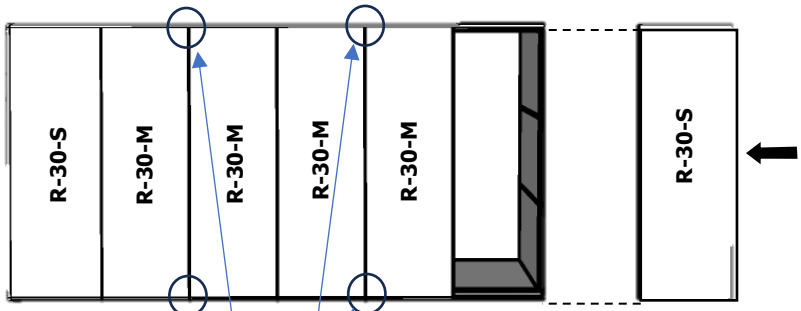



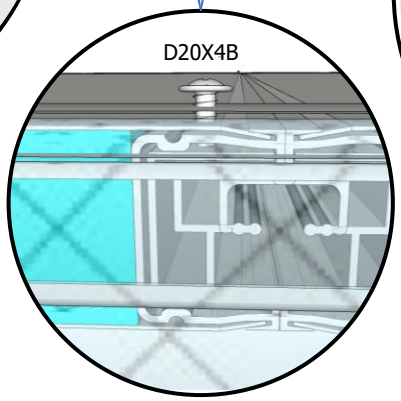

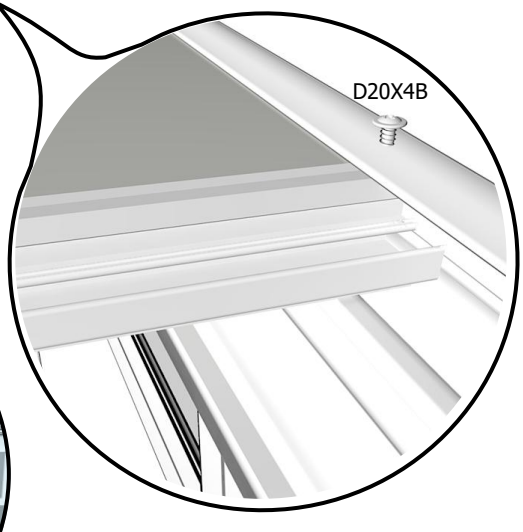

6

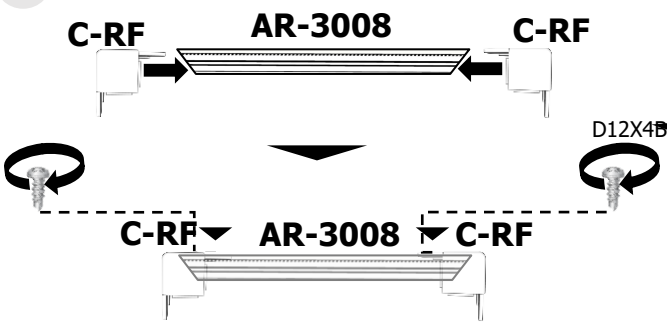

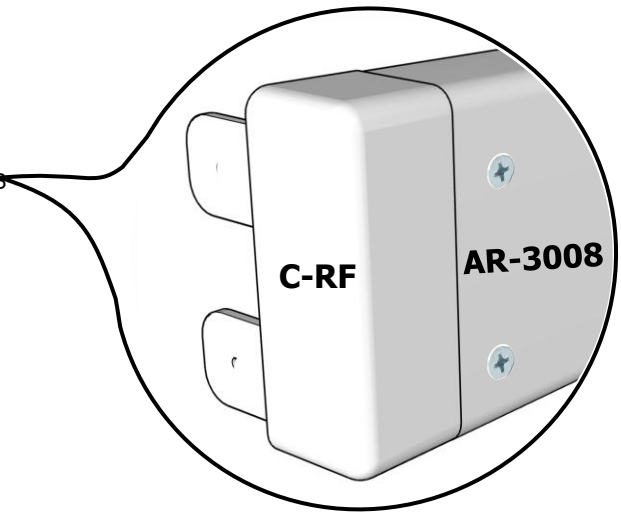

20

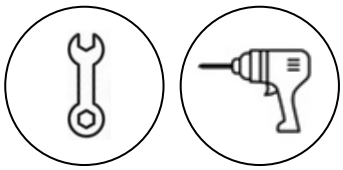

C20

S-H43X6	X2	D12X4B	X4	C-RF	X2	AR-3008	X1

7

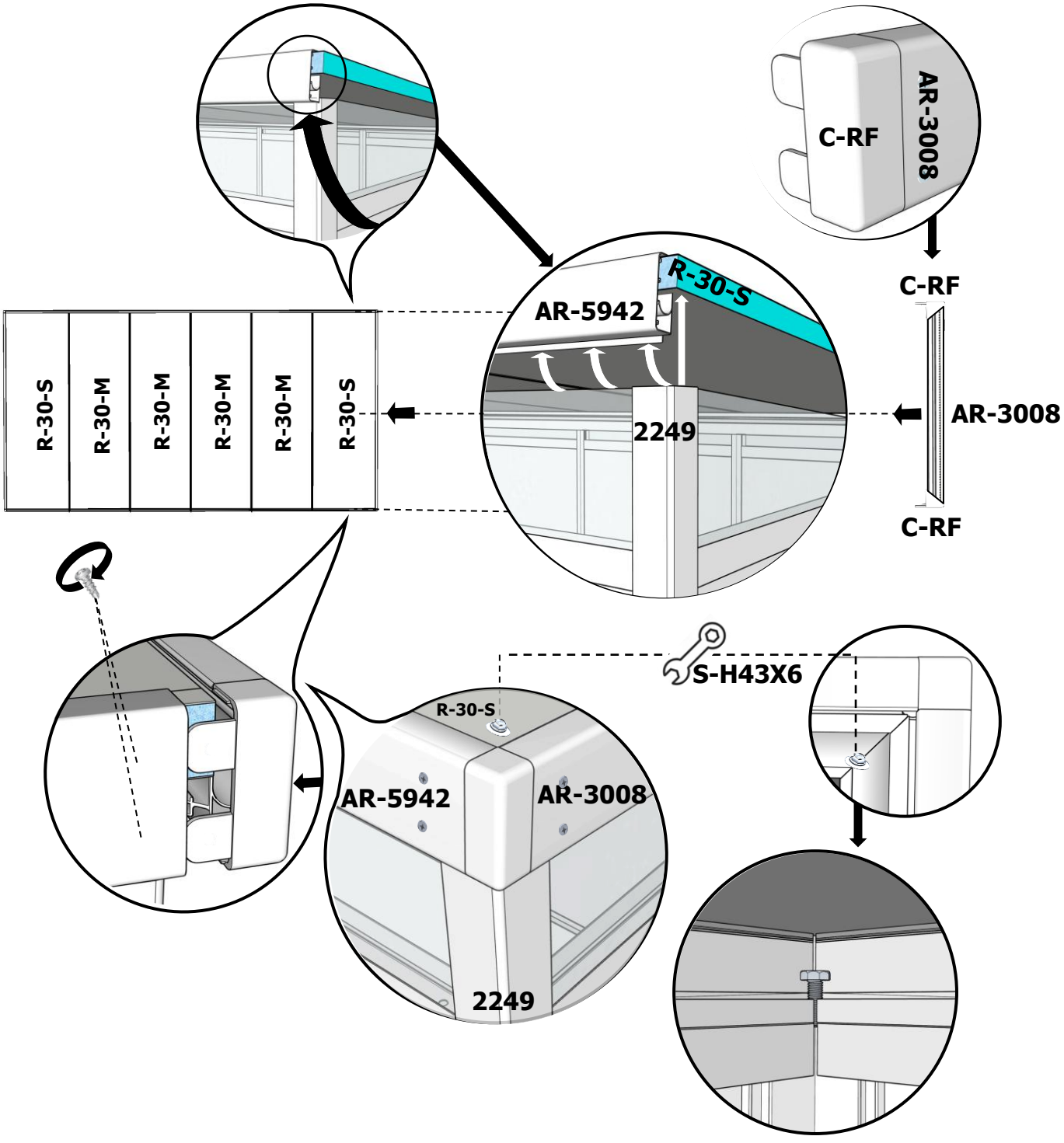

21

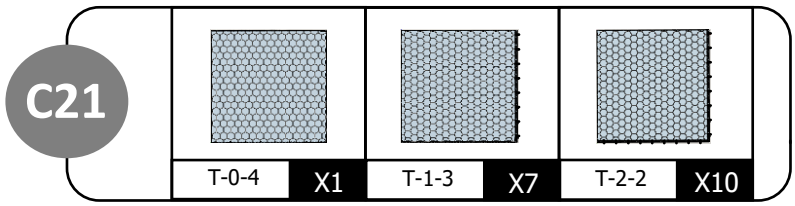
C21
T-0-4
X1
T-1-3
X7
T-2-2
X10

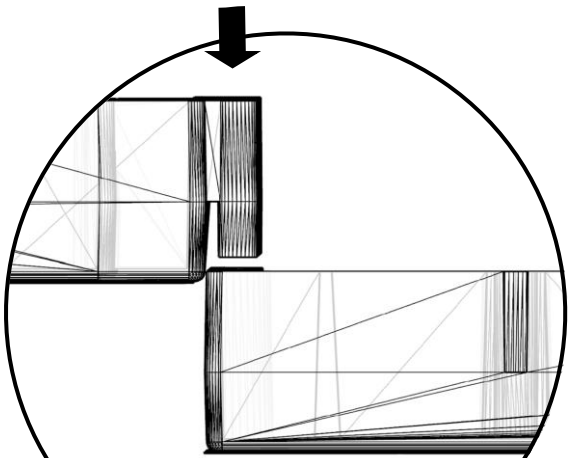

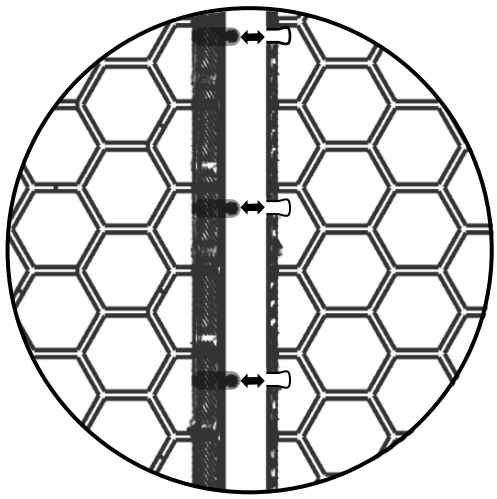

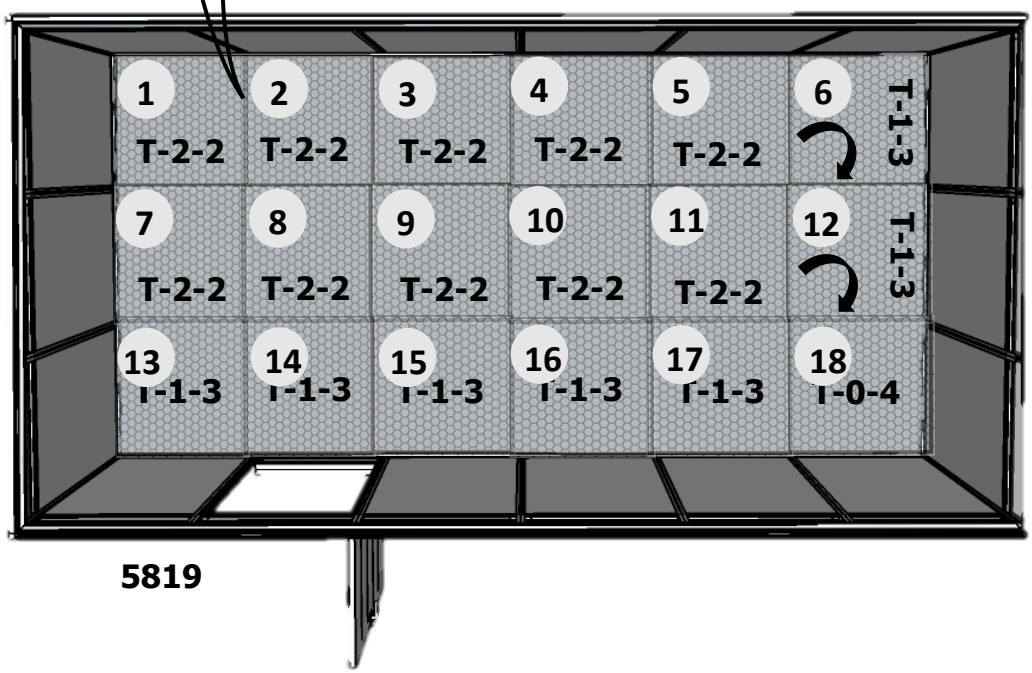
1
T-2-2
2
T-2-2
3
T-2-2
4
T-2-2
5
T-2-2
6
T-1-3
7
T-2-2
8
T-2-2
9
T-2-2
10
T-2-2
11
T-2-2
12
T-1-3
13
T-1-3
14
T-1-3
15
T-1-3
16
T-1-3
17
T-1-3
18
T-0-4
2885
5819

EVERBOX

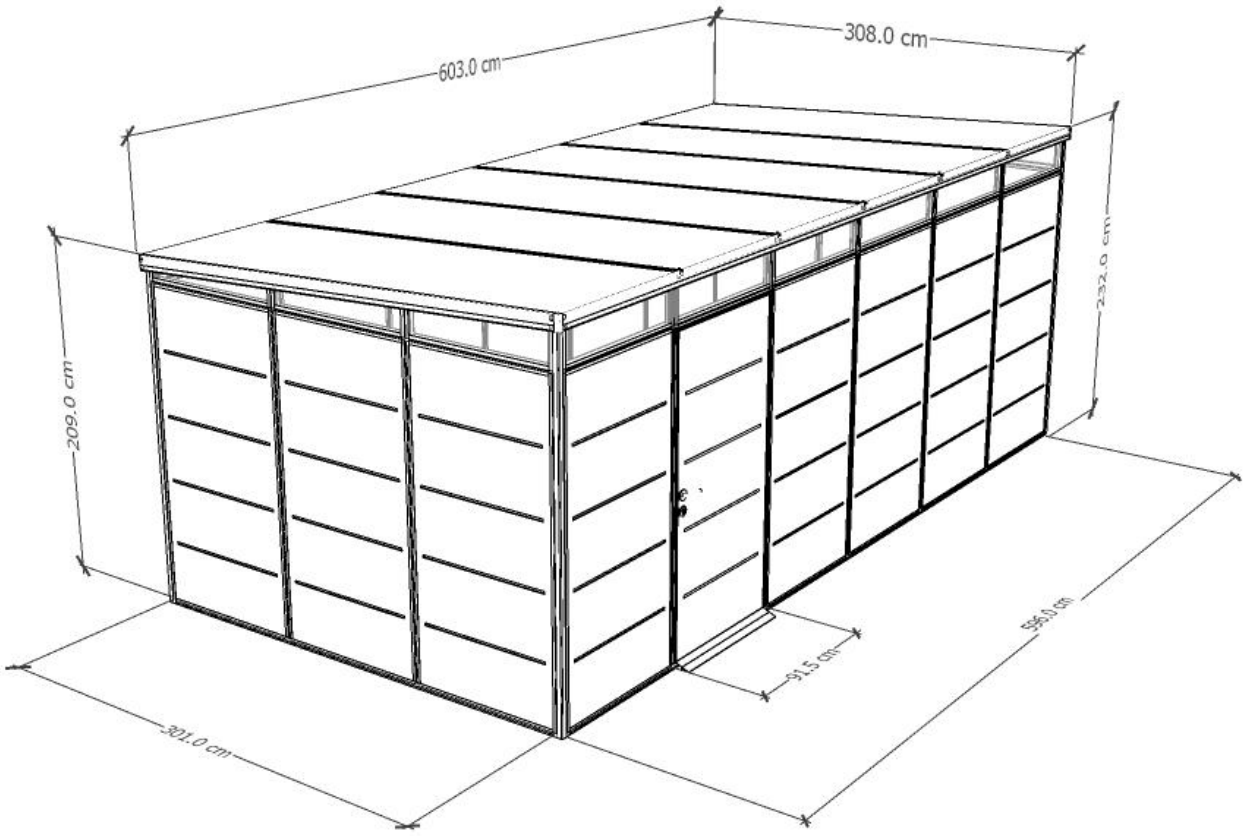

EVERBOX – 6X3