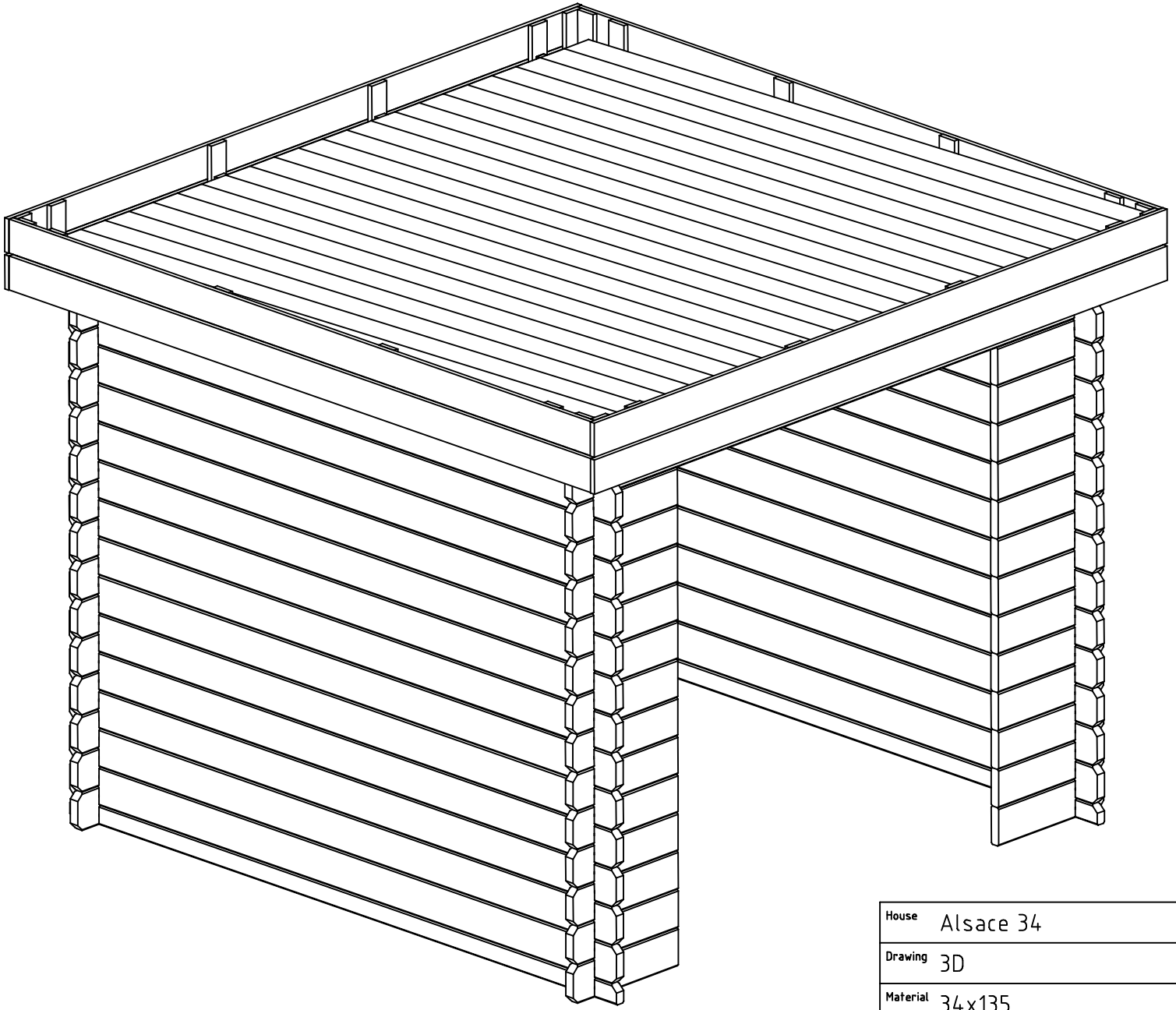

House	Alsace 34	Sheet	1
Drawing	3D	Scale	
Material	34x135	Date	13.07.2020
Drawer	RP	File	Alsace 34 3D.dwg

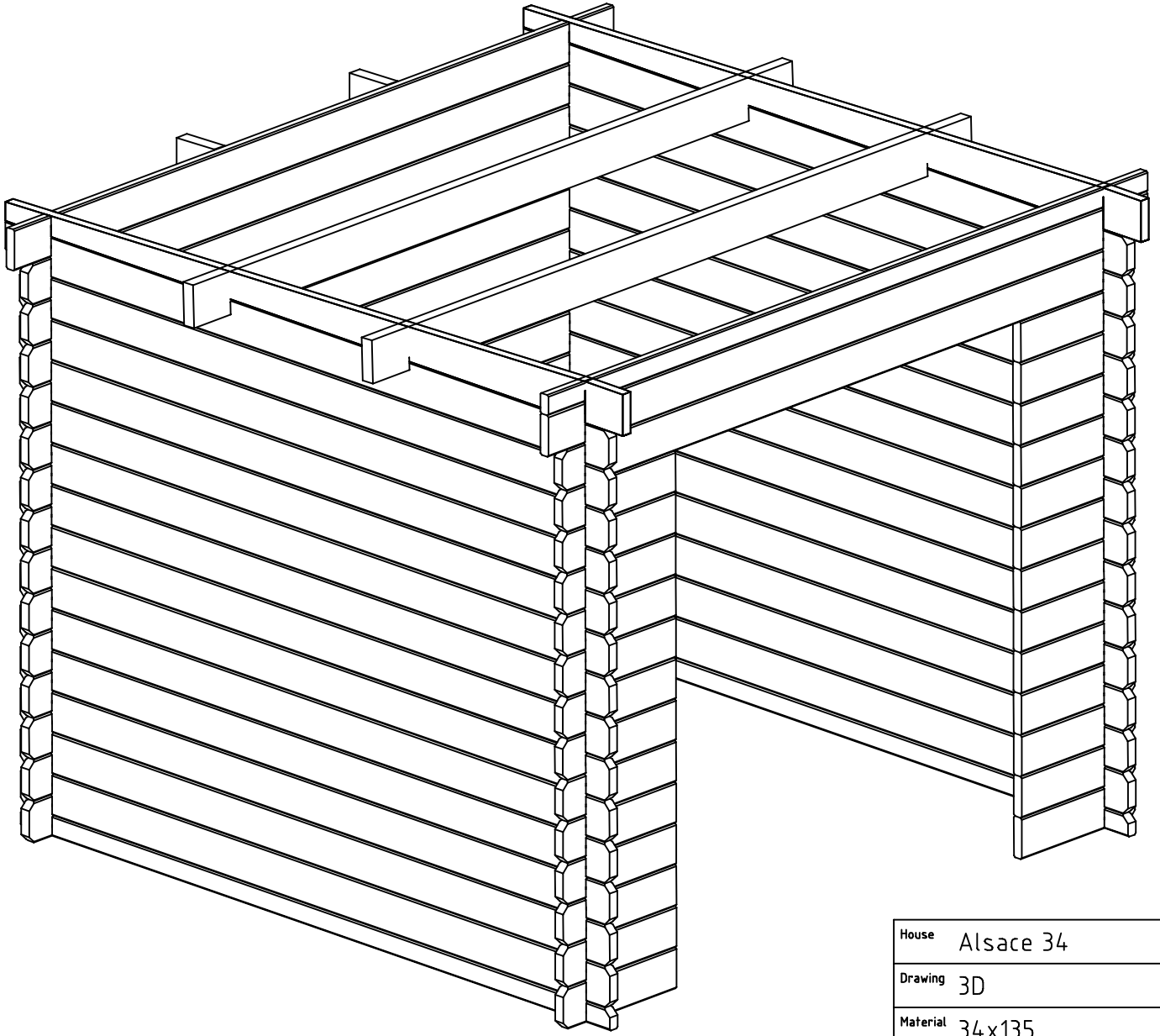

House	Alsace 34	Sheet	2
Drawing	3D	Scale	
Material	34x135	Date	13.07.2020
Drawer	RP	File	Alsace 34 3D.dwg

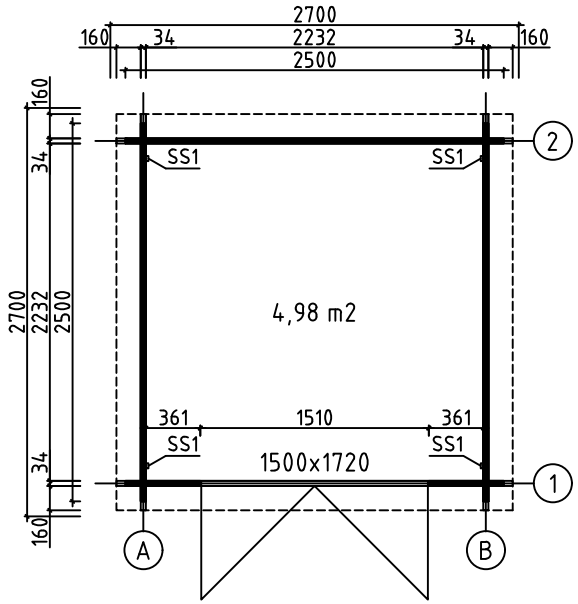

House	Alsace 34	Sheet	3
Drawing	GROUNDPLAN	Scale	1:50
Material	34x135	Date	13.07.2020
Drawer	RP	File	Alsace 34.dwg

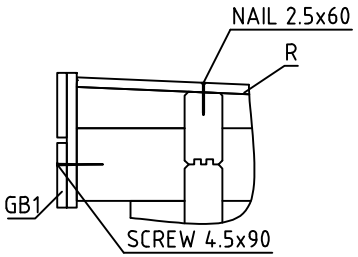

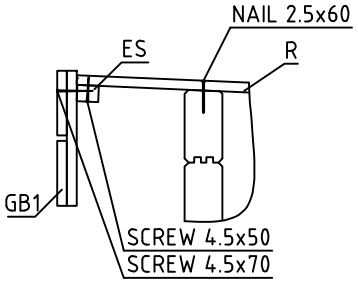

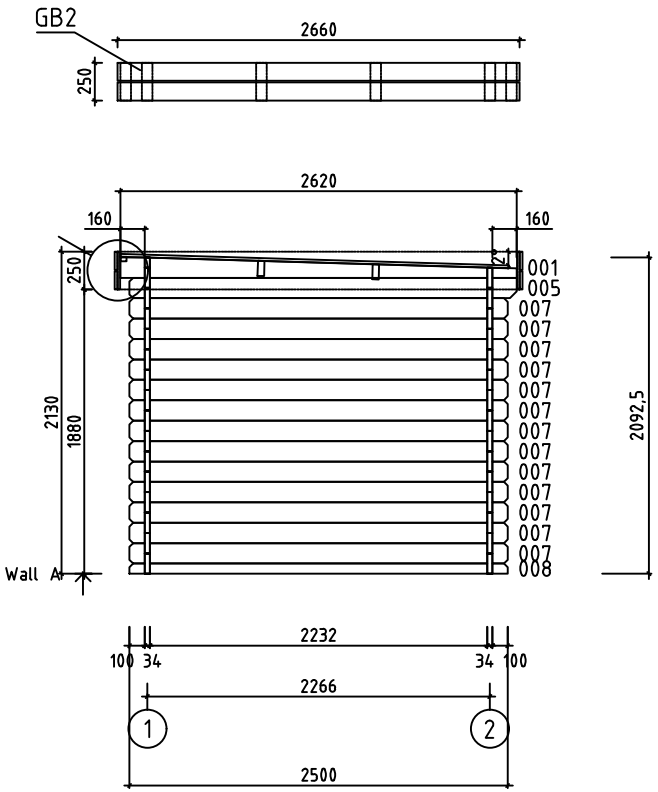

House	Alsace 34	Sheet	4
Drawing	WALL A	Scale	1:50
Material	34x135	Date	13.07.2020
Drawer	RP	File	Alsace 34.dwg

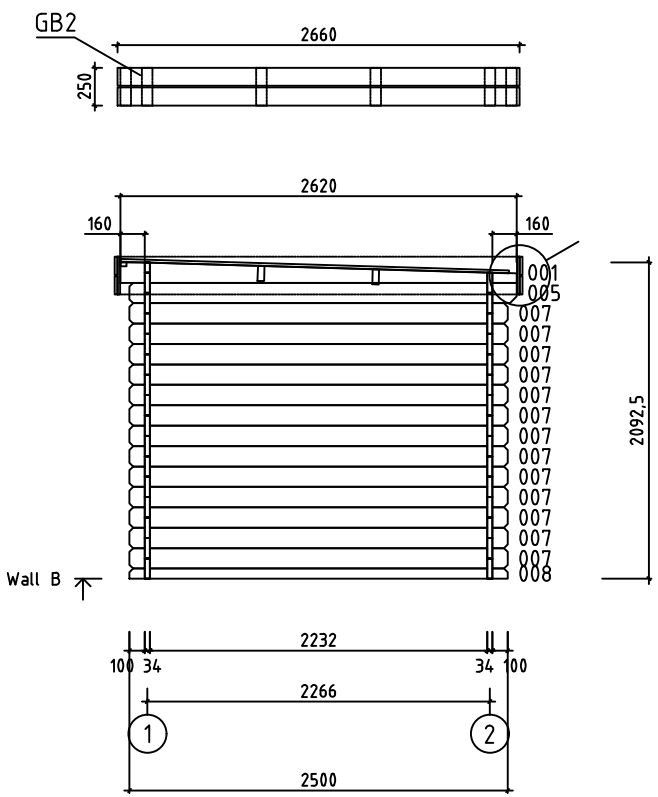

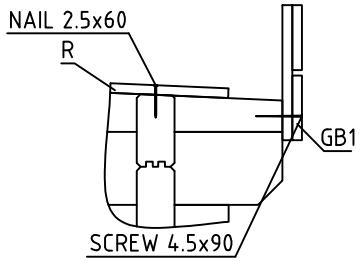

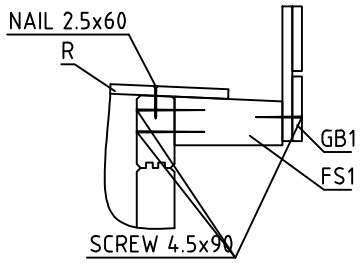

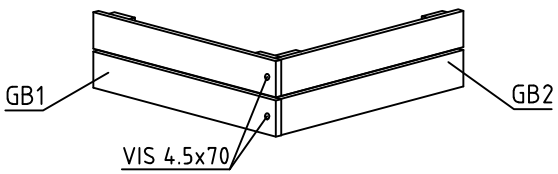

House	Alsace 34	Sheet	5
Drawing	WALL B	Scale	1:50
Material	34x135	Date	13.07.2020
Drawer	RP	File	Alsace 34.dwg

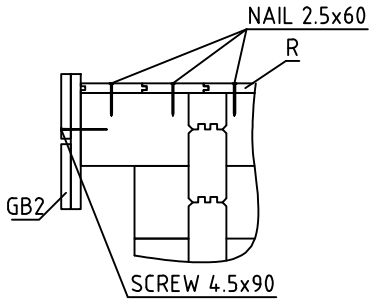

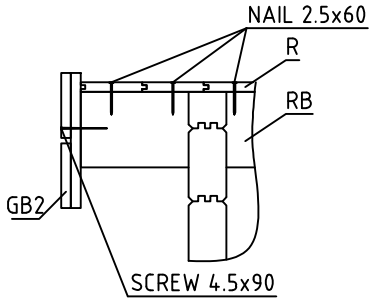

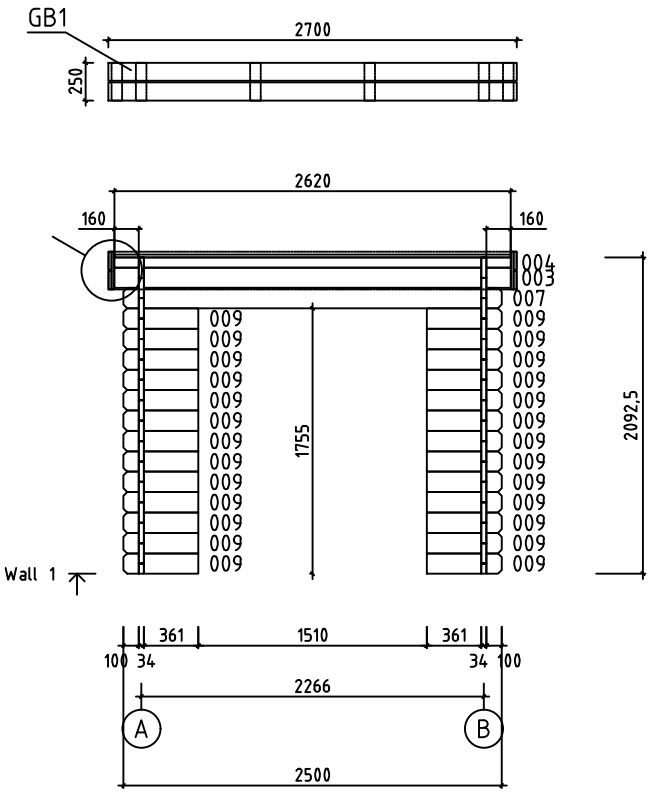

House	Alsace 34	Sheet	6
Drawing	WALL 1	Scale	1:50
Material	34x135	Date	13.07.2020
Drawer	RP	File	Alsace 34.dwg

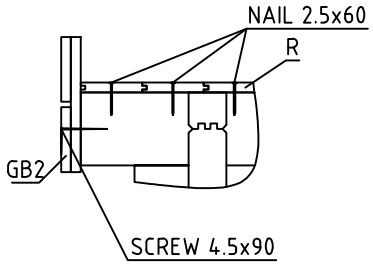

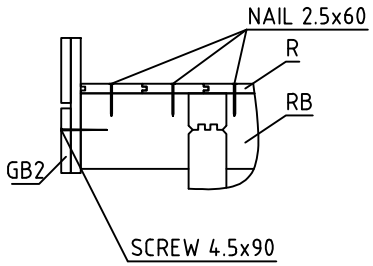

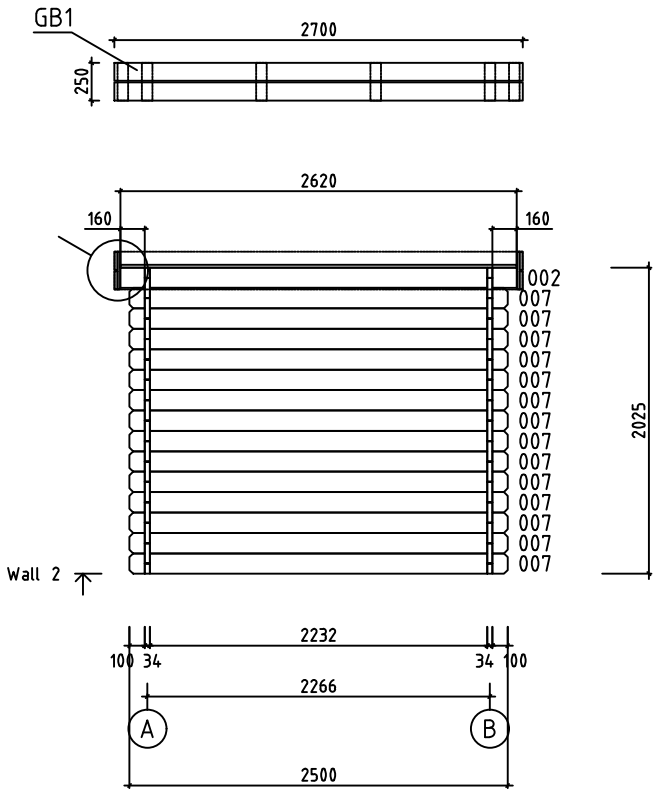

House	Alsace 34	Sheet	7
Drawing	WALL 2	Scale	1:50
Material	34x135	Date	13.07.2020
Drawer	RP	File	Alsace 34.dwg

Pos	Specification-Bestimmung-Spécification	PCS	Profile (mm)	L (mm)
002	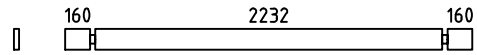	1	34x135	2620
003	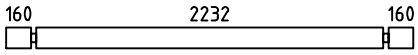	1	34x135	2620
004	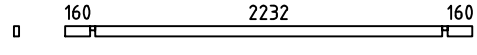	1	34x68	2620
006	SPARE BEAM-ERZATZBOHLE-MADRIER DE RÉSERVE 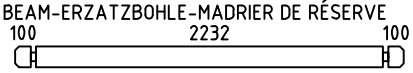	1	34x135	2500
007	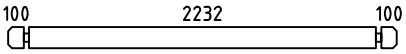	41	34x135	2500
008	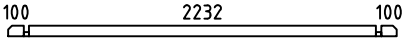	2	34x68	2500
009		26	34x135	495
WA-1 WB-1	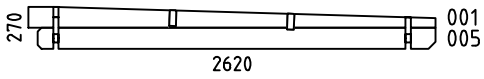	2	34x270	2620
HB	HIT BLOCK-SCHLAGHÖLZER-MADRIERS D´ASSEMBLAGE 	2	34x135	300
FS1	FIXING SLAT-BEFESTIGUNGSLEISTE-SUPPORTS EXTENSION TOITURE	2	45x90	160
RB1	ROOFBEAMS-DACHBALKEN-SOLIVES DE PLAFOND 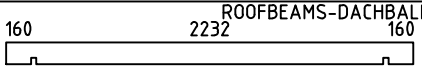	2	43x140	2620
R1	ROOFBOARD-DACHBRETT-VOLIGES  or-oder-ou	23+1 30+1	18x114 18x88	2570
GB1	ASSEMBLY REQUIRED-MONTAGE ERFORDERLICH-ASSEMBLAGE REQUIS 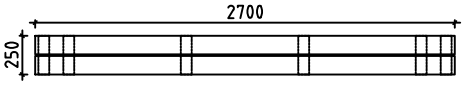	2	36x250	2700
GB2	ASSEMBLY REQUIRED-MONTAGE ERFORDERLICH-ASSEMBLAGE REQUIS 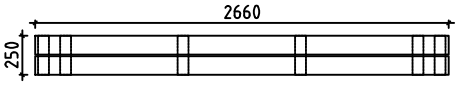	2	36x250	2660
ES1	EAVE SLAT-TRAUFENLEISTE-BAGUETTES POUR FIXER LES LATTES SOUS VOLIGES 	1	30x40	2230
ES2	EAVE SLAT-TRAUFENLEISTE-BAGUETTES POUR FIXER LES LATTES SOUS VOLIGES 	2	30x40	160
SS1	STORM SLAT-STURMLEISTE -BAGUETTE DE TEMPETE TYPE 2	4	18x35	1900
	SCREWS-SCHRAUBEN-VISSER FOR-FÜR-POUR SS1	8	M8	70
	WASHER-SCHEIBE-RONDELLE FOR-FÜR-POUR SS1 	8	M8	
	NUT-NUSS-ÉCROU FOR-FÜR-POUR SS1 	8	M8	
	NAIL-NAGEL-CLOUS FOR-FÜR-POUR COATING FOR ROOF-BESCHICHTUNG FÜR DACH-REVÊTEMENT DE TOIT	110	ø2.5	20
	NAIL-NAGEL-CLOUS FOR-FÜR-POUR R1	130	ø2.5	60

House Alsace 34	Material	File Alsace 34.dwg	Sheet 8

Pos	Specification-Bestimmung-Spécification	PCS	Profile (mm)	L (mm)
	SCREWS-SCHRAUBEN-VIS FOR-FÜR-POUR GB1, GB2 	96	⌀3.5	35
	SCREWS-SCHRAUBEN-VIS FOR-FÜR-POUR ES1, ES2 	10	⌀4.5	50
	SCREWS-SCHRAUBEN-VIS FOR-FÜR-POUR GB1, GB2 	12	⌀4.5	70
	SCREWS-SCHRAUBEN-VIS FOR-FÜR-POUR GB1, GB2, FS1 	16	⌀4.5	90
	SCREWS-SCHRAUBEN-VIS FOR-FÜR-POUR RB1 WA-1, WB-1 	14	⌀6.0	160
	COATING FOR ROOF-BESCHICHTUNG FÜR DACH-REVÉTEMENT DE TOIT 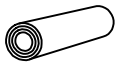	1,0	R = 10m	
	DOUBLEDOOR-DOPPELTÜR-DOUBLE PORTE (right-rechts-droit) AST__PL P	1	1500	1720
	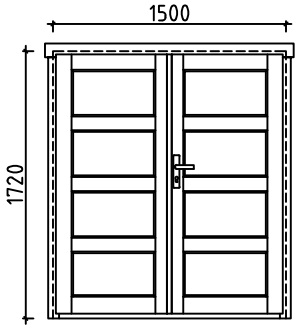			
	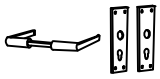	1		
		1		
		1		
		6		

House Alsace 34	Material	File Alsace 34.dwg	Sheet 9

Pos	Assembly Instructions-Montageanleitungen-Instructions de Montage	PCS	Profile (mm)	L (mm)
L1	BOARD-BRETT-PLANCHE	4	18x120	2700
L2	BOARD-BRETT-PLANCHE	4	18x120	2660
L3	BOARD-BRETT-PLANCHE	24	18x70	250
GB1		2	36x250	2700

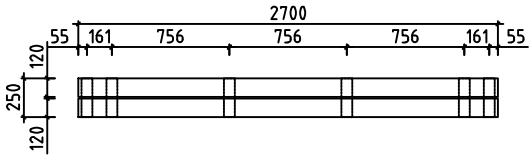

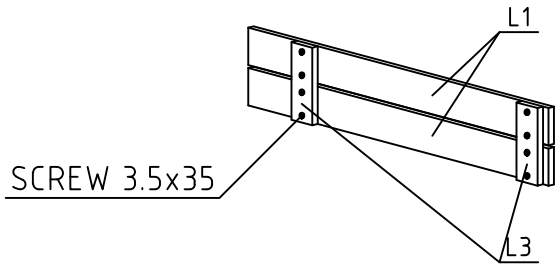

GB2		2	36x250	2660

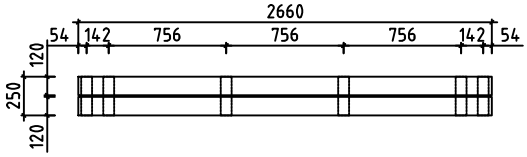

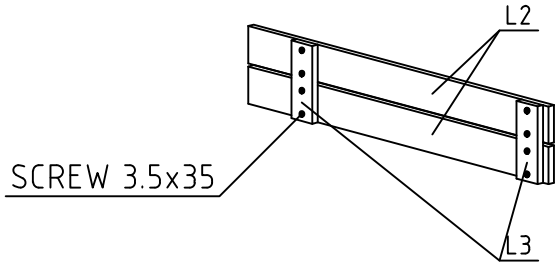

House Alsace 34	Material	File Alsace 34.dwg	Sheet 10

#001	A,B	2620	2
#002	2	2620	1
#003	1	2620	1
#004	1	2620	1
#005	A,B	2560	2
#006		2500	1
#007	1,2,A,B	2500	41
#008	A,B	2500	2
#009	1	495	26