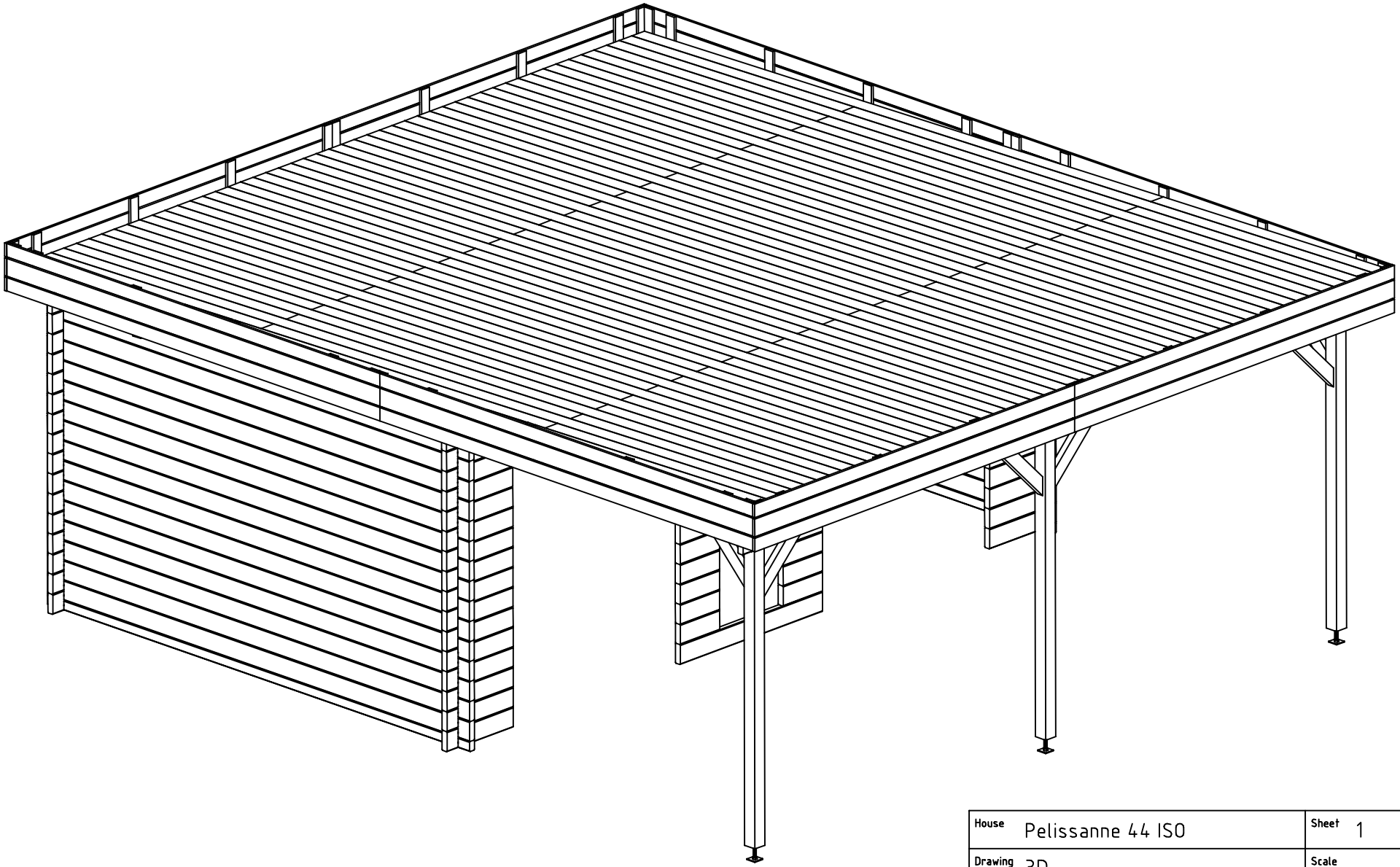

House	Pelissanne 44 ISO	Sheet	1
Drawing	3D	Scale	
Material	44x135	Date	03.09.2021
Drawer	RP	File	Pelissanne 44 ISO 3D.dwg

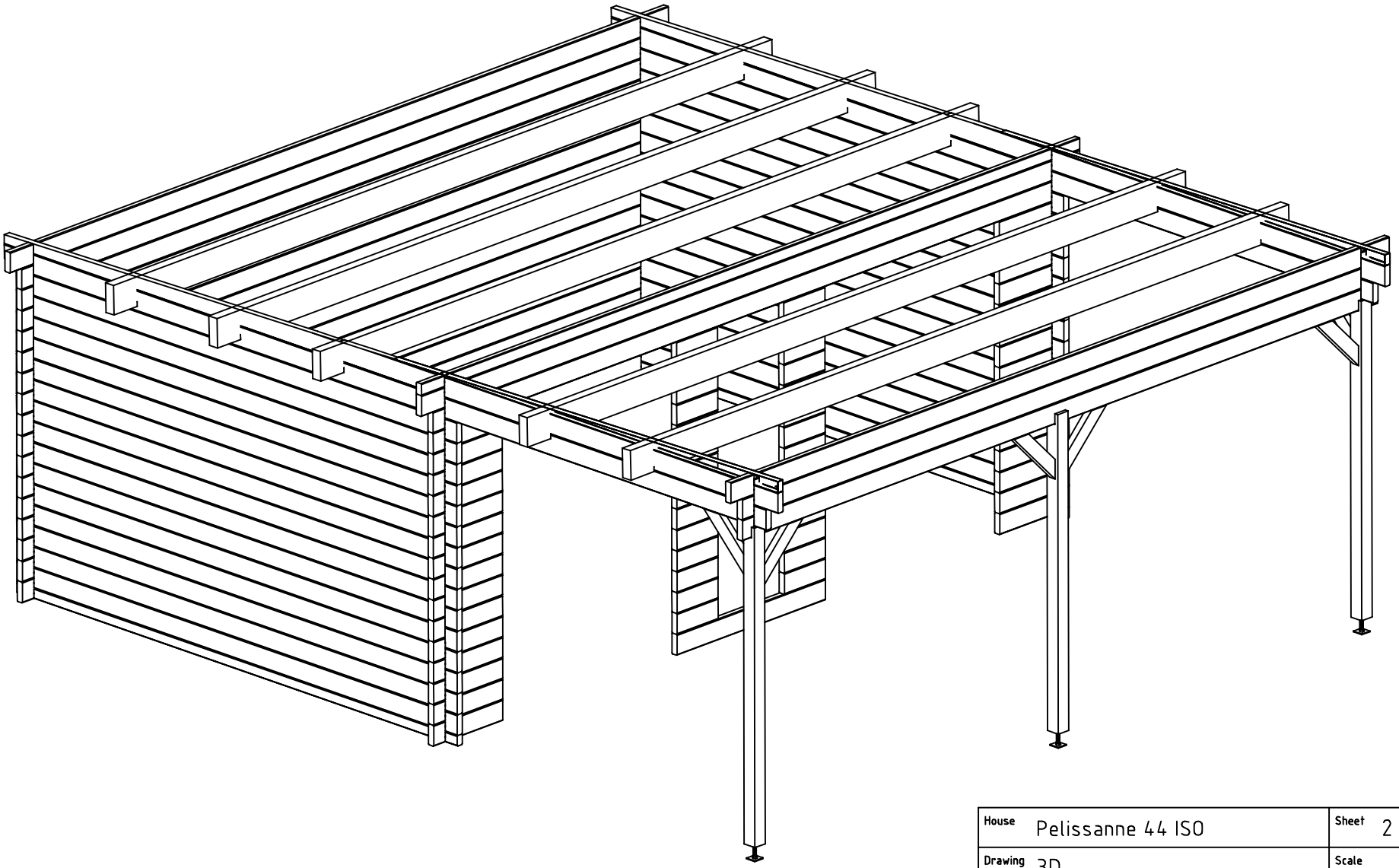

House	Pelissanne 44 ISO	Sheet	2
Drawing	3D	Scale	
Material	44x135	Date	03.09.2021
Drawer	RP	File	Pelissanne 44 ISO 3D.dwg

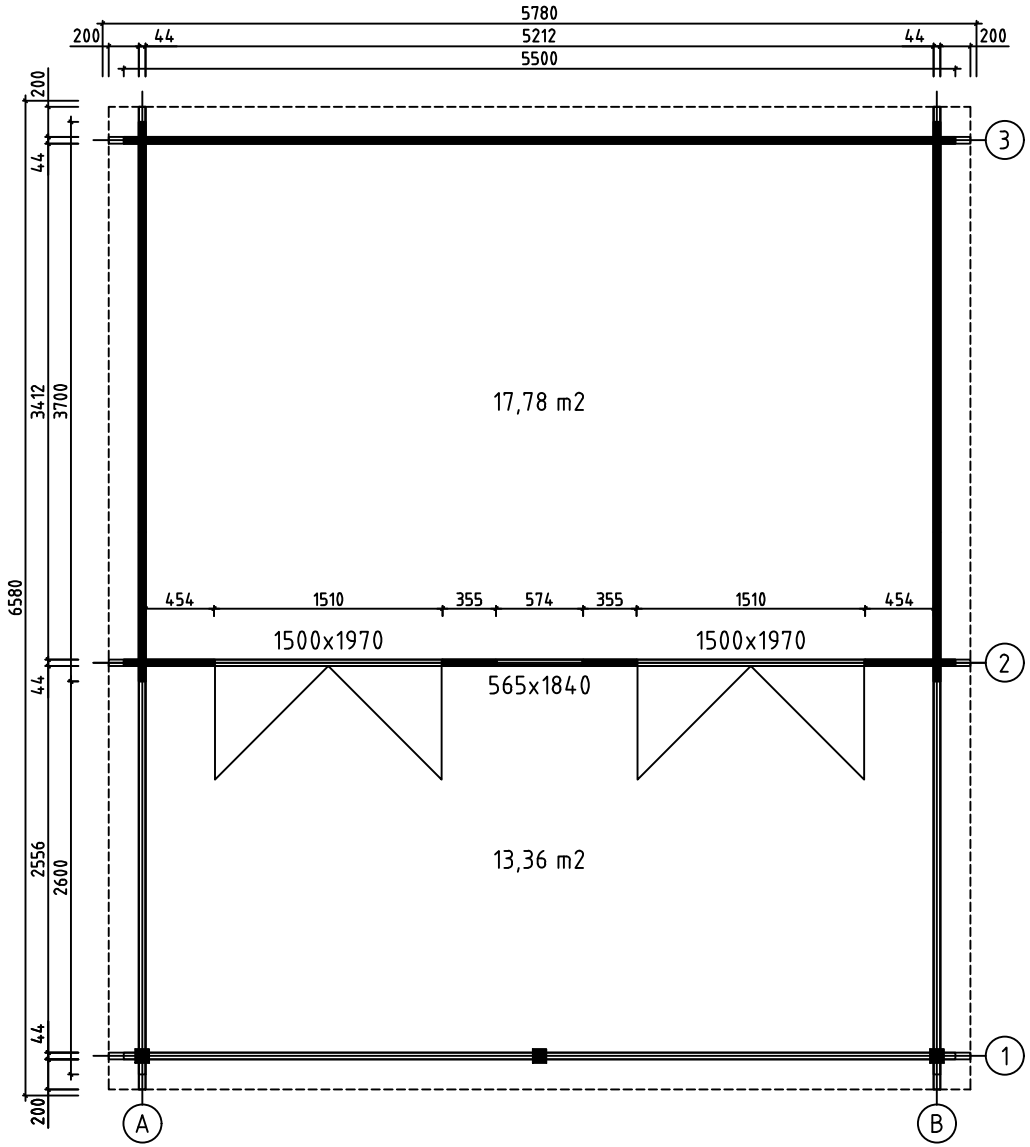

House	Pelissanne 44 ISO	Sheet	3
Drawing	GROUNDPLAN	Scale	1:50
Material	44x135	Date	03.09.2021
Drawer	RP	File	Pelissanne 44 ISO.dwg

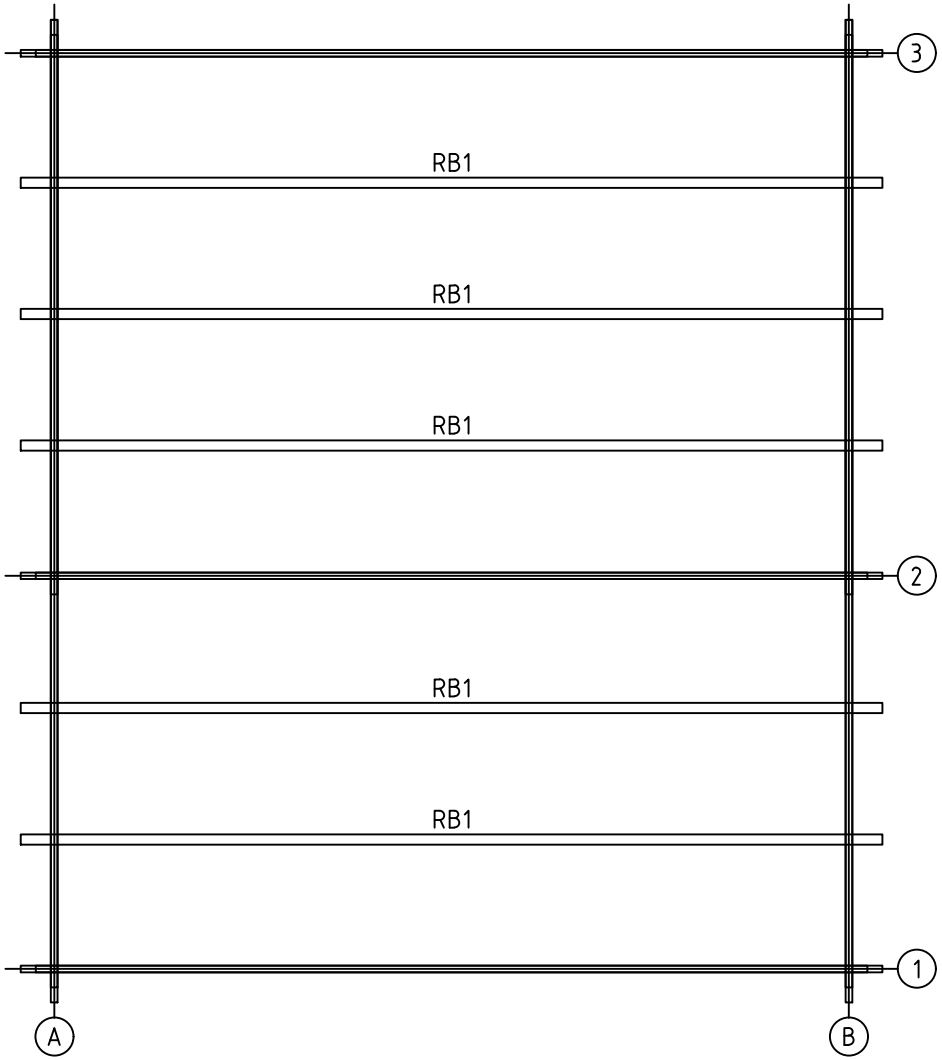

House	Pelissanne 44 ISO	Sheet	4
Drawing	ROOFBEAMS	Scale	1:50
Material	68x190	Date	03.09.2021
Drawer	RP	File	Pelissanne 44 ISO.dwg

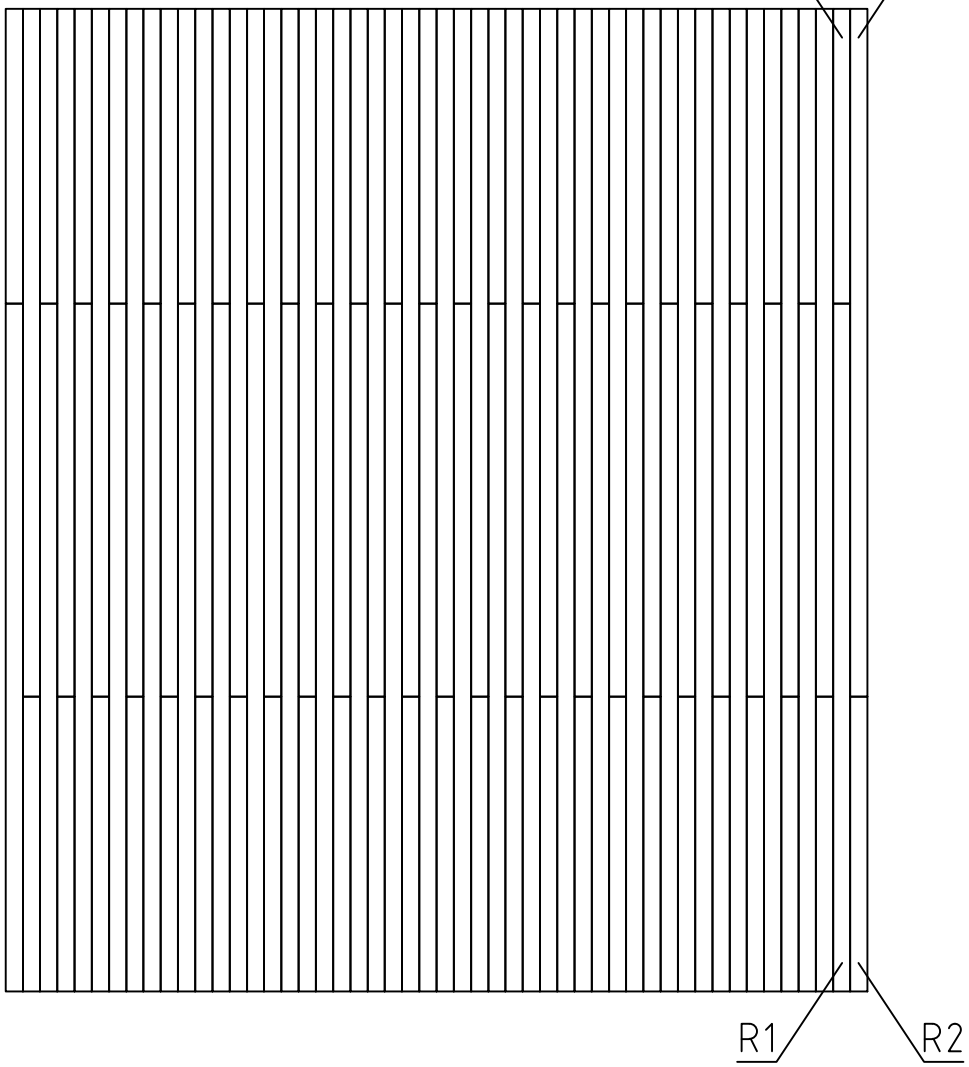

House	Pelissanne 44 ISO	Sheet	5
Drawing	ROOFBOARD	Scale	1:50
Material	18x114	Date	03.09.2021
Drawer	RP	File	Pelissanne 44 ISO.dwg

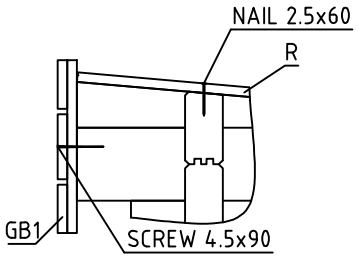

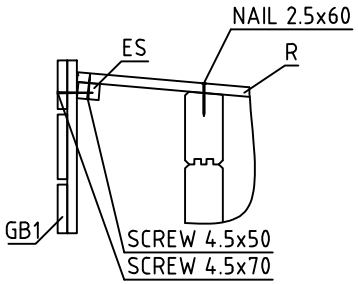

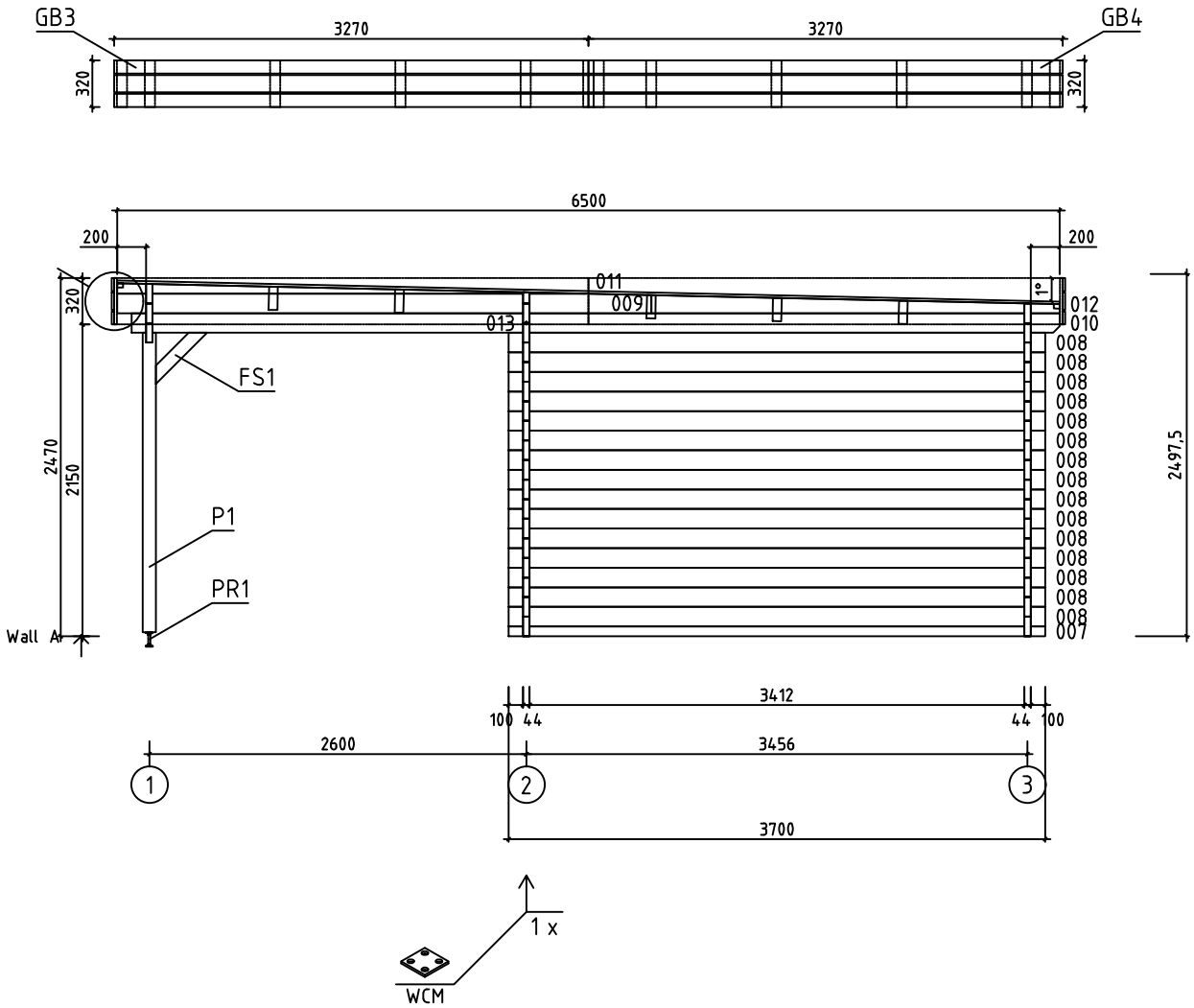

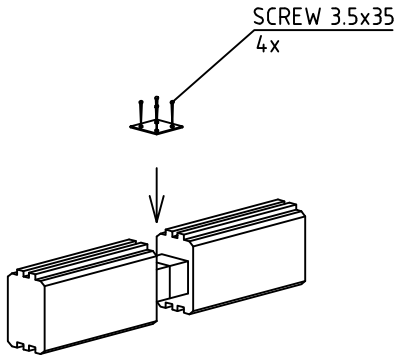

House	Pelissanne 44 ISO	Sheet	6
Drawing	WALL A	Scale	1:50
Material	44x135	Date	03.09.2021
Drawer	RP	File	Pelissanne 44 ISO.dwg

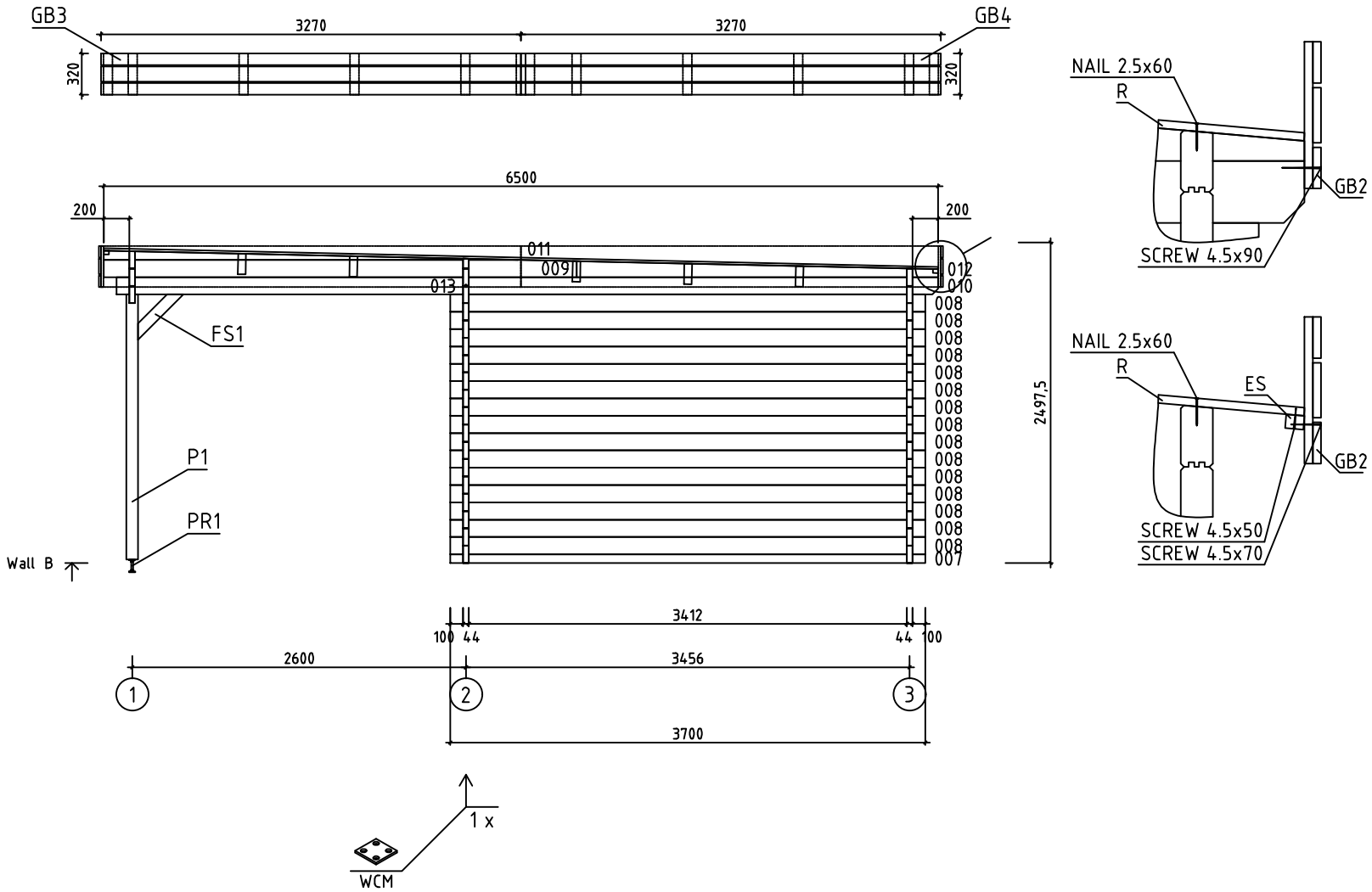

House	Pelissanne 44 ISO	Sheet	7
Drawing	WALL B	Scale	1:50
Material	44x135	Date	03.09.2021
Drawer	RP	File	Pelissanne 44 ISO.dwg

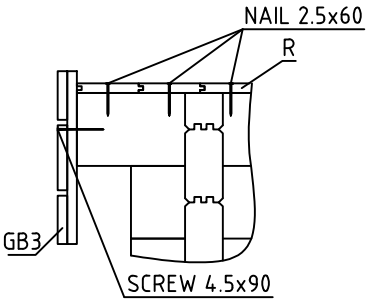

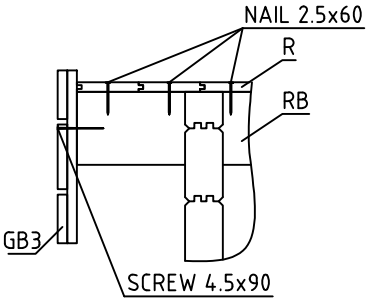

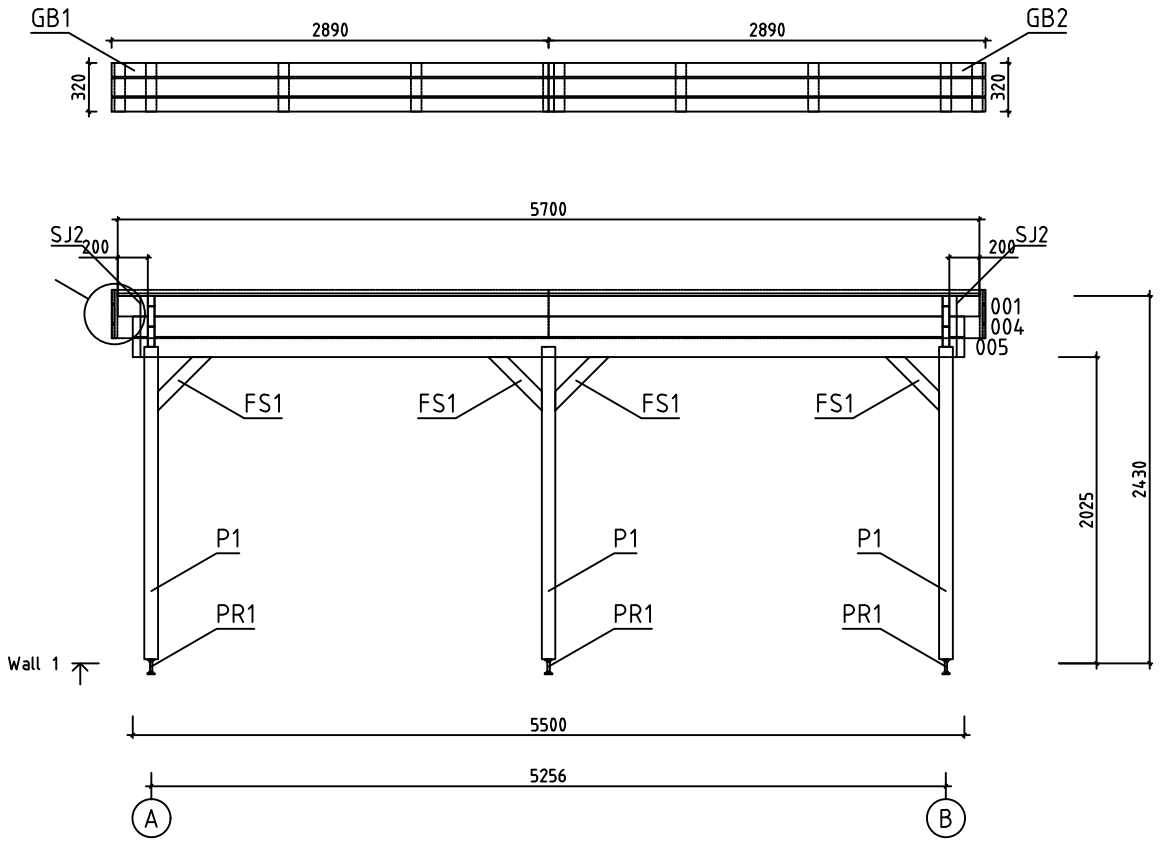

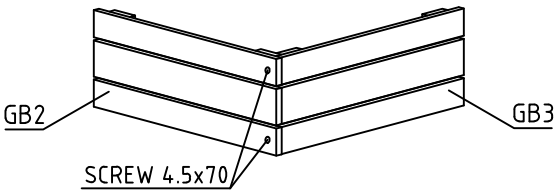

House	Pelissanne 44 ISO	Sheet	8
Drawing	WALL 1	Scale	1:50
Material	44x135	Date	03.09.2021
Drawer	RP	File	Pelissanne 44 ISO.dwg

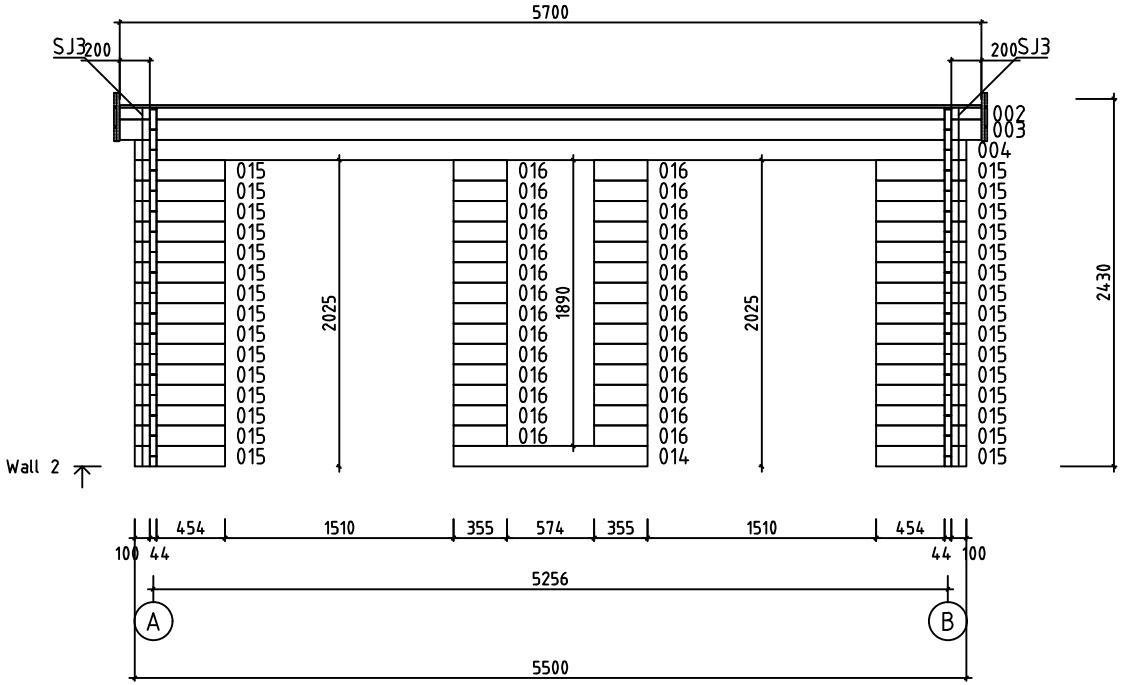

House	Pelissanne 44 ISO	Sheet	9
Drawing	WALL 2	Scale	1:50
Material	44x135	Date	03.09.2021
Drawer	RP	File	Pelissanne 44 ISO.dwg

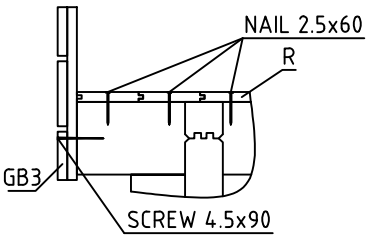

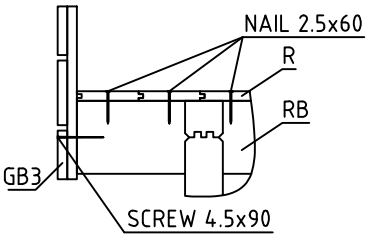

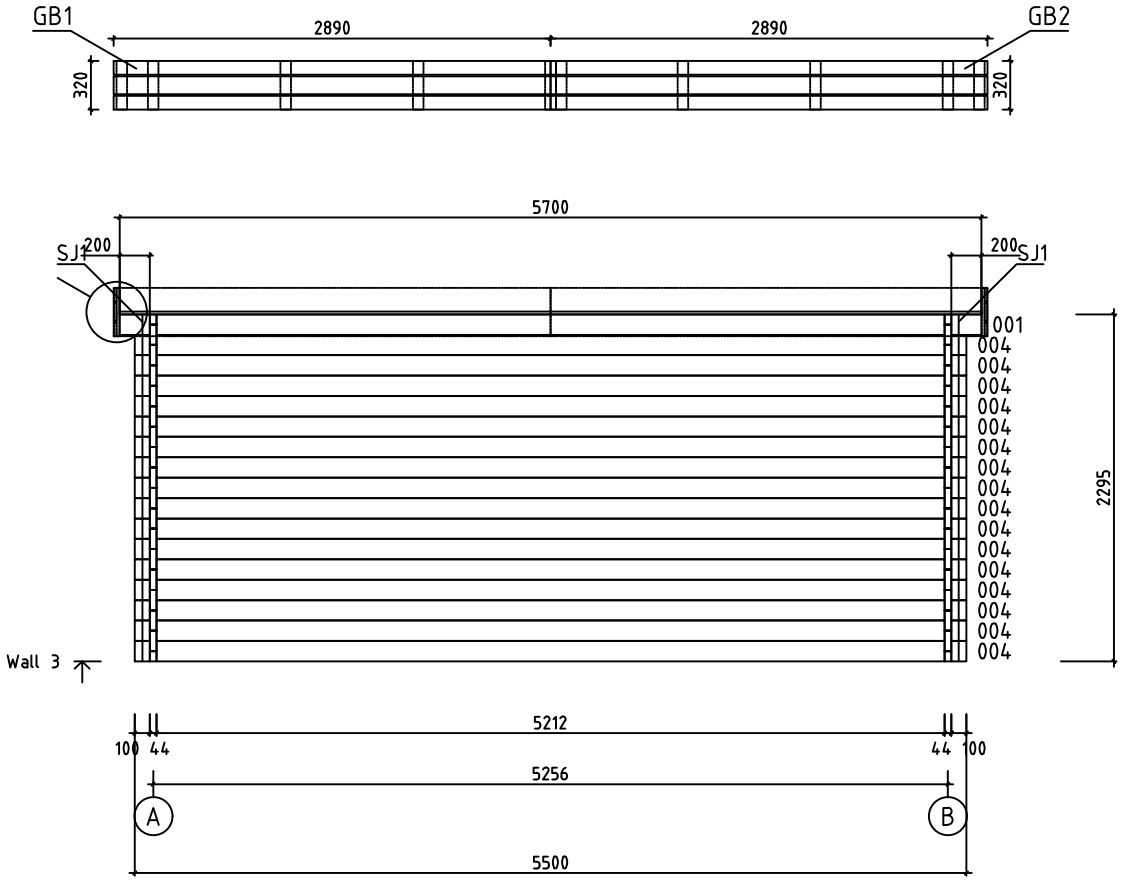

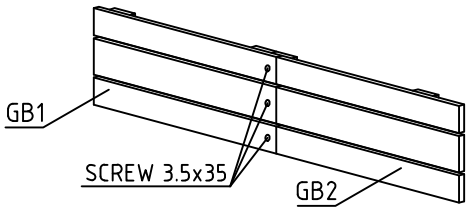

House	Pelissanne 44 ISO	Sheet	10
Drawing	WALL 3	Scale	1:50
Material	44x135	Date	03.09.2021
Drawer	RP	File	Pelissanne 44 ISO.dwg

Pos	Specification-Bestimmung-Spécification	PCS	Profile (mm)	L (mm)
001	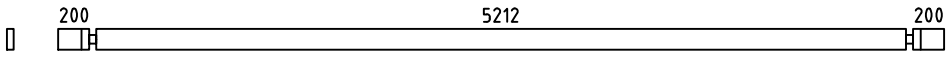	2	44x135	5700
002	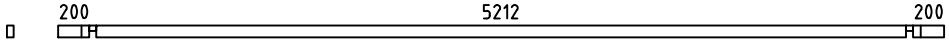	1	44x77	5700
003	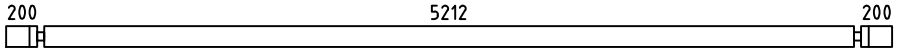	1	44x135	5700
004	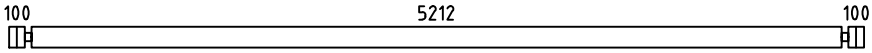	18	44x135	5500
005	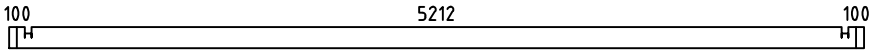	1	44x135	5500
006	SPARE BEAM-ERZATZBOHLE-MADRIER DE RÉSERVE 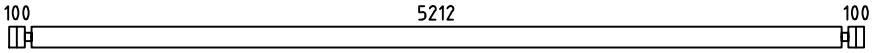	1	44x135	5500
007	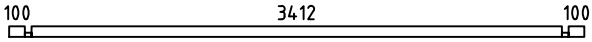	2	44x68	3700
008	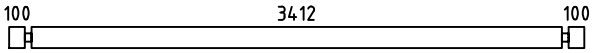	30	44x135	3700
014	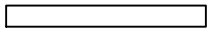	1	44x135	1284
015	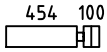	30	44x135	598
016		28	44x135	355
WA-1 WB-1	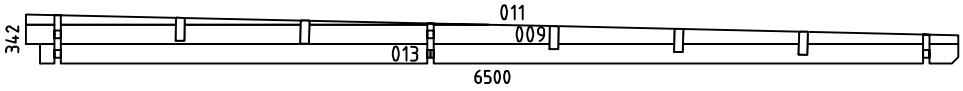	2	44x342	6500
HB	HIT BLOCK-SCHLAGHÖLZER-MADRIERS D´ASSEMBLAGE 	2	44x135	300
FS1	FIXING SLAT-BEFESTIGUNGSLEISTE-BAGUETTES POUR FIXER LES POTEAU 	6	45x90	500
P1	POST-PFOSTEN-POTEAU 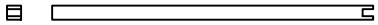	3	90x90	2065
RB1	ROOFBEAMS-DACHBALKEN-SOLIVES DE PLAFOND 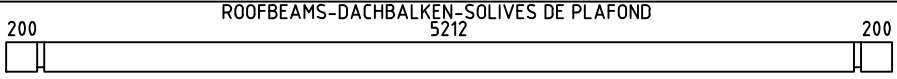	5	68x190	5700
R1	ROOFBOARD-DACHBRETT-VOLIGES  or-oder-ou	50+1 65+1	18x114 18x88	4550
R2	ROOFBOARD-DACHBRETT-VOLIGES  or-oder-ou	50+1 65+1	18x114 18x88	1950
GB1	ASSEMBLY REQUIRED-MONTAGE ERFORDERLICH-ASSEMBLAGE REQUIS 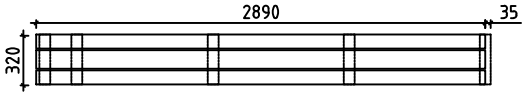	2	36x320	2890 +35
GB2	ASSEMBLY REQUIRED-MONTAGE ERFORDERLICH-ASSEMBLAGE REQUIS 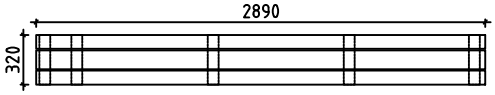	2	36x320	2890
GB3	ASSEMBLY REQUIRED-MONTAGE ERFORDERLICH-ASSEMBLAGE REQUIS 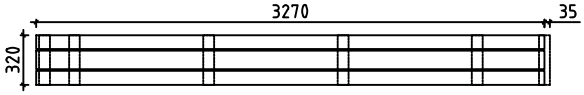	2	36x320	3270 +35

House	Material	File	Sheet
Pelissanne 44 ISO		Pelissanne 44 ISO.dwg	11

Pos	Specification-Bestimmung-Spécification	PCS	Profile (mm)	L (mm)
GB4	ASSEMBLY REQUIRED-MONTAGE ERFORDERLICH-ASSEMBLAGE REQUIS 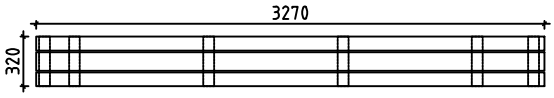	2	36x320	3270
ES1	EAVE SLAT-TRAUFENLEISTE-BAGUETTES POUR FIXER LES LATTES SOUS VOLIGES	4	30x40	2605
ES2	EAVE SLAT-TRAUFENLEISTE-BAGUETTES POUR FIXER LES LATTES SOUS VOLIGES	4	30x40	200
SJ1	SCREW JOINT-GEWINDESTANGE -TIGES FILETÉS	2	M10	2320
SJ2	SCREW JOINT-GEWINDESTANGE -TIGES FILETÉS	2	M10	430
SJ3	SCREW JOINT-GEWINDESTANGE -TIGES FILETÉS	2	M10	2400
WCM	WALLBEAMS CONNECTING METAL-WANDBOHLEN BEFESTIGUNG -METALLE-PATTE D´ASSEMBLAGE	2	25	25
PR1	POST REGULATOR-PFOSTEN REGLER- PIED MÉTALLIQUE RÉGLABLE POUR POTEAU	3		
	NAIL-NAGEL-CLOUS FOR-FÜR-POUR COATING FOR ROOF-BESCHICHTUNG FÜR DACH-REVÉTEMENT DE TOIT	460	ϕ2.5	20
	NAIL-NAGEL-CLOUS FOR-FÜR-POUR R1, R2	600	ϕ2.5	60
	SCREWS-SCHRAUBEN-VIS FOR-FÜR-POUR GB1, GB2, GB3, GB4, WCM	284	ϕ3.5	35
	SCREWS-SCHRAUBEN-VIS FOR-FÜR-POUR ES1, ES2, P1, PR1	60	ϕ4.5	50
	SCREWS-SCHRAUBEN-VIS FOR-FÜR-POUR GB1, GB2, GB3, GB4	20	ϕ4.5	70
	SCREWS-SCHRAUBEN-VIS FOR-FÜR-POUR GB1, GB2, GB3, GB4, FS1	40	ϕ4.5	90
	SCREWS-SCHRAUBEN-VIS FOR-FÜR-POUR WA-1, WB-1, RB1	30	ϕ6.0	160
	COATING FOR ROOF-BESCHICHTUNG FÜR DACH-REVÉTEMENT DE TOIT	4,0	R = 15m	
	DOUBLEDOOR-DOPPELTÜR-DOUBLE PORTE (right-rechts-droit) ORT_ECO P 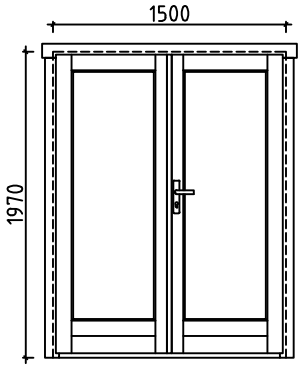 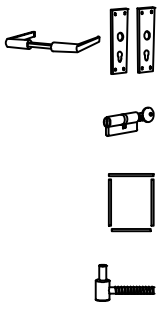	2 2 2 2 12	1500	1970

House Pelissanne 44 ISO	Material	File Pelissanne 44 ISO.dwg	Sheet 12

Pos	Specification-Bestimmung-Spécification	PCS	Profile (mm)	L (mm)
	WINDOW-FENSTER-VENSTER (right-rechts-rechts) ORT_ECO P	1	565	1840
	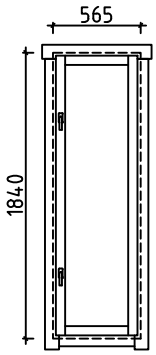			
		2		
		1		

House Pelissanne 44 ISO	Material	File Pelissanne 44 ISO.dwg	Sheet 13

Pos	Assembly Instructions-Montageanleitungen-Instructions de Montage	PCS	Profile (mm)	L (mm)
L1	BOARD-BRETT-PLANCHE	4	18x120	2890
L2	BOARD-BRETT-PLANCHE	8	18x90	2890
L3	BOARD-BRETT-PLANCHE	4	18x120	3270
L4	BOARD-BRETT-PLANCHE	8	18x90	3270
L5	BOARD-BRETT-PLANCHE	44	18x70	320

GB1

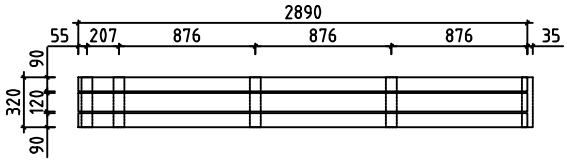

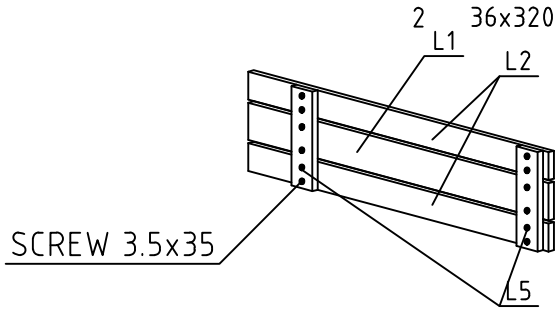

2890 +35

GB2

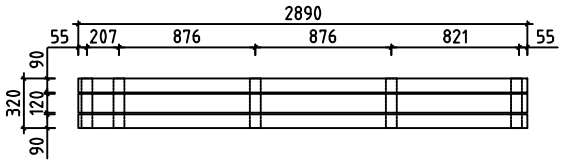

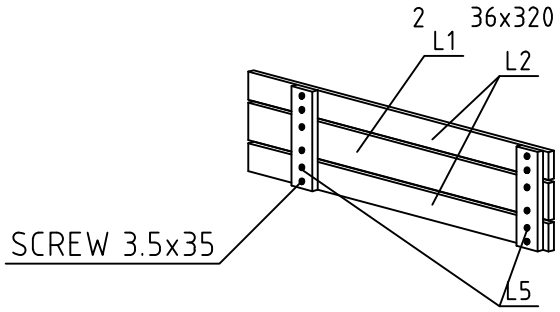

2890

GB3

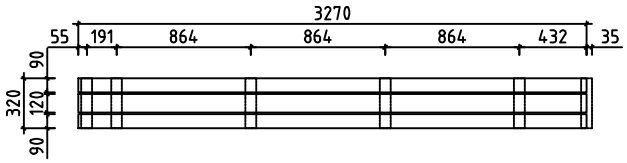

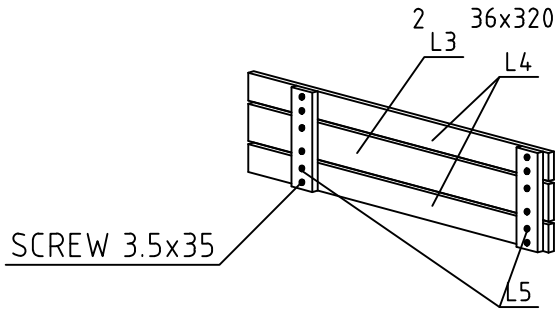

3270 +35

GB4

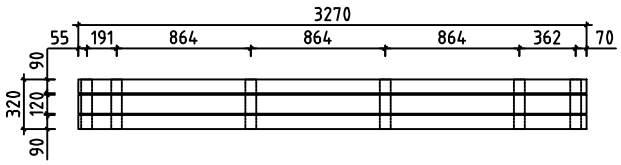

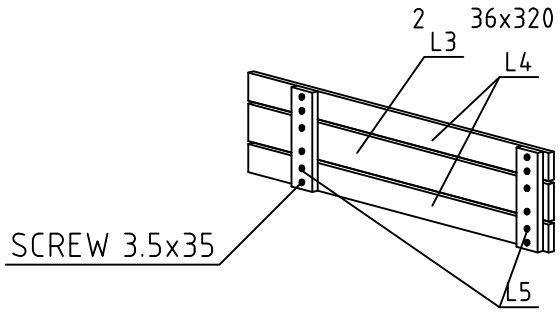

3270

House Pelissanne 44 ISO	Material	File Pelissanne 44 ISO.dwg	Sheet 14

#001	1,3	5700	2
#002	2	5700	1
#003	2	5700	1
#004	1,2,3	5500	18
#005	1	5500	1
#006		5500	1
#007	A,B	3700	2
#008	A,B	3700	30
#009	A,B	3685	2
#010	A,B	3678	2
#011	A,B	3228	2
#012	A,B	2815	2
#013	A,B	2722	2
#014	2	1284	1
#015	2	598	30
#016	2	355	28