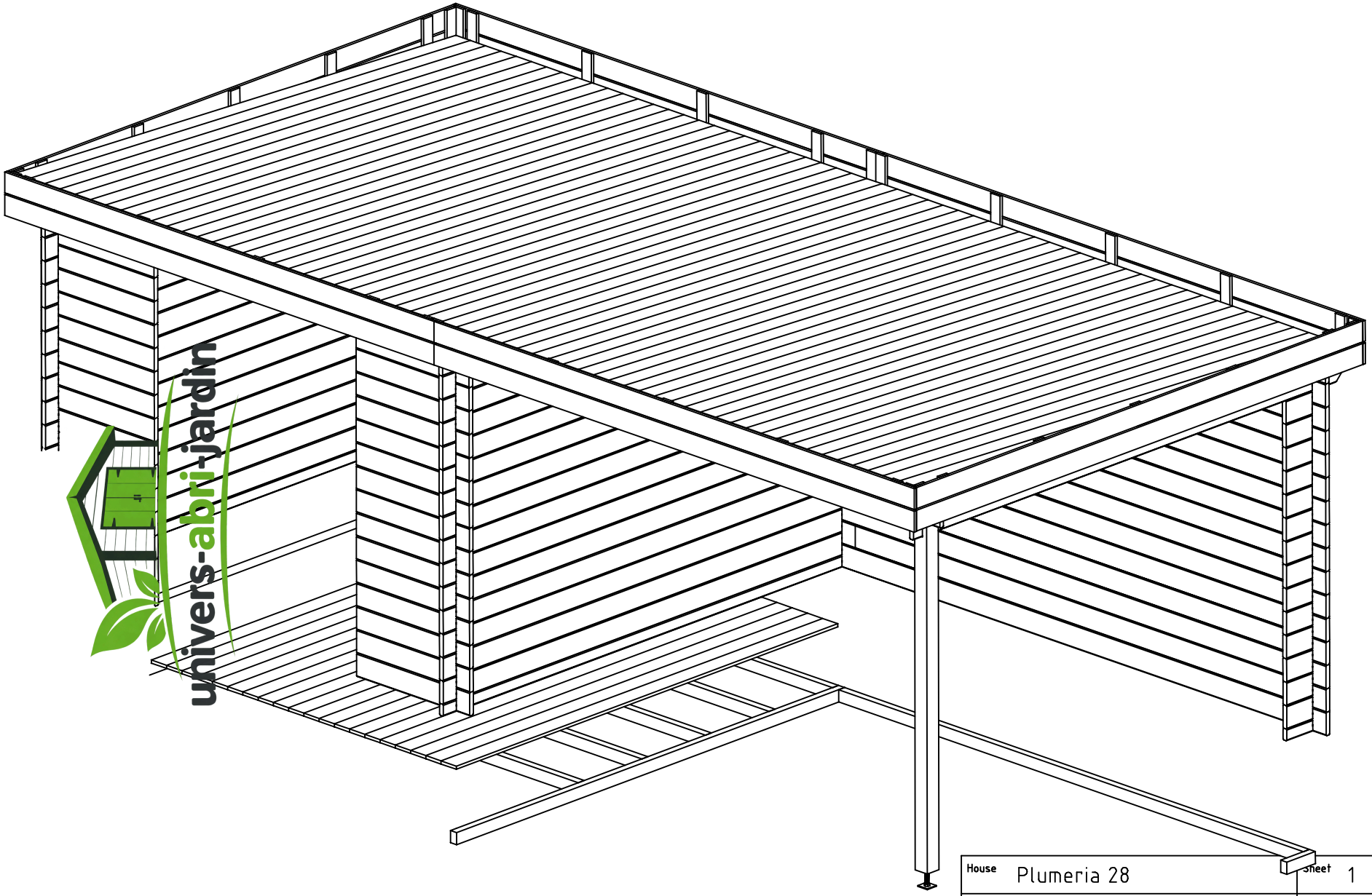

univers-abri-jardin

House	Plumeria 28	Sheet	1
Drawing	3D	Scale	
Material	28x135	Date	18.12.2017
Drawer	RP	File	Plumeria 28 3D.dwg

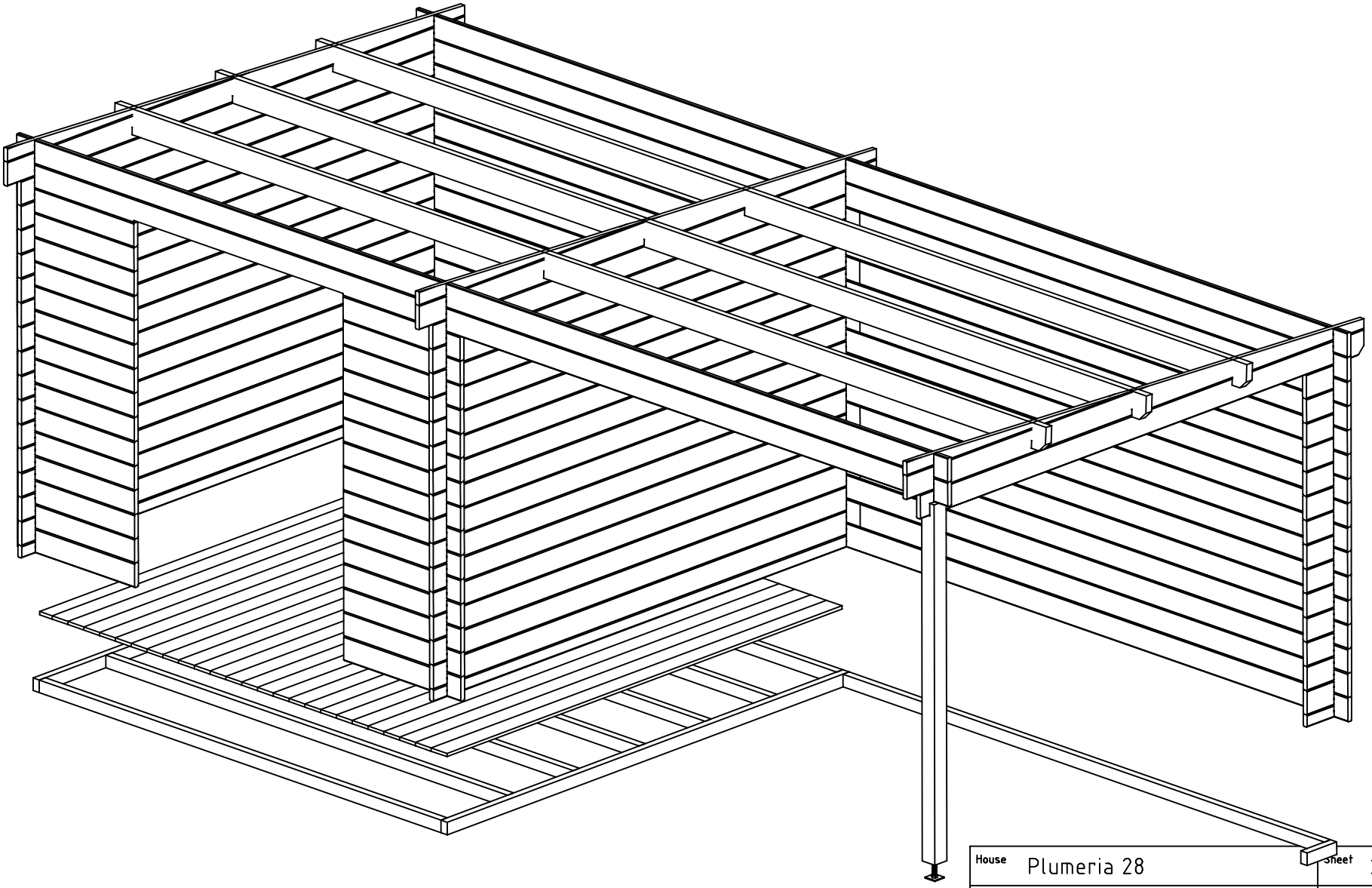

House	Plumeria 28	Sheet	2
Drawing	3D	Scale	
Material	28x135	Date	18.12.2017
Drawer	RP	File	Plumeria 28 3D.dwg

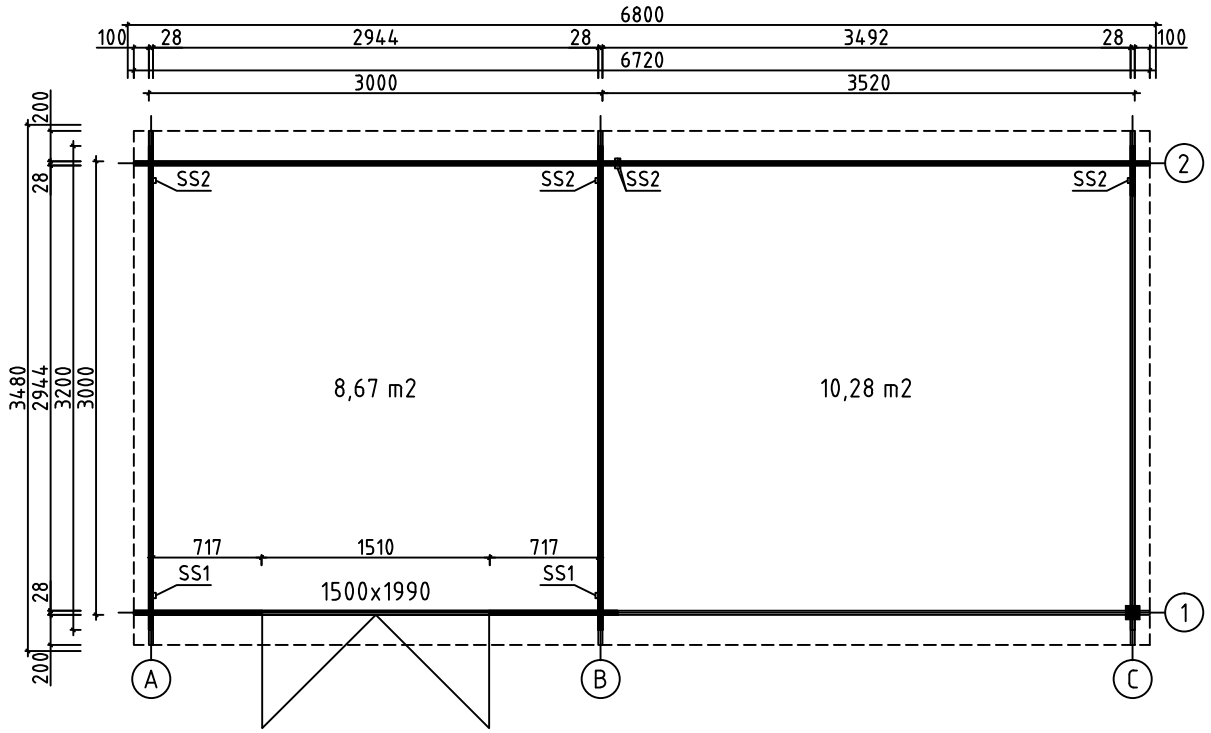

House	Plumeria 28	Sheet	3
Drawing	GROUNDPLAN	Scale	1:50
Material	28x135	Date	18.12.2017
Drawer	RP	File	Plumeria 28.dwg

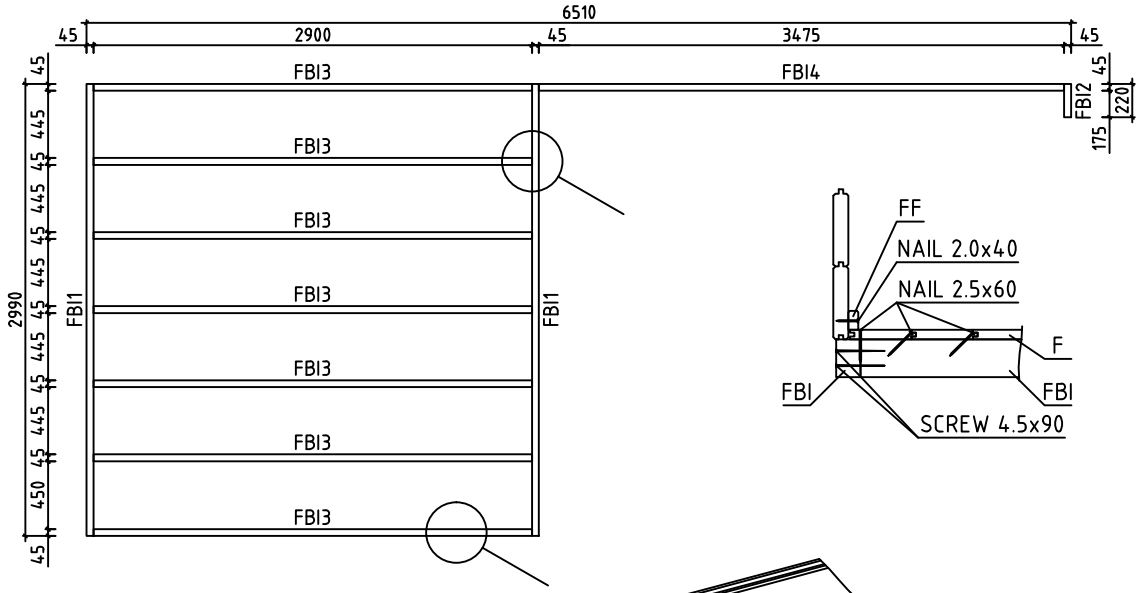

House	Plumeria 28	Sheet	4
Drawing	FLOORBEAMS	Scale	1:50
Material	45x70	Date	18.12.2017
Drawer	RP	File	Plumeria 28.dwg

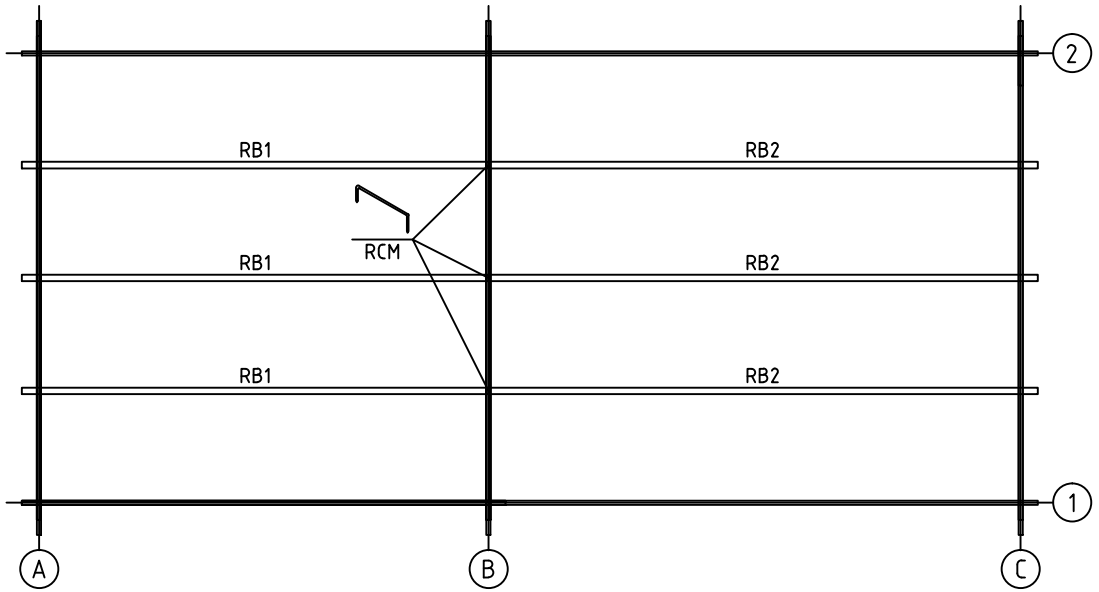

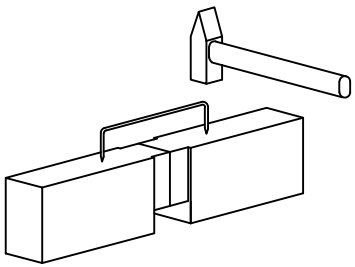

House	Plumeria 28	Sheet	5
Drawing	ROOFBEAMS	Scale	1:50
Material	43x140	Date	18.12.2017
Drawer	RP	File	Plumeria 28.dwg

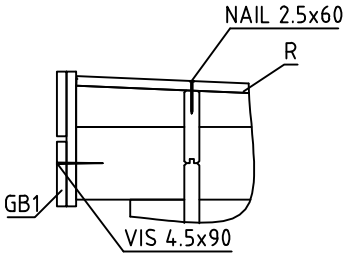

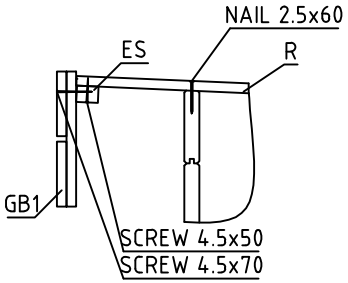

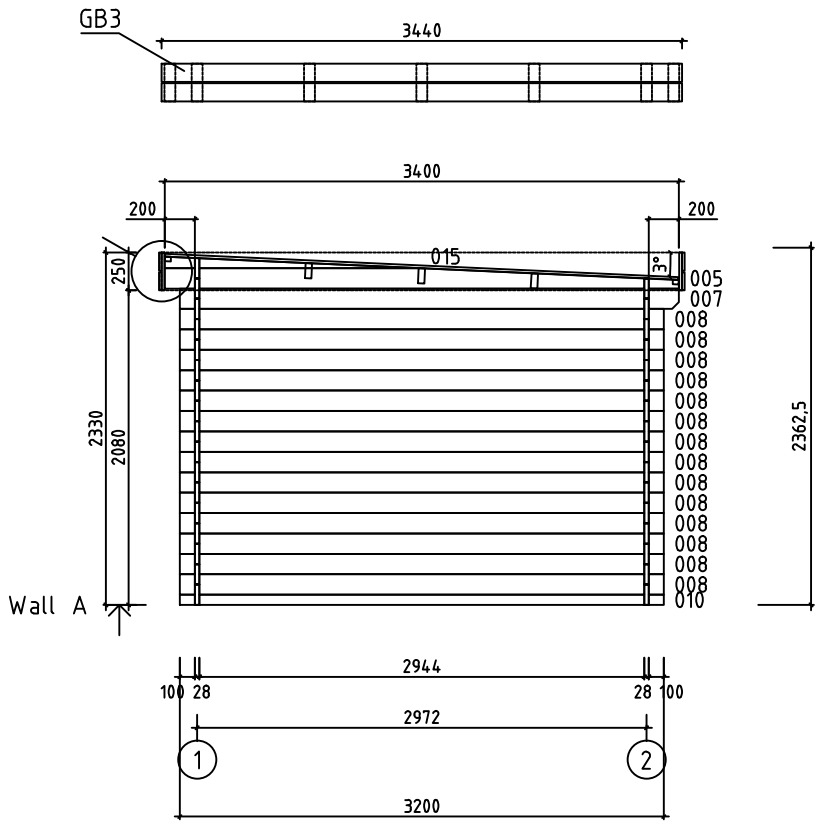

House	Plumeria 28	Sheet	6
Drawing	WALL A	Scale	1:50
Material	28x135	Date	18.12.2017
Drawer	RP	File	Plumeria 28.dwg

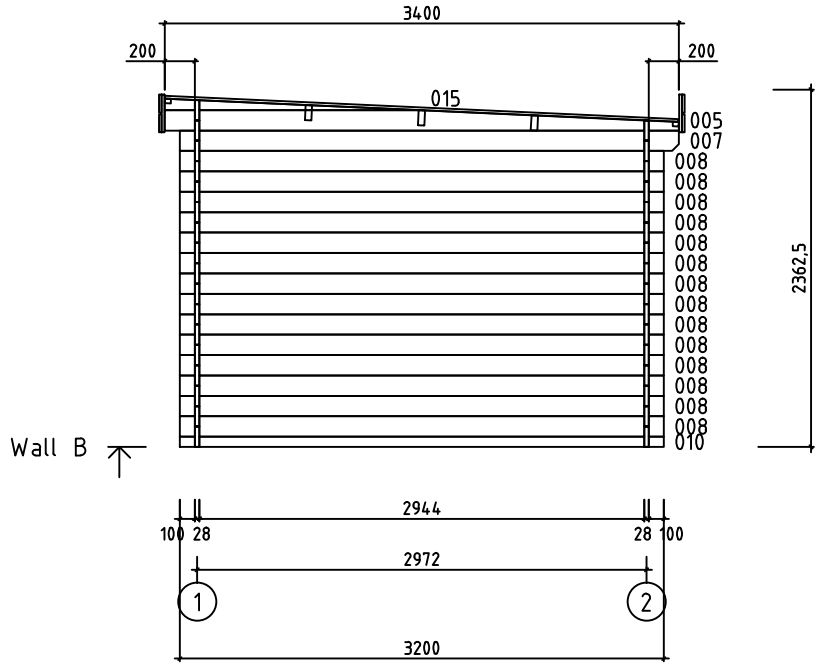

House	Plumeria 28	Sheet	7
Drawing	WALL B	Scale	1:50
Material	28x135	Date	18.12.2017
Drawer	RP	File	Plumeria 28.dwg

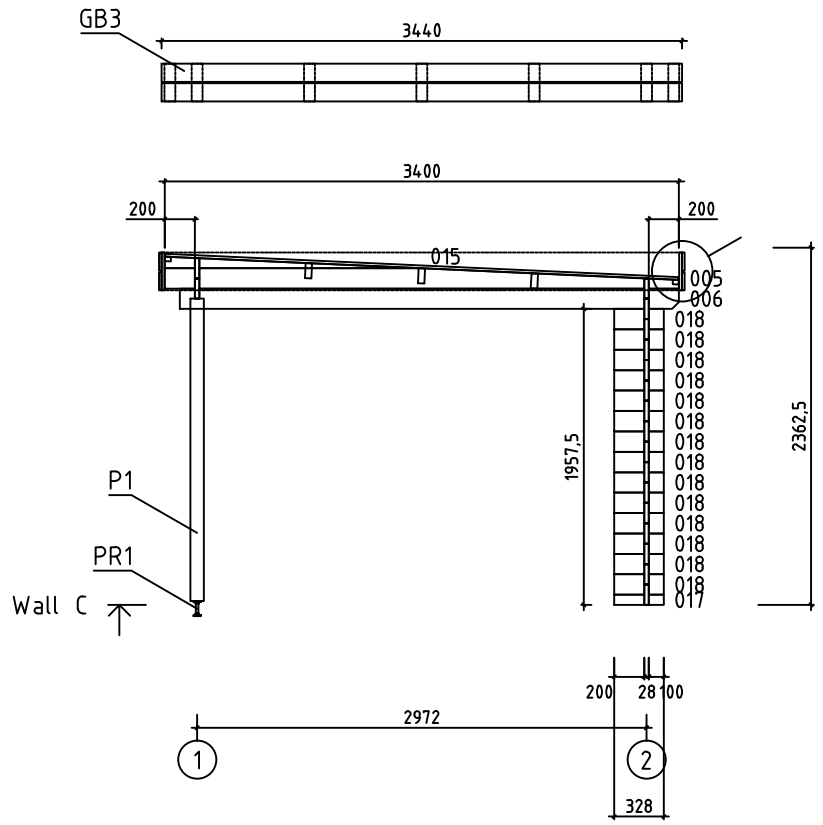

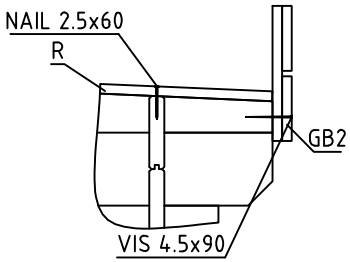

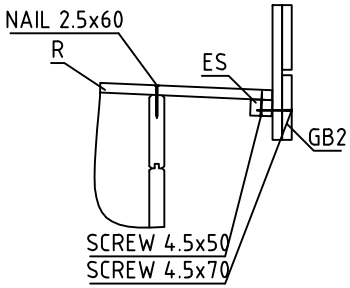

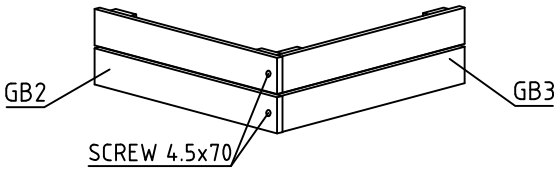

House	Plumeria 28	Sheet	8
Drawing	WALL C	Scale	1:50
Material	28x135	Date	18.12.2017
Drawer	RP	File	Plumeria 28.dwg

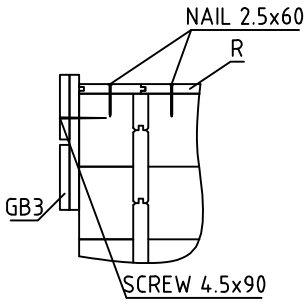

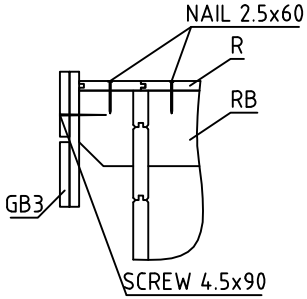

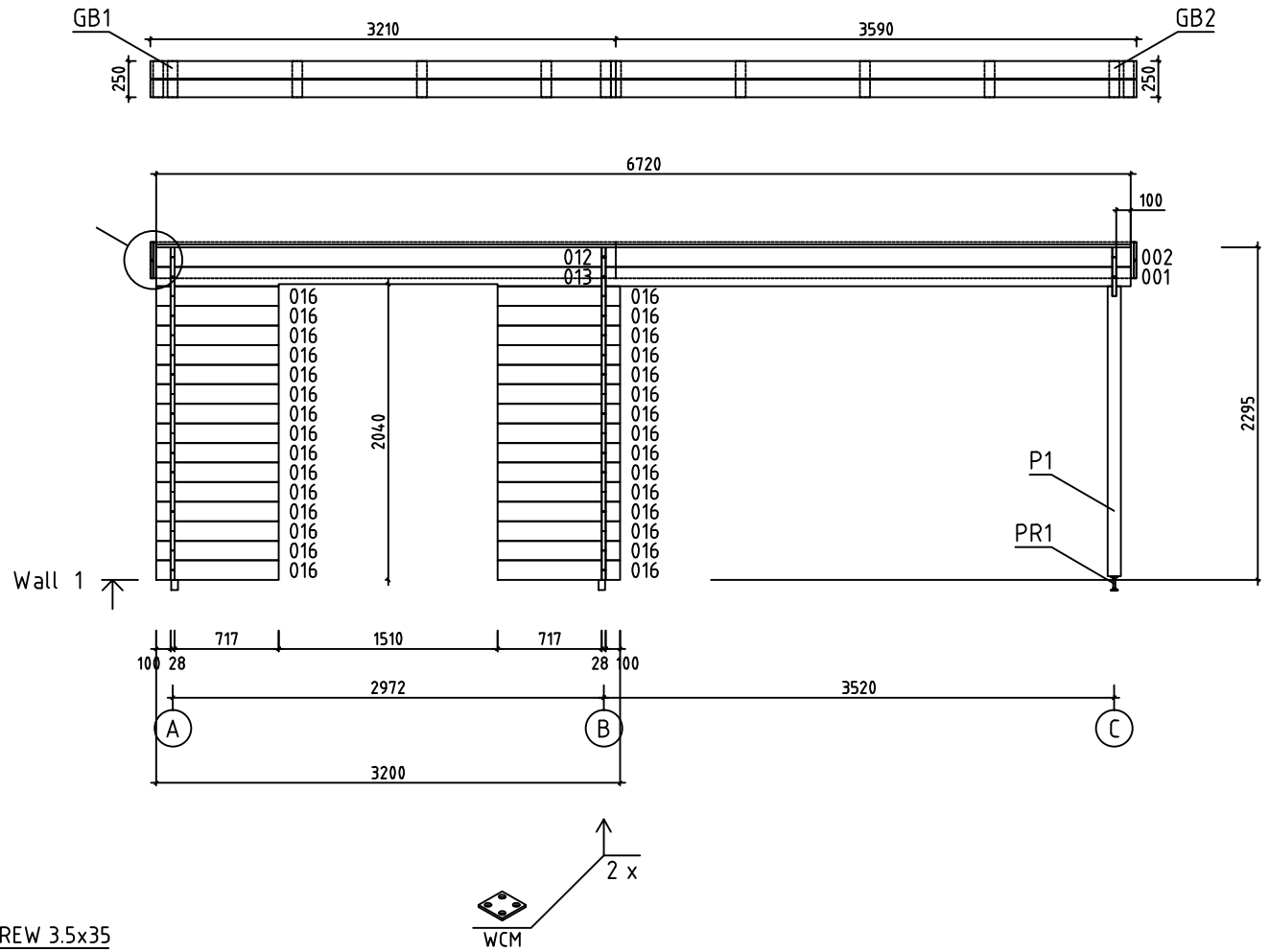

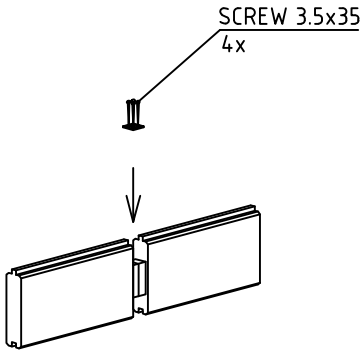

House	Plumeria 28	Sheet	9
Drawing	WALL 1	Scale	1:50
Material	28x135	Date	18.12.2017
Drawer	RP	File	Plumeria 28.dwg

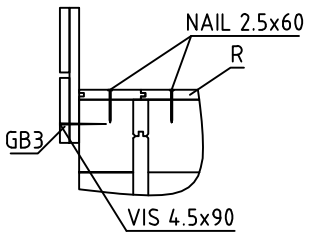

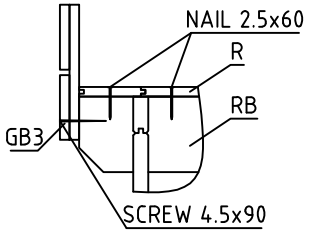

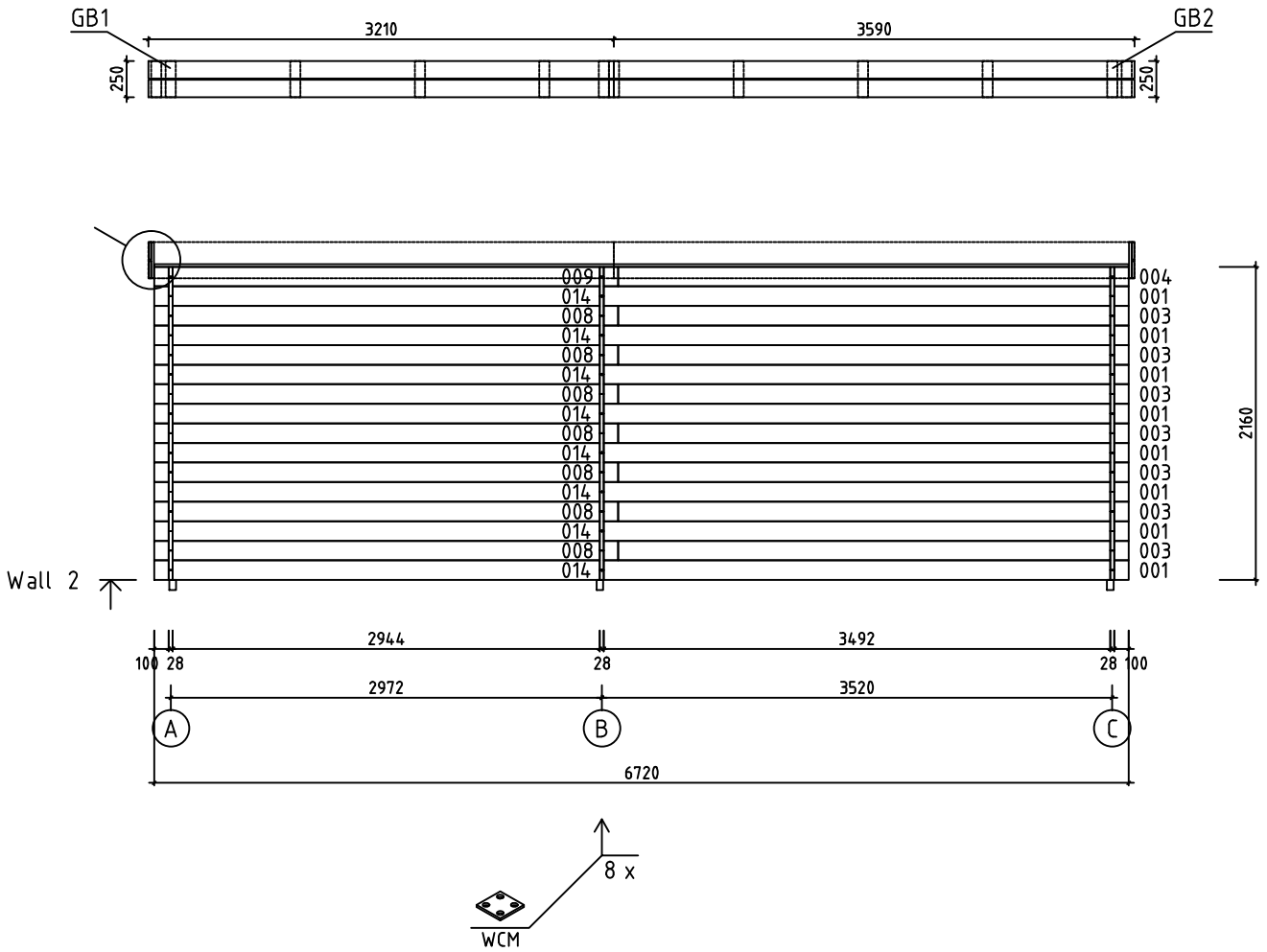

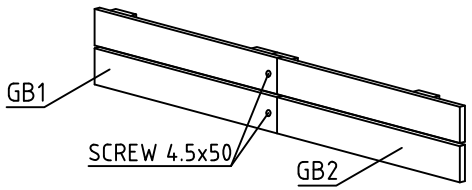

House	Plumeria 28	Sheet	10
Drawing	WALL 2	Scale	1:50
Material	28x135	Date	18.12.2017
Drawer	RP	File	Plumeria 28.dwg

Pos	Specification-Bestimmung-Spécification	PCS	Profile (mm)	L (mm)
001	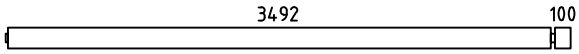	9	28x135	3634
002	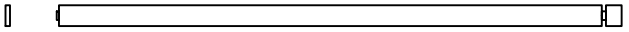	1	28x135	3634
003	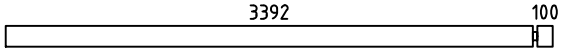	7	28x135	3520
004	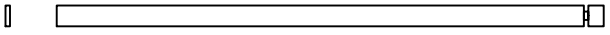	1	28x135	3520
008	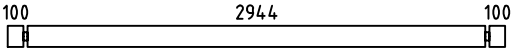	35	28x135	3200
009	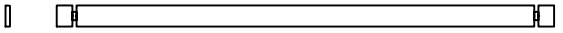	1	28x135	3200
010	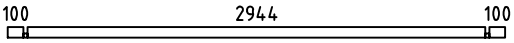	2	28x68	3200
011	SPARE BEAM-ERZATZBOHLE-MADRIER DE RÉSERVE 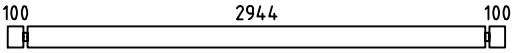	1	28x135	3200
012	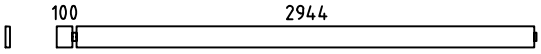	1	28x135	3086
013	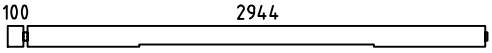	1	28x135	3086
014	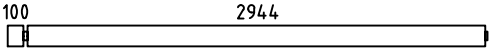	8	28x135	3086
016	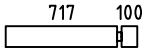	30	28x135	845
017		1	28x68	328
018		14	28x135	328
WA-1 WB-1	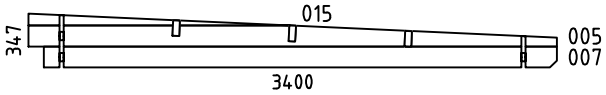	2	28x347	3400
WC-1	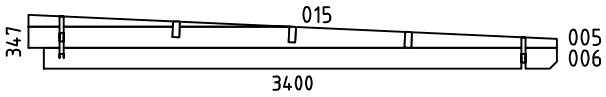	1	28x347	3400
HB	HIT BLOCK-SCHLAGHÖLZER-MADRIERS D´ASSEMBLAGE 	2	28x135	300
FBI4	FLOORBEAMS-FUSSBODENBALKEN-POUTRES DE FONDATION IMPRÉGNÉS IMM	1	45x70	3475
FBI1	FLOORBEAMS-FUSSBODENBALKEN-POUTRES DE FONDATION IMPRÉGNÉS IMM	2	45x70	2990
FBI3	FLOORBEAMS-FUSSBODENBALKEN-POUTRES DE FONDATION IMPRÉGNÉS IMM	7	45x70	2900
FBI2	FLOORBEAMS-FUSSBODENBALKEN-POUTRES DE FONDATION IMPRÉGNÉS IMM	1	45x70	220
RB2	ROOFBEAMS-DACHBALKEN-SOLIVES DE PLAFOND 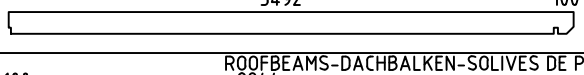	3	43x140	3634
RB1	ROOFBEAMS-DACHBALKEN-SOLIVES DE PLAFOND 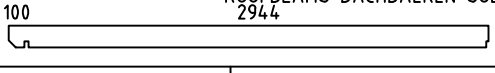	3	43x140	3086

House Plumeria 28	Material	File Plumeria 28.dwg	Sheet 11

Pos	Specification-Bestimmung-Spécification	PCS	Profile (mm)	L (mm)
P1	POST-PFOSTEN-POTEAU 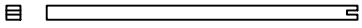	1	90x90	2000
F1	FLOORBOARD-FUSSBODENBRETT-PLANCHER  or-oder-ou	26+1 34+1	18x114 18x88	2940
R1	ROOFBOARD-DACHBRETT-VOLIGES  or-oder-ou	59+1 77+1	18x114 18x88	3400
FF1	FLOOR FILLET-FUSSBODENLEISTE-BAGUETTE DE FINITION DE PLANCHER		18x35	12m
GB1	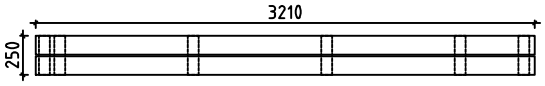	2	36x250	3210
GB2	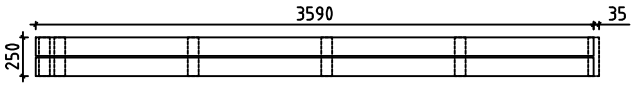	2	36x250	3590+35
GB3	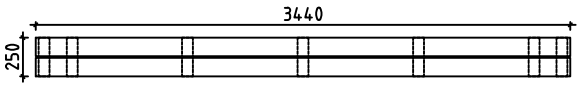	2	36x250	3440
ES1 ES2 ES3	EAVE SLAT-TRAUFENLEISTE-BAGUETTES POUR FIXER LES LATTES SOUS VOLIGES 	2 2 4	30x40	3490 2940 100
SS1	STORM SLAT-STURMLEISTE -BAGUETTE DE TEMPETE TYPE 2	2	18x35	2160
SS2	STORM SLAT-STURMLEISTE -BAGUETTE DE TEMPETE TYPE 2	5	18x35	2030
PR1	POST REGULATOR-PFOSTEN REGLER- PIED MÉTALLIQUE RÉGLABLE POUR POTEAU 	1		
RCM	ROOFBEAMS CONNECTING METAL-DACHBALKEN BEFESTIGUNGSMETALLE -CONNECTEUR MÉTALLIQUE POUR SOLIVES DE PLAFOND 	3	⌀6.0	200
WCM	WALLBEAMS CONNECTING METAL-WANDBOHLEN BEFESTIGUNG -METALLE-PATTE D´ASSEMBLAGE 	10	20	20
	SCREWS-SCHRAUBEN-VISSER FOR-FÜR-POUR SS2	2	M8	90
	SCREWS-SCHRAUBEN-VISSER FOR-FÜR-POUR SS1, SS2	10	M8	70
	WASHER-SCHEIBE-RONDELLE FOR-FÜR-POUR SS1, SS2 	12	M8	
	NUT-NUSS-ÉCROU FOR-FÜR-POUR SS1, SS2 	12	M8	
	NAIL-NAGEL-CLOUS FOR-FÜR-POUR COATING FOR ROOF-BESCHICHTUNG FÜR DACH-REVÉTEMENT DE TOIT	340	⌀2.5	20
	NAIL-NAGEL-CLOUS FOR-FÜR-POUR FF1	30	⌀2.0	40
	NAIL-NAGEL-CLOUS FOR-FÜR-POUR F1, R1	640	⌀2.5	60
	SCREWS-SCHRAUBEN-VIS FOR-FÜR-POUR WCM	40	⌀3.5	35
	SCREWS-SCHRAUBEN-VIS FOR-FÜR-POUR ES1, ES2, ES3, GB1, GB2, PR1	40	⌀4.5	50
	SCREWS-SCHRAUBEN-VIS FOR-FÜR-POUR GB1, GB2, GB3	20	⌀4.5	70

House Plumeria 28	Material	File Plumeria 28.dwg	Sheet 12

Pos	Specification-Bestimmung-Spécification	PCS	Profile (mm)	L (mm)
	SCREWS-SCHRAUBEN-VIS 011, 017, FBI1, FBI2, FBI3, FBI4 FOR-FÜR-POUR GB1, GB2, GB3 	60	ϕ4.5	90
	SCREWS-SCHRAUBEN-VIS FOR-FÜR-POUR WA-1, WB-1, WC-1, RB1, RB2 	30	ϕ6.0	160
	COATING FOR ROOF-BESCHICHTUNG FÜR DACH-REVÉTEMENT DE TOIT 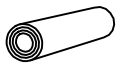	2,0	R = 15m	
	DOUBLEDOOR-DOPPELTÜR-DOUBLE PORTE (right-rechts-droit) AST_PL P	1	1500	1990
	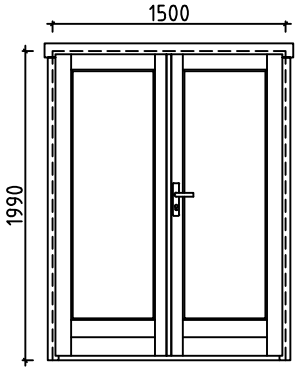 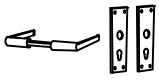	1		
		1		
		1		
		6		

House Plumeria 28	Material	File Plumeria 28.dwg	Sheet 13

#001	1,2	3634	9
#002	1	3634	1
#003	2	3520	7
#004	2	3520	1
#005	A,B,C	3400	3
#006	C	3300	1
#007	A,B	3300	2
#008	2,A,B	3200	35
#009	2	3200	1
#010	A,B	3200	2
#011		3200	1
#012	1	3086	1
#013	1	3086	1
#014	2	3086	8
#015	A,B,C	1686	3
#016	1	845	30
#017	C	328	1
#018	C	328	14