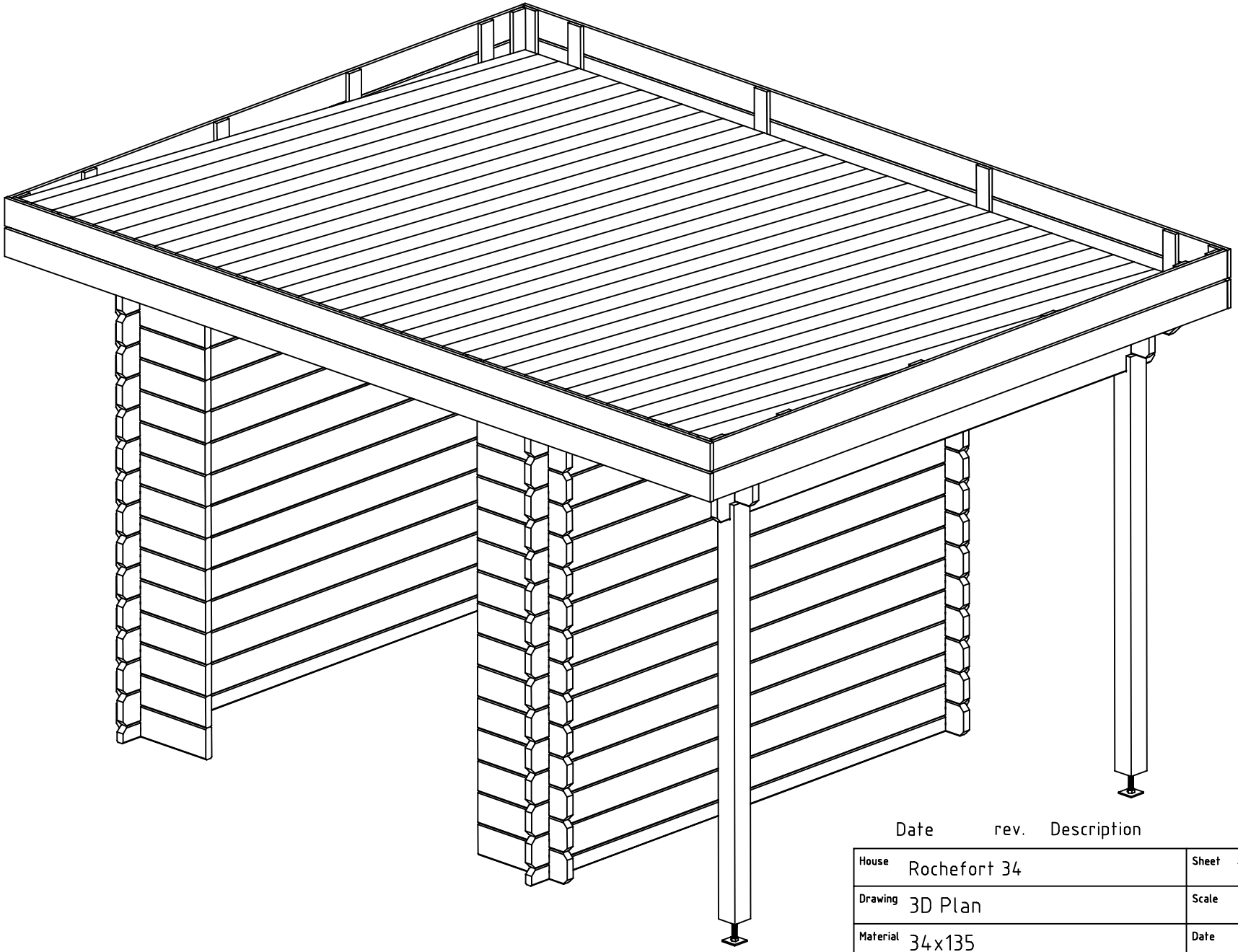

Date rev. Description

House	Rochefort 34	Sheet	1
Drawing	3D Plan	Scale	
Material	34x135	Date	03.07.2019
Drawer	RP	File	Rochefort 34 3D.dwg

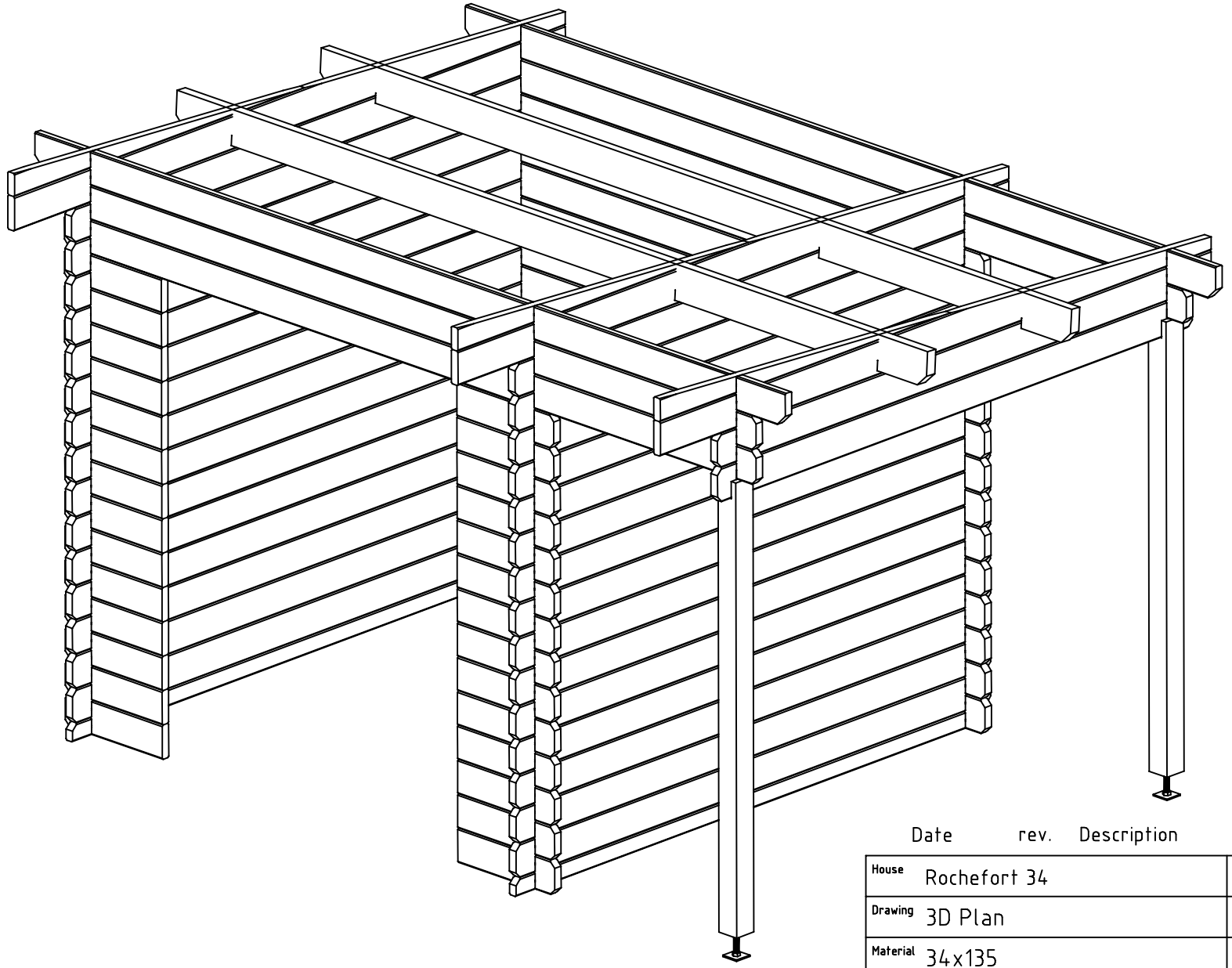

Date rev. Description

House	Rochefort 34	Sheet	2
Drawing	3D Plan	Scale	
Material	34x135	Date	03.07.2019
Drawer	RP	File	Rochefort 34 3D.dwg

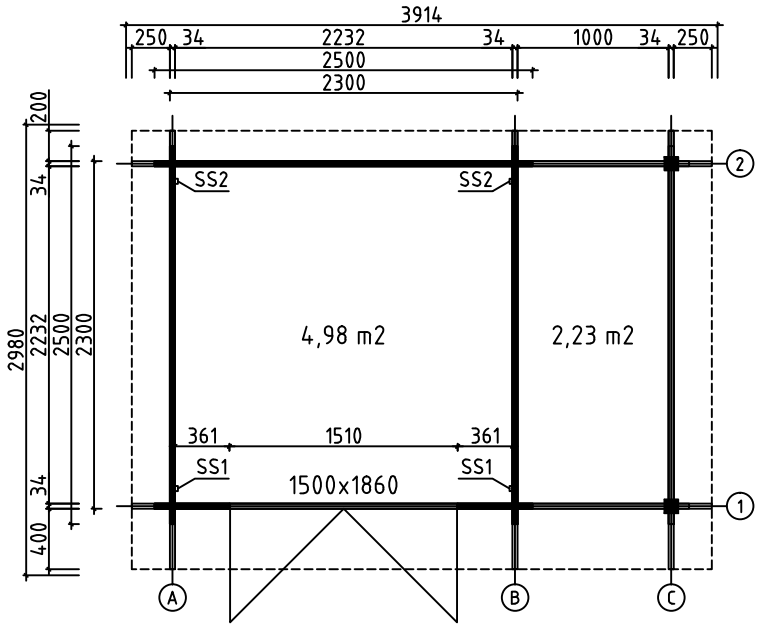

House	Rochefort 34	Sheet	3
Drawing	GROUNDPLAN	Scale	1:50
Material	34x135	Date	03.07.2019
Drawer	RP	File	Rochefort 34.dwg

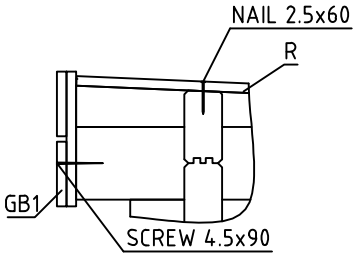

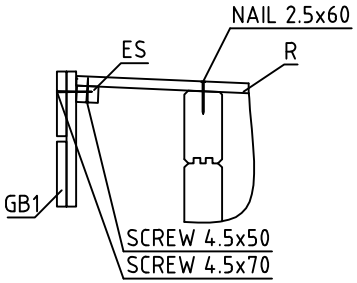

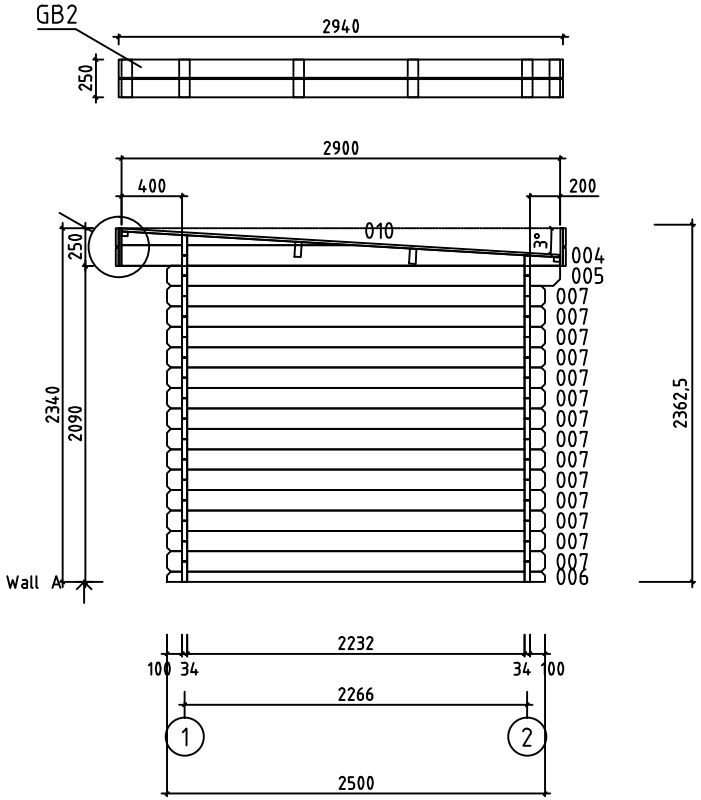

House	Rochefort 34	Sheet	4
Drawing	WALL A	Scale	1:50
Material	34x135	Date	03.07.2019
Drawer	RP	File	Rochefort 34.dwg

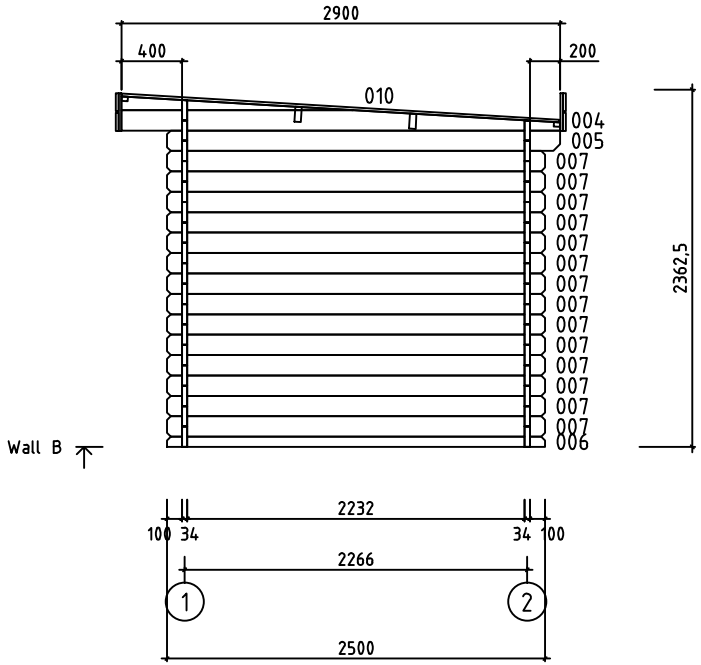

House	Rochefort 34	Sheet	5
Drawing	WALL B	Scale	1:50
Material	34x135	Date	03.07.2019
Drawer	RP	File	Rochefort 34.dwg

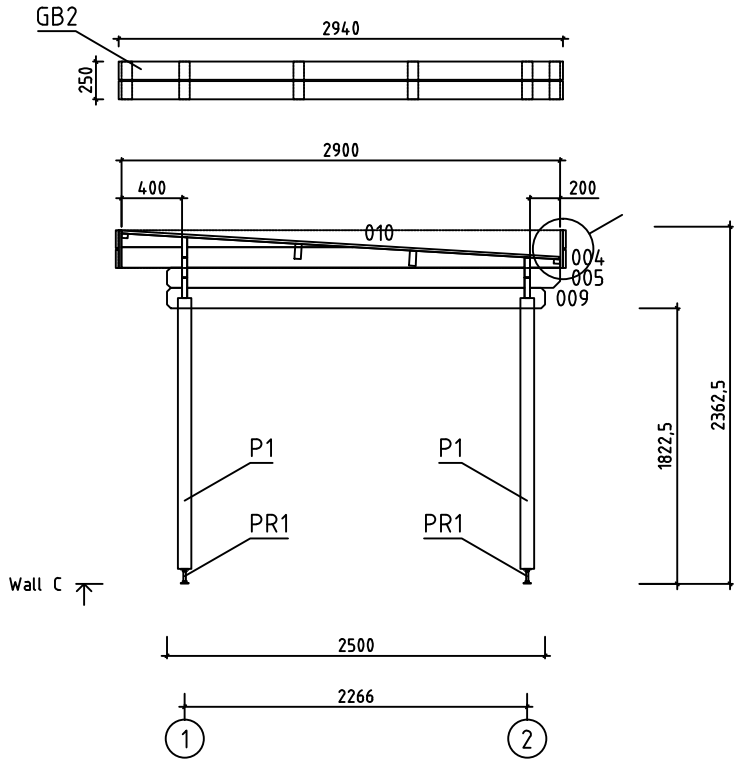

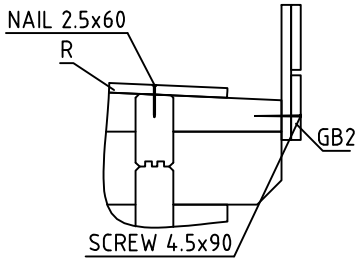

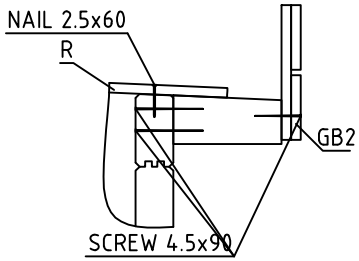

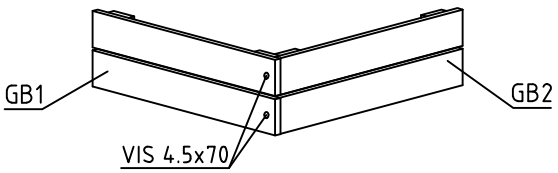

House	Rochefort 34	Sheet	6
Drawing	WALL C	Scale	1:50
Material	34x135	Date	03.07.2019
Drawer	RP	File	Rochefort 34.dwg

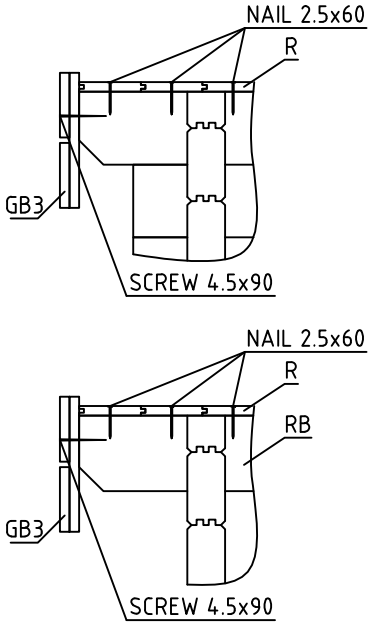

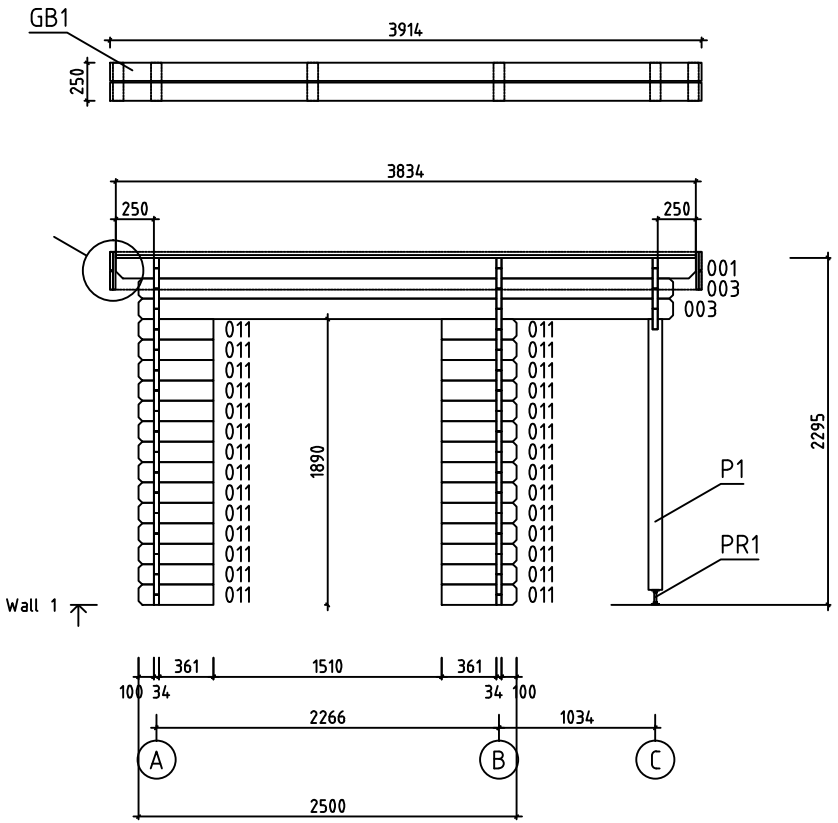

House	Rochefort 34	Sheet	7
Drawing	WALL 1	Scale	1:50
Material	34x135	Date	03.07.2019
Drawer	RP	File	Rochefort 34.dwg

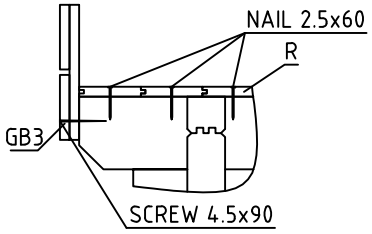

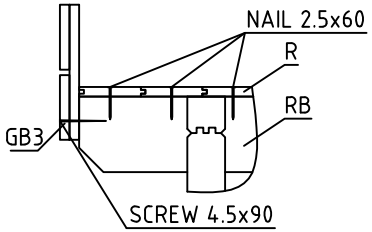

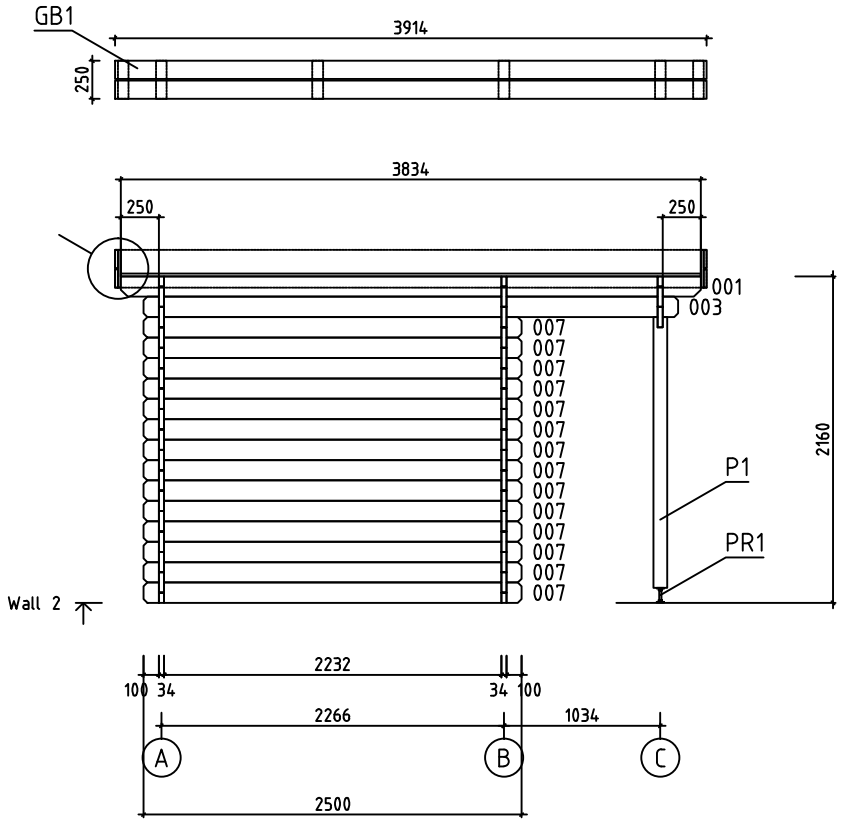

House	Rochefort 34	Sheet	8
Drawing	WALL 2	Scale	1:50
Material	34x135	Date	03.07.2019
Drawer	RP	File	Rochefort 34.dwg

Pos	Specification-Bestimmung-Spécification	PCS	Profile (mm)	L (mm)
001	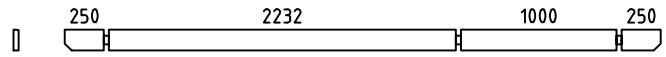	2	34x135	3834
002	INVERSION BEAM-INVERSIONSSTRAHL-MADRIERS D´INVERSION 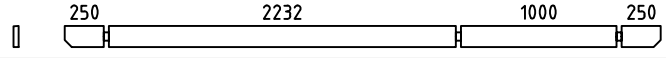	2	34x135	3834
003	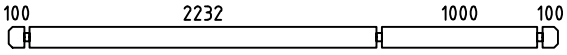	3	34x135	3534
005	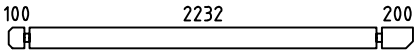	3	34x135	2600
006	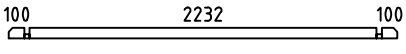	2	34x68	2500
007	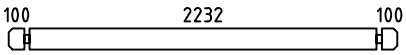	42	34x135	2500
008	SPARE BEAM-ERZATZBOHLE-MADRIER DE RÉSERVE 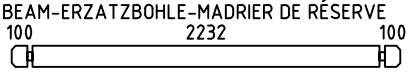	1	34x135	2500
009	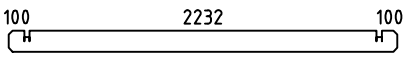	1	34x135	2500
011		28	34x135	495
WA-1 WB-1 WC-1	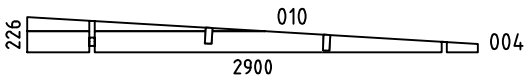	3	34x226	2900
HB	HIT BLOCK-SCHLAGHÖLZER-MADRIERS D´ASSEMBLAGE 	2	34x135	300
P1	POST-PFOSTEN-POTEAU 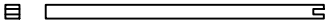	2	90x90	1790
RB1	ROOFBEAMS-DACHBALKEN-SOLIVES DE PLAFOND 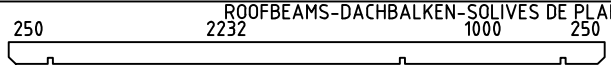	2	43x140	3834
R1	ROOFBOARD-DACHBRETT-VOLIGES or-oder-ou	34+1 44+1	18x114 18x88	2900
GB1	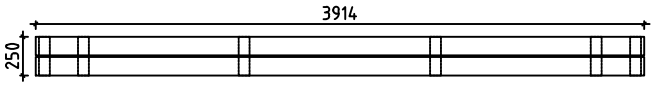	2	36x250	3914
GB2	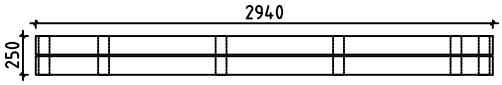	2	36x250	2940
ES1	EAVE SLAT-TRAUFENLEISTE-BAGUETTES POUR FIXER LES LATTES SOUS VOLIGES 	2	30x40	2230
ES2	EAVE SLAT-TRAUFENLEISTE-BAGUETTES POUR FIXER LES LATTES SOUS VOLIGES 	2	30x40	1000
ES3	EAVE SLAT-TRAUFENLEISTE-BAGUETTES POUR FIXER LES LATTES SOUS VOLIGES 	4	30x40	250
SS1	STORM SLAT-STURMLEISTE -BAGUETTE DE TEMPETE TYPE 2	2	18x35	2130
SS2	STORM SLAT-STURMLEISTE -BAGUETTE DE TEMPETE TYPE 2	2	18x35	2030
PR1	POST REGULATOR-PFOSTEN REGLER- PIED MÉTALLIQUE RÉGLABLE POUR POTEAU 	2		

House Rochefort 34	Material	File Rochefort 34.dwg	Sheet 9

Pos	Specification-Bestimmung-Spécification	PCS	Profile (mm)	L (mm)
	SCREWS-SCHRAUBEN-VISSER FOR-FÜR-POUR SS1, SS2	8	M8	90
	WASHER-SCHEIBE-RONDELLE FOR-FÜR-POUR SS1, SS2	8	M8	
	NUT-NUSS-ÉCROU FOR-FÜR-POUR SS1, SS2	8	M8	
	NAIL-NAGEL-CLOUS FOR-FÜR-POUR COATING FOR ROOF-BESCHICHTUNG FÜR DACH-REVÉTEMENT DE TOIT	160	ϕ2.5	20
	NAIL-NAGEL-CLOUS FOR-FÜR-POUR R1	180	ϕ2.5	60
	SCREWS-SCHRAUBEN-VIS FOR-FÜR-POUR ES1, ES2, P1, PR1	40	ϕ4.5	50
	SCREWS-SCHRAUBEN-VIS FOR-FÜR-POUR GB1, GB2	20	ϕ4.5	70
	SCREWS-SCHRAUBEN-VIS FOR-FÜR-POUR GB1, GB2	20	ϕ4.5	90
	SCREWS-SCHRAUBEN-VIS FOR-FÜR-POUR WA-1, WB-1, WC-1, RB1	20	ϕ6.0	160
	COATING FOR ROOF-BESCHICHTUNG FÜR DACH-REVÉTEMENT DE TOIT	1,0	R = 15m	
	DOUBLEDOOR-DOPPELTÜR-DOUBLE PORTE (right-rechts-droit) AST__PL P	1	1500	1860
	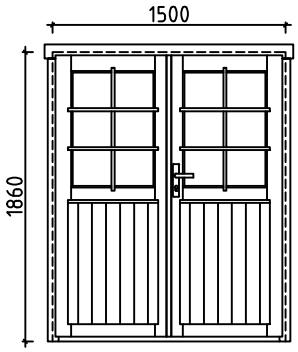	1		
		1		
		1		
		6		
		2		

House Rochefort 34	Material	File Rochefort 34.dwg	Sheet 10

#001	1,2	3834	2
#002		3834	2
#003	1,2	3534	3
#004	A,B,C	2900	3
#005	A,B,C	2600	3
#006	A,B	2500	2
#007	2,A,B	2500	42
#008	3	2500	1
#009	C	2500	1
#010	A,B,C	1533	3
#011	1	495	28