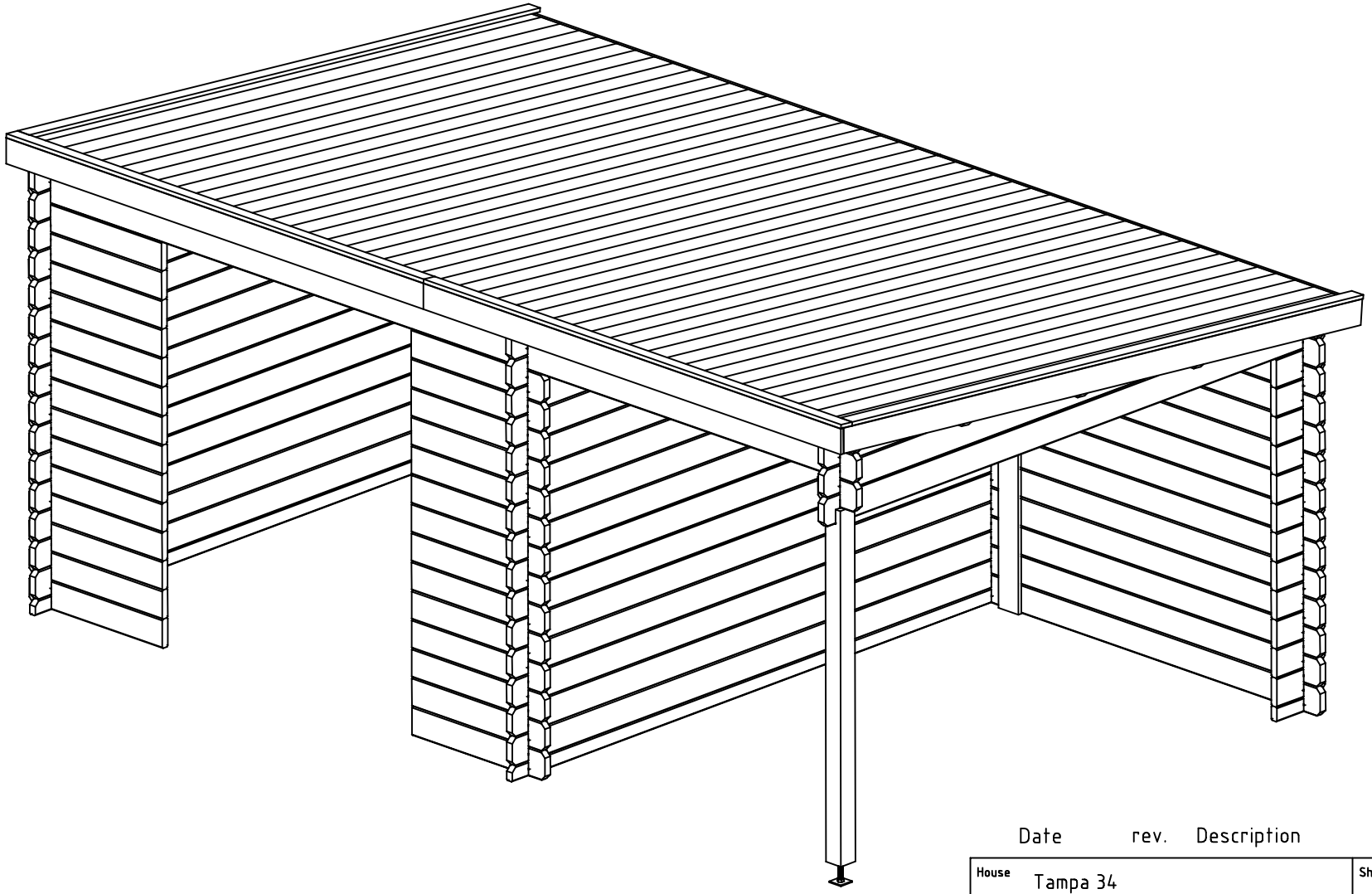

Date rev. Description

House	Tampa 34	Sheet	1
Drawing	3D Plan	Scale	
Material	34x135	Date	30.03.2020
Drawer	RP	File	Tampa 34 3D.dwg

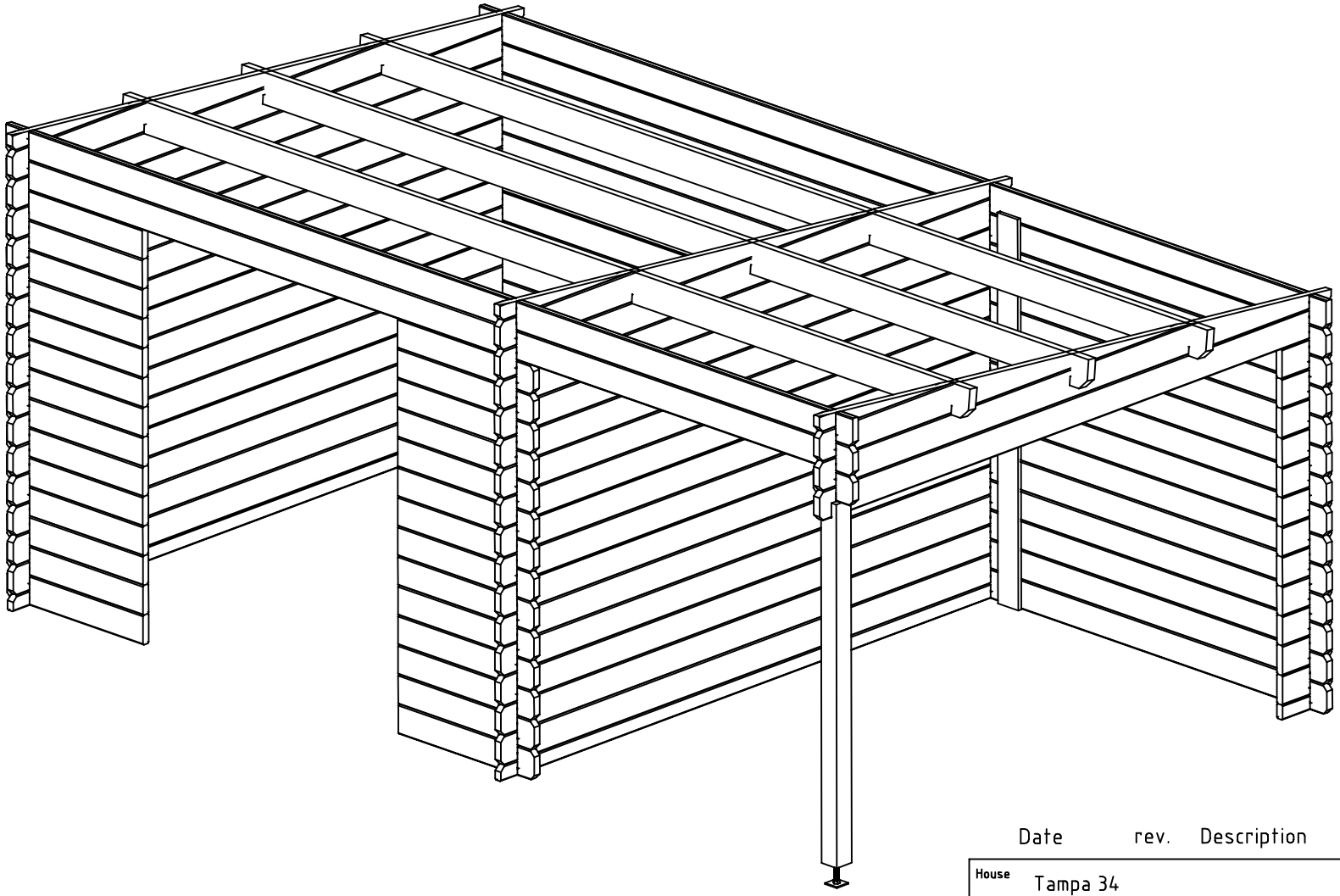

Date rev. Description

House	Tampa 34	Sheet	2
Drawing	3D Plan	Scale	
Material	34x135	Date	30.03.2020
Drawer	RP	File	Tampa 34 3D.dwg

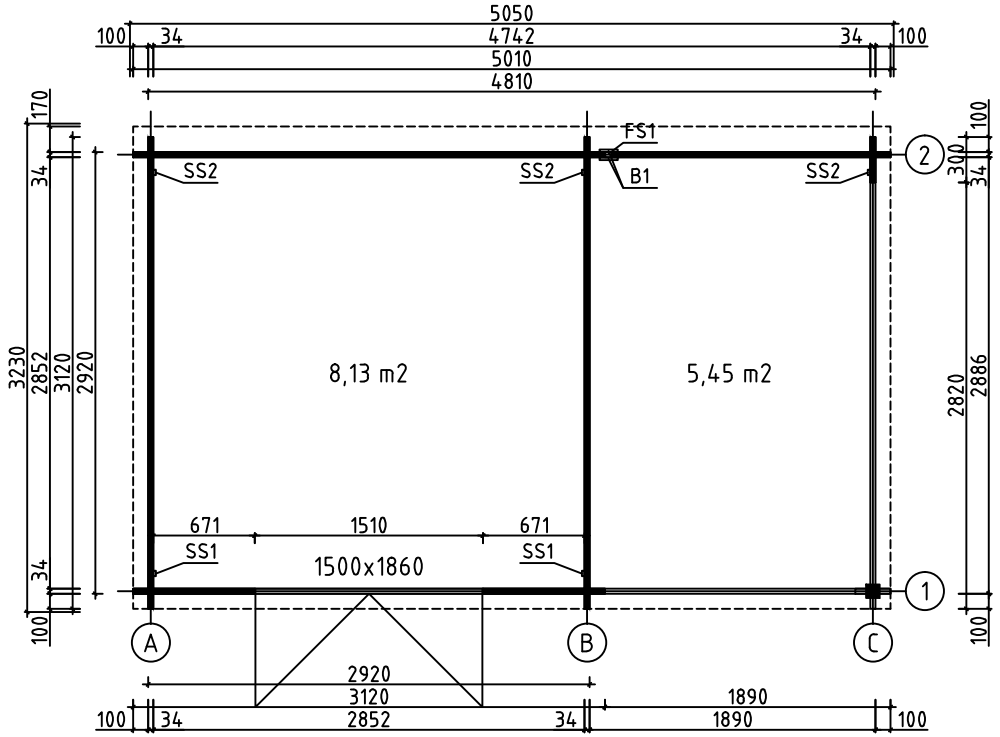

House	Tampa 34	Sheet	3
Drawing	GROUNDPLAN	Scale	1:50
Material	34x135	Date	30.03.2020
Drawer	RP	File	Tampa 34.dwg

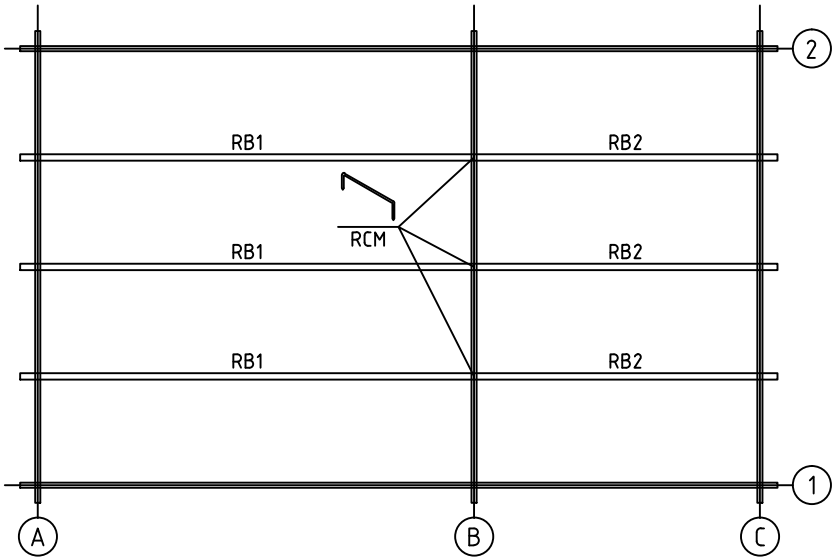

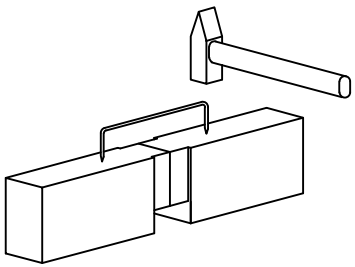

House	Tampa 34	Sheet	4
Drawing	ROOFBEAMS	Scale	1:50
Material	43x140	Date	30.03.2020
Drawer	RP	File	Tampa 34.dwg

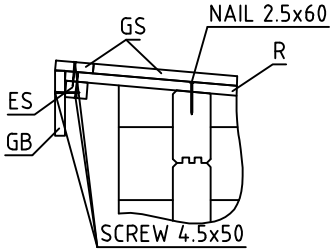

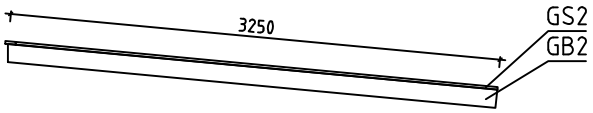

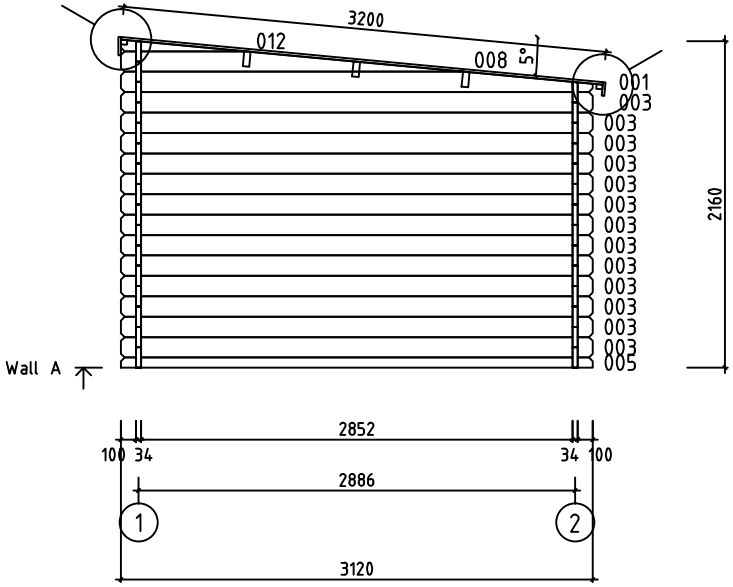

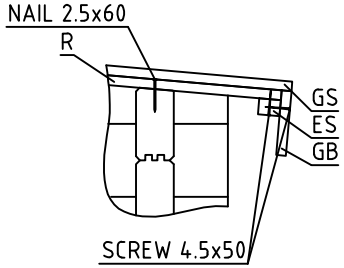

House	Tampa 34	Sheet	5
Drawing	WALL A	Scale	1:50
Material	34x135	Date	30.03.2020
Drawer	RP	File	Tampa 34.dwg

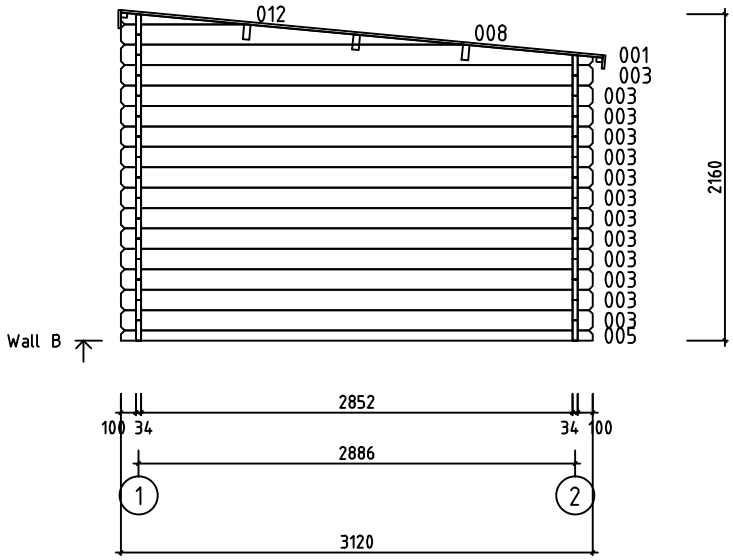

House	Tampa 34	Sheet	6
Drawing	WALL B	Scale	1:50
Material	34x135	Date	30.03.2020
Drawer	RP	File	Tampa 34.dwg

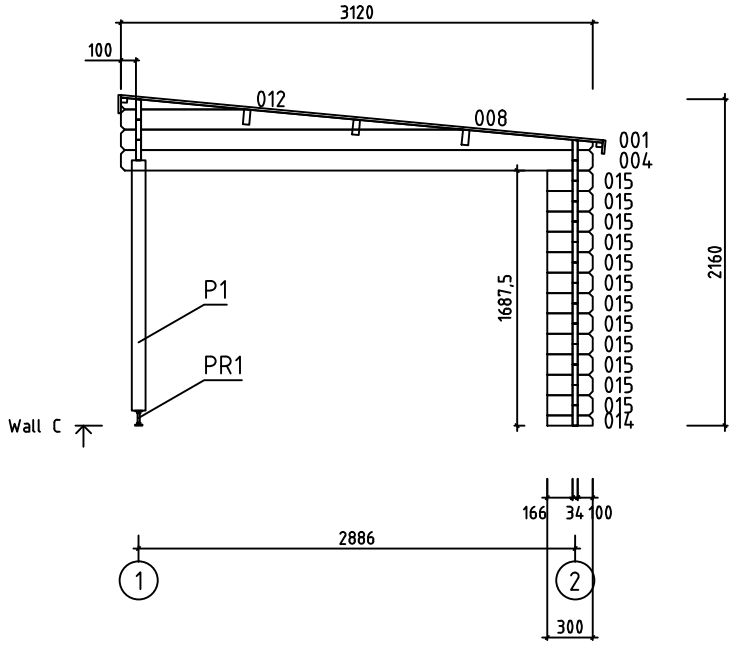

House	Tampa 34	Sheet	7
Drawing	WALL C	Scale	1:50
Material	34x135	Date	30.03.2020
Drawer	RP	File	Tampa 34.dwg

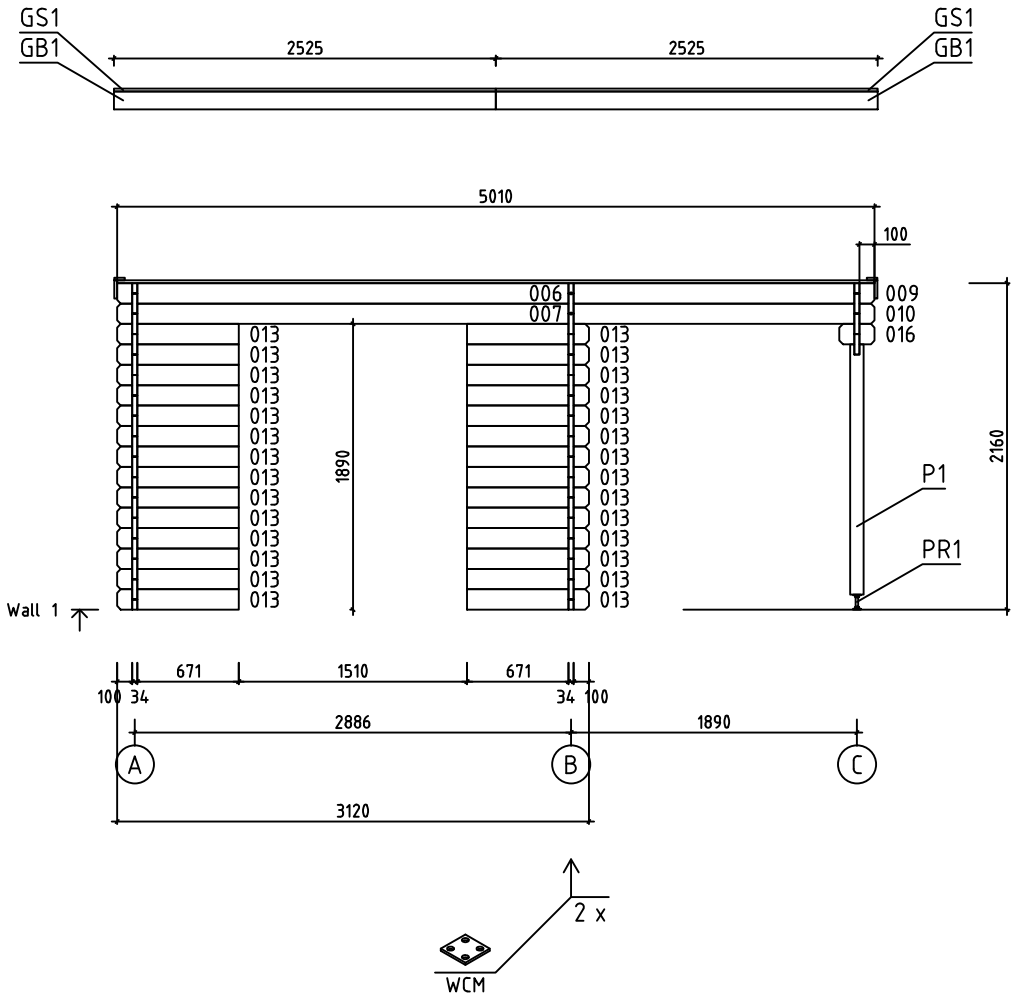

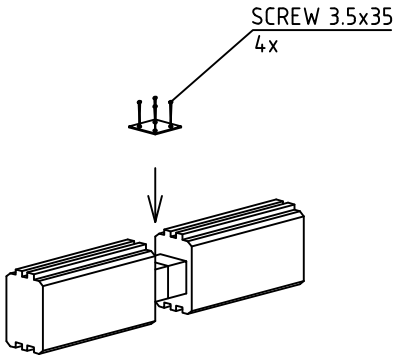

House	Tampa 34	Sheet	8
Drawing	WALL 1	Scale	1:50
Material	34x135	Date	30.03.2020
Drawer	RP	File	Tampa 34.dwg

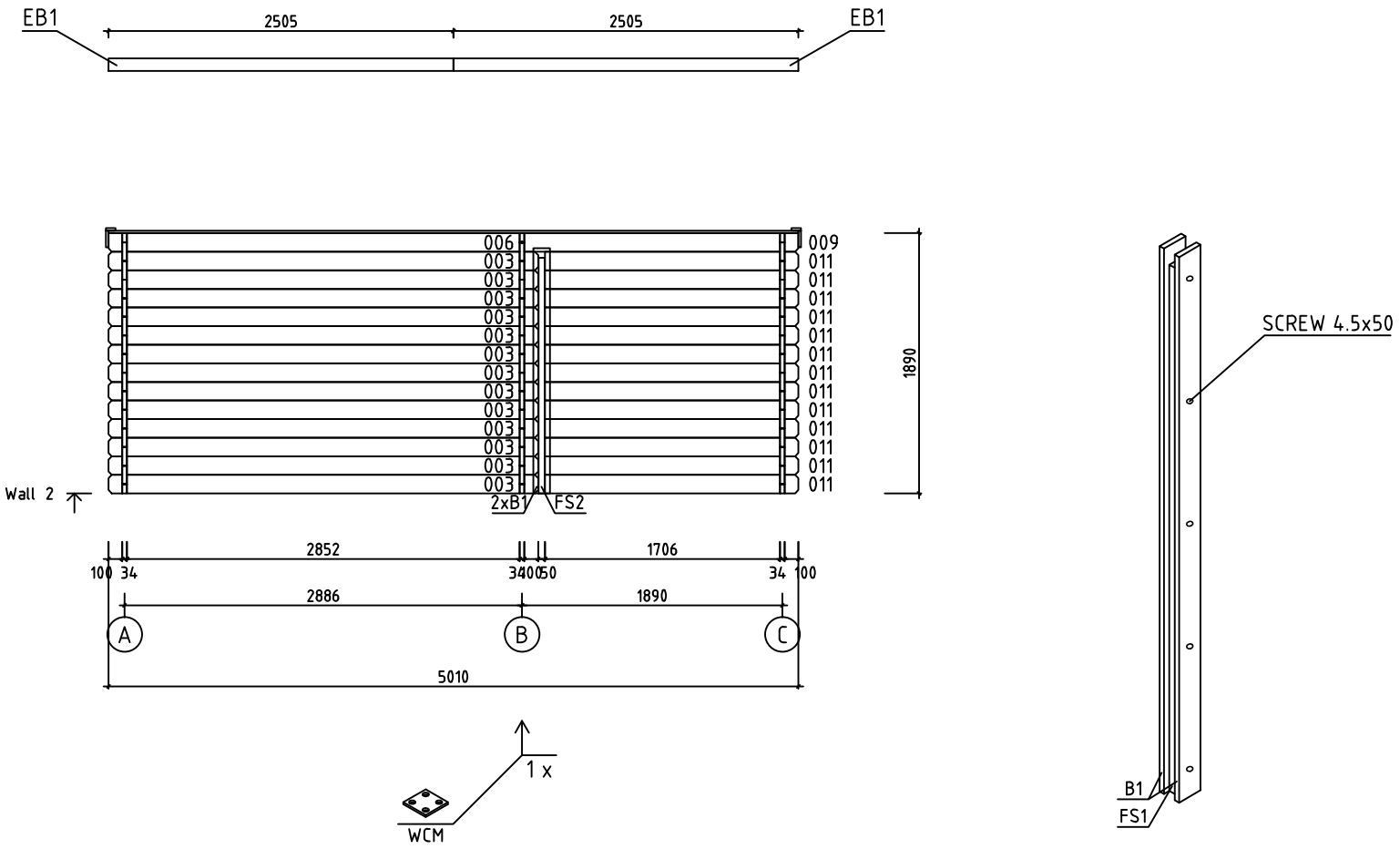

House	Tampa 34	Sheet	9
Drawing	WALL 2	Scale	1:50
Material	34x135	Date	30.03.2020
Drawer	RP	File	Tampa 34.dwg

Pos	Specification-Bestimmung-Spécification	PCS	Profile (mm)	L (mm)
002	SPARE BEAM-ERZATZBOHLE-MADRIER DE RÉSERVE 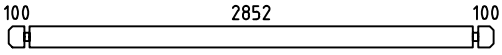	1	34x135	3120
003	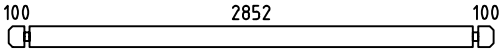	39	34x135	3120
004	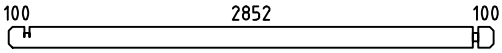	1	34x135	3120
005	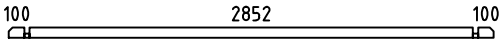	2	34x68	3120
006	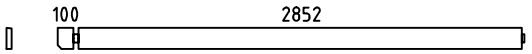	2	34x135	3003
007	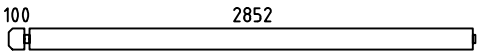	1	34x135	3003
009	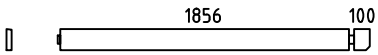	2	34x135	2007
010	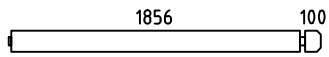	1	34x135	2007
011	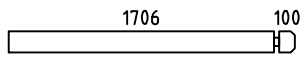	13	34x135	1840
013	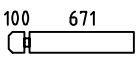	28	34x135	805
014		1	34x68	300
015		12	34x135	300
016		1	34x135	234
WA-1 WB-1 WC-1	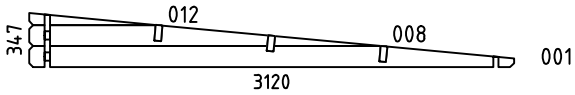	3	34x347	3120
HB	HIT BLOCK-SCHLAGHÖLZER-MADRIERS D´ASSEMBLAGE 	2	34x135	300
FS1	FIXING SLAT-BEFESTIGUNGSLEISTE-BAGUETTES POUR FIXER 	1	45x35	1710
P1	POST-PFOSTEN-POTEAU 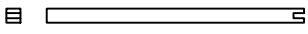	1	90x90	1655
B1	BOARD-BRETT-PLANCHE 	2	18x120	1780
RB1	ROOFBEAMS-DACHBALKEN-SOLIVES DE PLAFOND 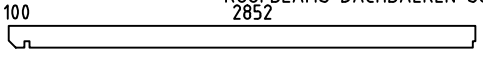	3	43x140	3003
RB2	ROOFBEAMS-DACHBALKEN-SOLIVES DE PLAFOND 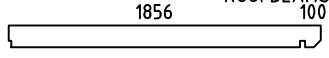	3	43x140	2007
R1	ROOFBOARD-DACHBRETT-VOLIGES  or-oder-ou	44+1 57+1	18x114 18x88	3200
GB1	GABLE BOARD-GIEBELBLENDE-PLANCHE DE RIVE 	2	18x120	2525
GB2	GABLE BOARD-GIEBELBLENDE-PLANCHE DE RIVE 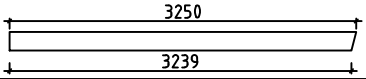	2	18x120	3250
GS1	ROOF FELT FILLET-GIEBELLEISTE-BAGUETTES POUR FIXER LES PLANCHES DE RIVE 	2	18x70	2525

House Tampa 34	Material	File Tampa 34.dwg	Sheet 10

Pos	Specification-Bestimmung-Spécification	PCS	Profile (mm)	L (mm)
GS2	ROOF FELT FILLET-GIEBELLEISTE-BAGUETTES POUR FIXER LES PLANCHES DE RIVE	2	18x70	3250
EB1	EAVE BOARD-TRAUFBRETT-LATTES SOUS VOLIGES	2	18x90	2505
ES1	EAVE SLAT-TRAUFENLEISTE-BAGUETTES POUR FIXER LES LATTES SOUS VOLIGES	2	30x40	2505
SS1	STORM SLAT-STURMLEISTE -BAGUETTE DE TEMPETE TYPE 2	2	18x35	1990
SS2	STORM SLAT-STURMLEISTE -BAGUETTE DE TEMPETE TYPE 2	3	18x35	1790
RCM	ROOFBEAMS CONNECTING METAL-DACHBALKEN BEFESTIGUNGSMETALLE -CONNECTEUR MÉTALLIQUE POUR SOLIVES DE PLAFOND	3	⌀6.0	200
WCM	WALLBEAMS CONNECTING METAL-WANDBOHLEN BEFESTIGUNG -METALLE-PATTE D´ASSEMBLAGE	3	25	25
PR1	POST REGULATOR-PFOSTEN REGLER- PIED MÉTALLIQUE RÉGLABLE POUR POTEAU	1		
	SCREWS-SCHRAUBEN-VISSER FOR-FÜR-POUR SS1, SS2	10	M8	90
	WASHER-SCHEIBE-RONDELLE FOR-FÜR-POUR SS1, SS2	10	M8	
	NUT-NUSS-ÉCROU FOR-FÜR-POUR SS1, SS2	10	M8	
	NAIL-NAGEL-CLOUS FOR-FÜR-POUR COATING FOR ROOF-BESCHICHTUNG FÜR DACH-REVÉTEMENT DE TOIT	250	⌀2.5	20
	NAIL-NAGEL-CLOUS FOR-FÜR-POUR R1	290	⌀2.5	60
	SCREWS-SCHRAUBEN-VIS FOR-FÜR-POUR WCM	12	⌀3.5	35
	SCREWS-SCHRAUBEN-VIS FOR-FÜR-POUR GB1, GB2, GS1, GS2 EB1, ES1, B1, P1, PR1	80	⌀4.5	50
	SCREWS-SCHRAUBEN-VIS FOR-FÜR-POUR RB1, RB2 WA-1, WB-1, WC-1	30	⌀6.0	160
	COATING FOR ROOF-BESCHICHTUNG FÜR DACH-REVÉTEMENT DE TOIT	2,0	R = 10m	
	DOUBLEDOOR-DOPPELTÜR-DOUBLE PORTE (right-rechts-droit) AST__PL P	1	1500	1860
	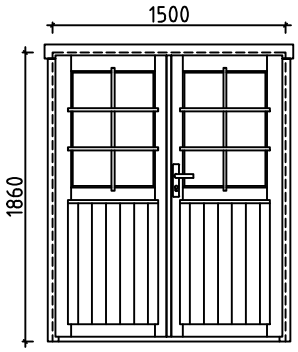	1		
		1		
		1		
		6		
		2		

House Tampa 34	Material	File Tampa 34.dwg	Sheet 11

#001	A,B,C	3120	3
#002		3120	1
#003	2,A,B	3120	39
#004	C	3120	1
#005	A,B	3120	2
#006	1,2	3003	2
#007	1	3003	1
#008	A,B,C	2265	3
#009	1,2	2007	2
#010	1	2007	1
#011	2	1840	13
#012	A,B,C	822	3
#013	1	805	28
#014	C	300	1
#015	C	300	12
#016	1	234	1