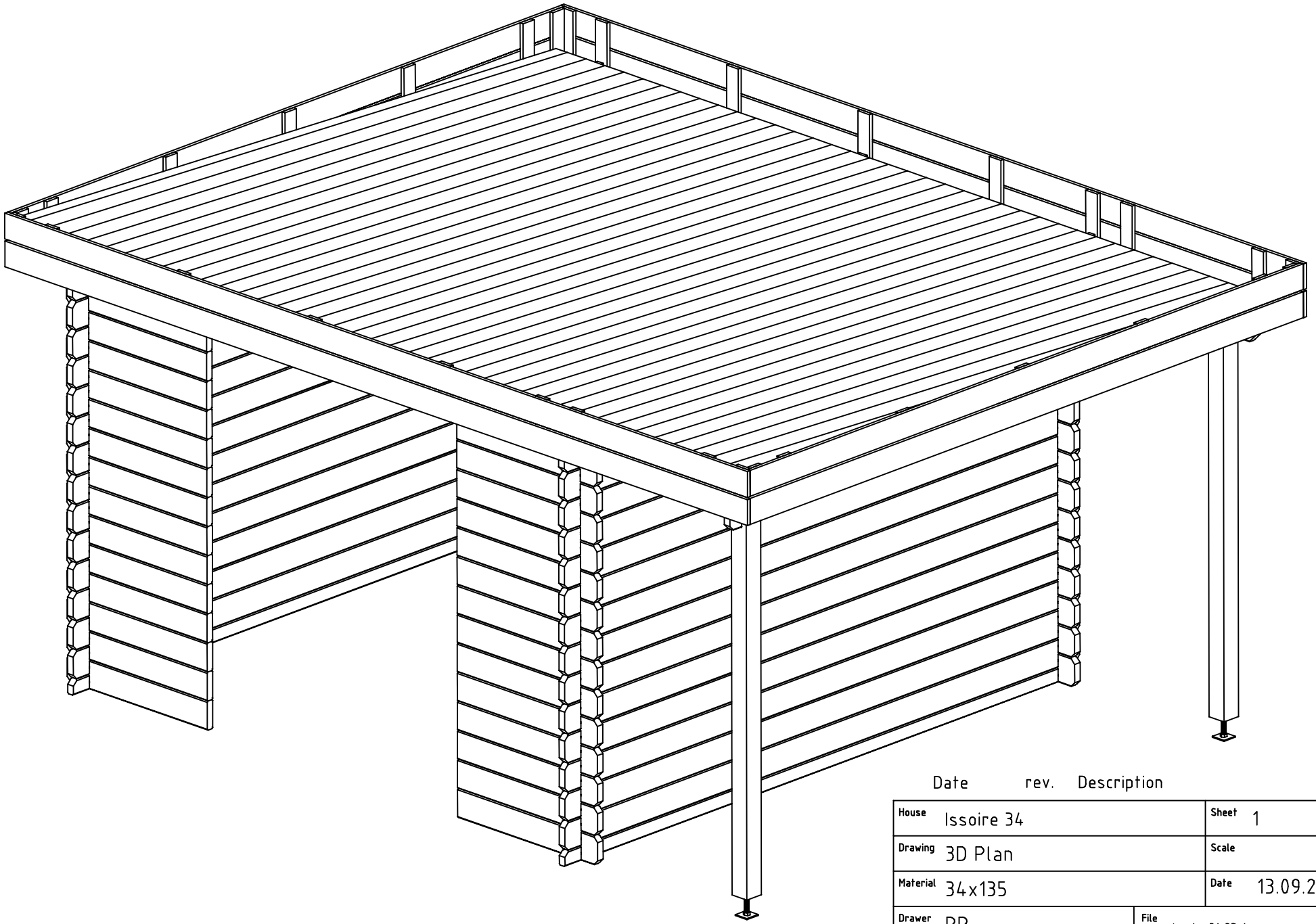

Date rev. Description

House	Issoire 34	Sheet	1
Drawing	3D Plan	Scale	
Material	34x135	Date	13.09.2019
Drawer	RP	File	Issoire 34 3D.dwg

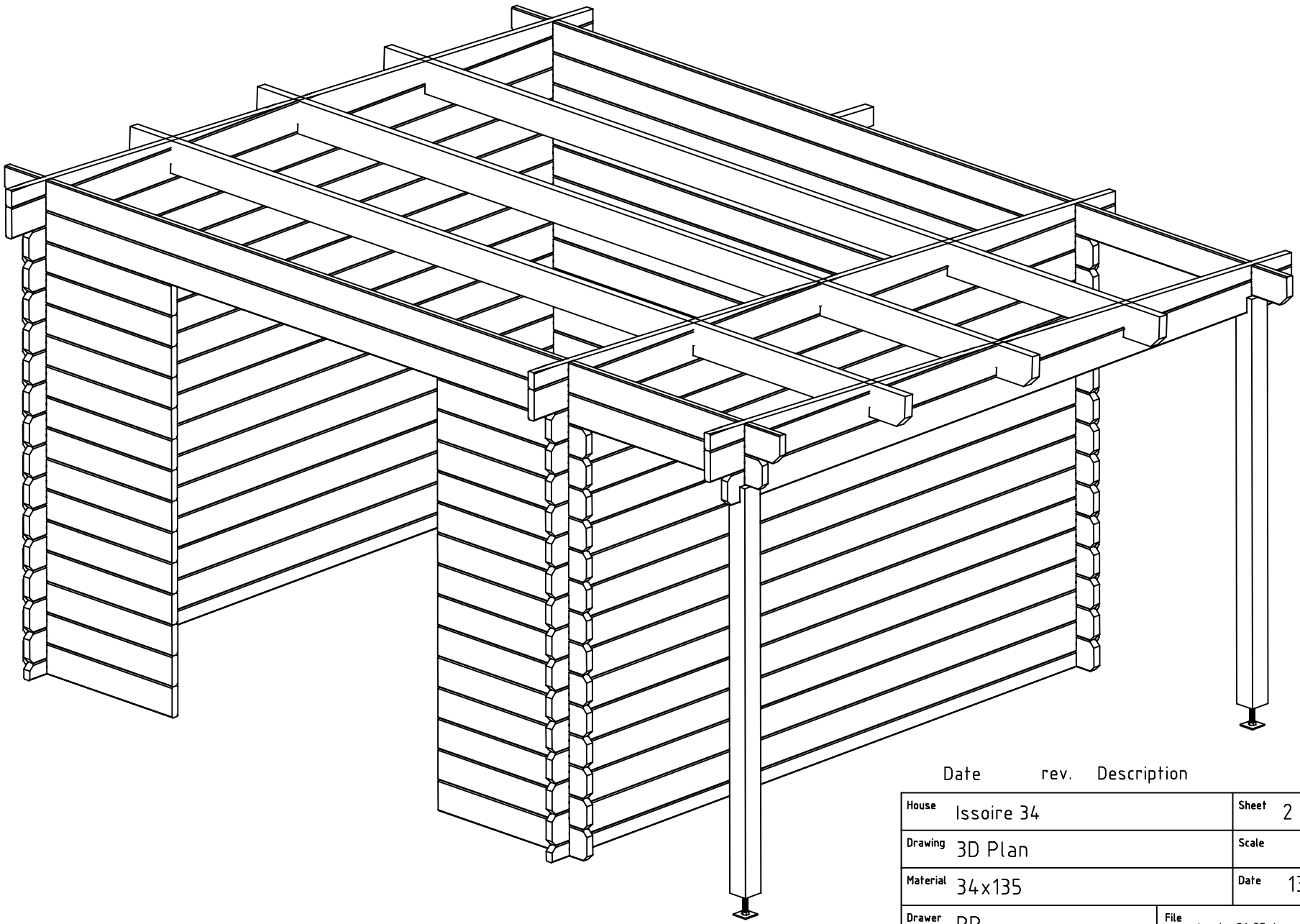

Date rev. Description

House	Issoire 34	Sheet	2
Drawing	3D Plan	Scale	
Material	34x135	Date	13.09.2019
Drawer	RP	File	Issoire 34 3D.dwg

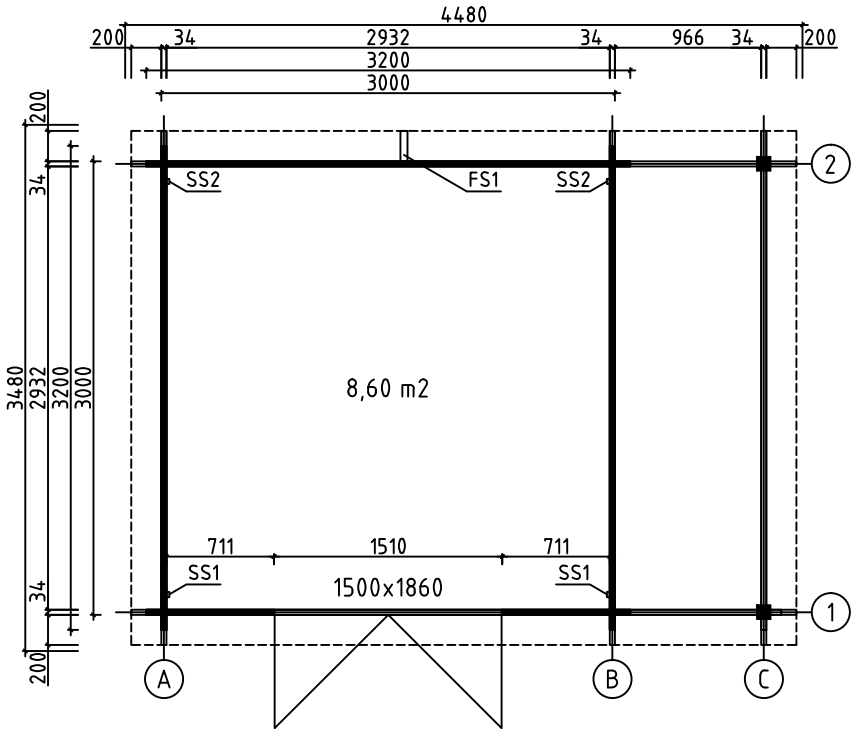

House	Issoire 34	Sheet	3
Drawing	GROUNDPLAN	Scale	1:50
Material	34x135	Date	13.09.2019
Drawer	RP	File	Issoire 34.dwg

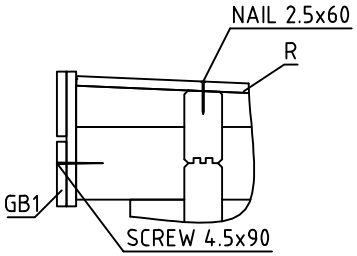

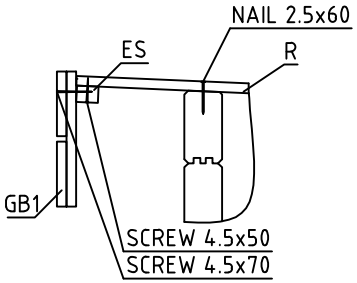

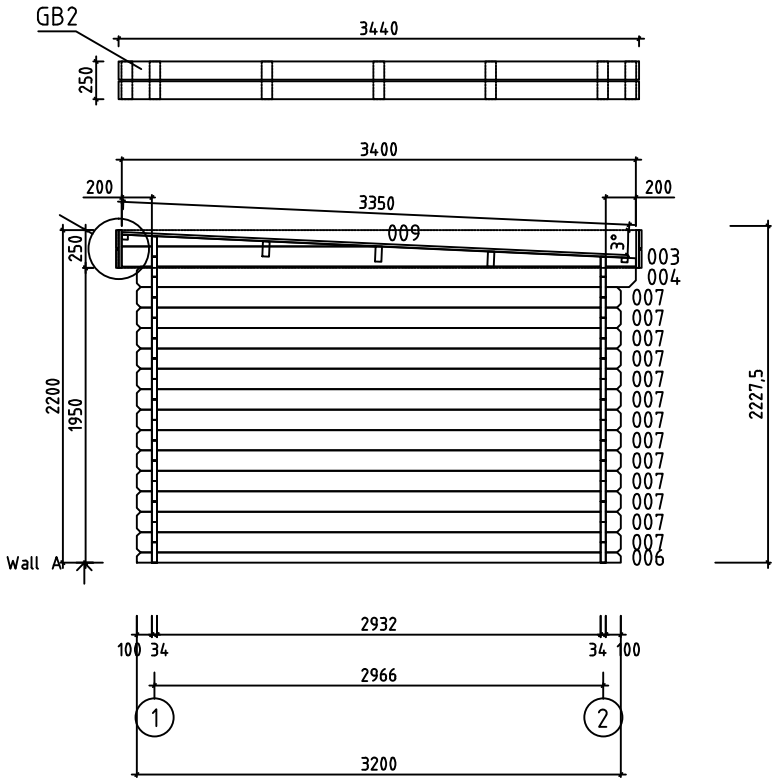

House	Issoire 34	Sheet	4
Drawing	WALL A	Scale	1:50
Material	34x135	Date	13.09.2019
Drawer	RP	File	Issoire 34.dwg

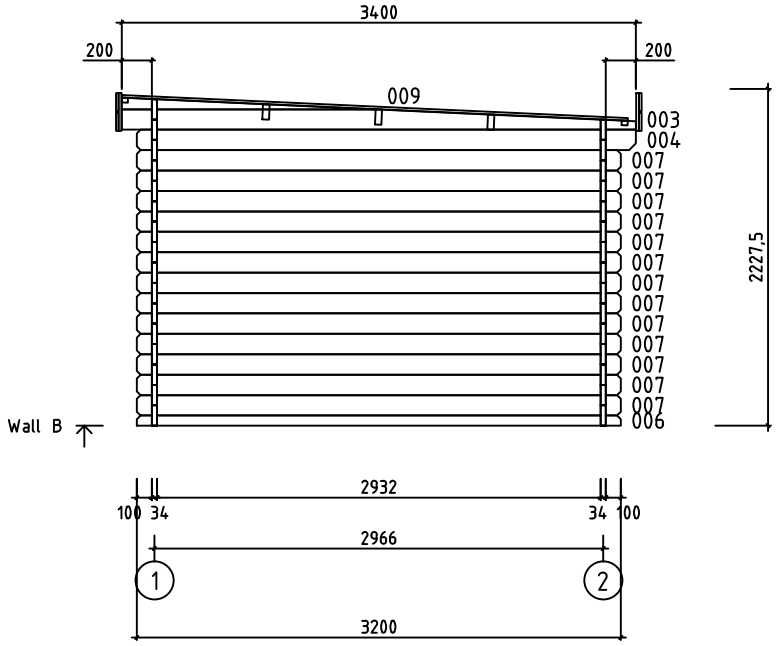

House	Issoire 34	Sheet	5
Drawing	WALL B	Scale	1:50
Material	34x135	Date	13.09.2019
Drawer	RP	File	Issoire 34.dwg

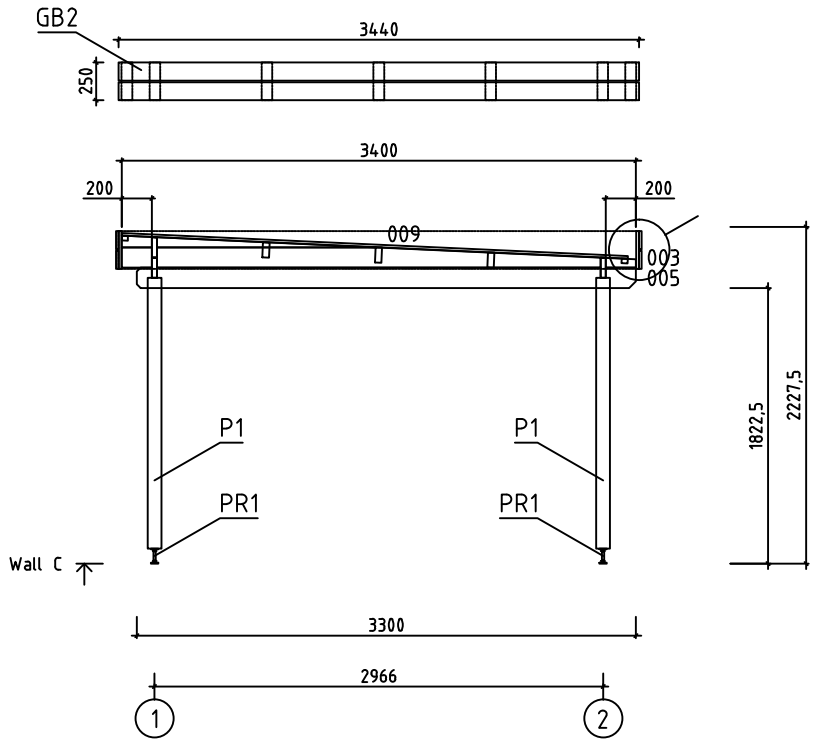

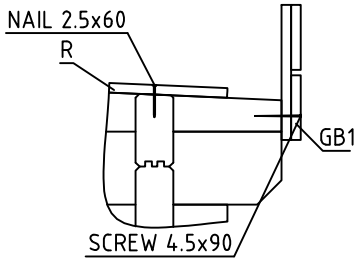

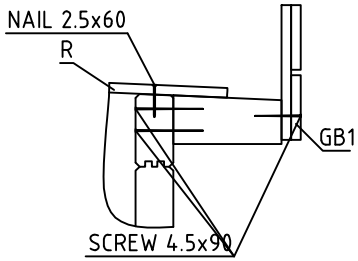

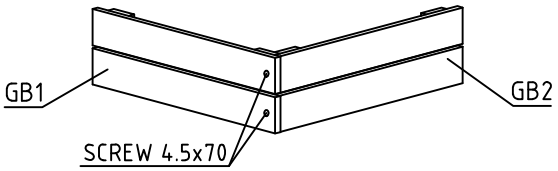

House	Issoire 34	Sheet	6
Drawing	WALL C	Scale	1:50
Material	34x135	Date	13.09.2019
Drawer	RP	File	Issoire 34.dwg

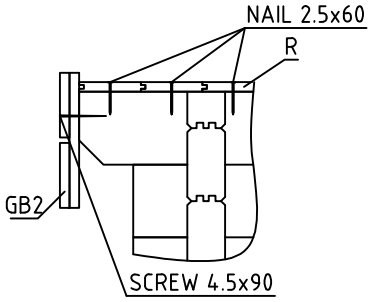

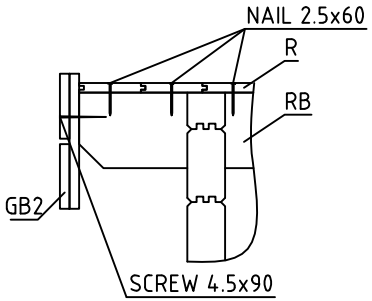

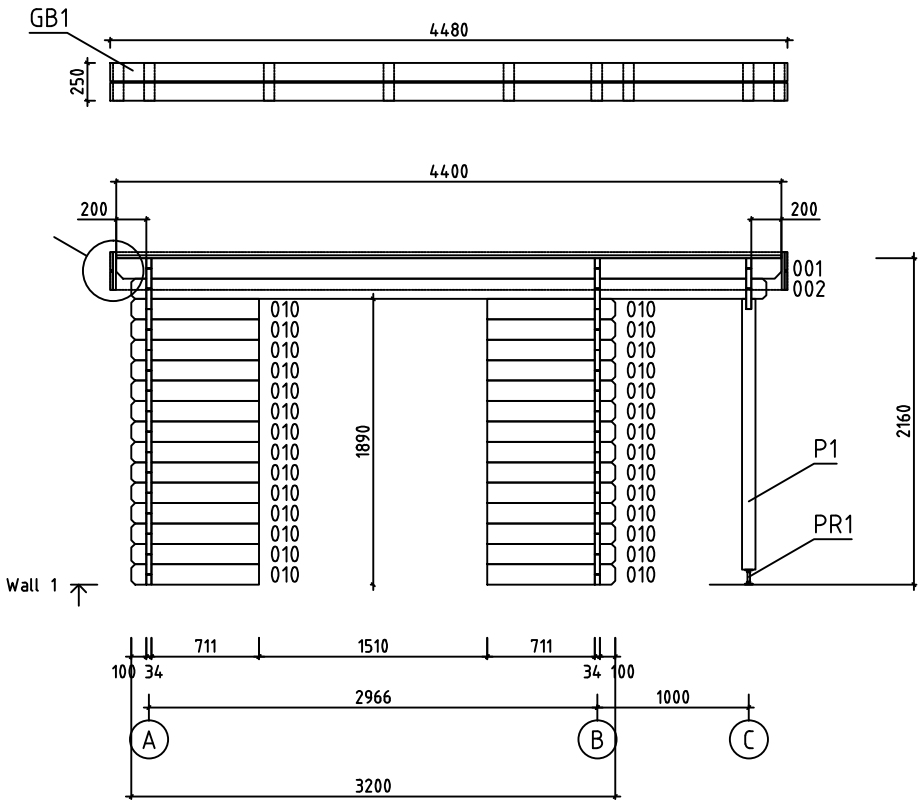

House	Issoire 34	Sheet	7
Drawing	WALL 1	Scale	1:50
Material	34x135	Date	13.09.2019
Drawer	RP	File	Issoire 34.dwg

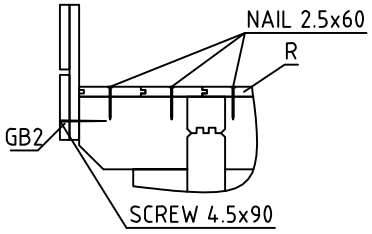

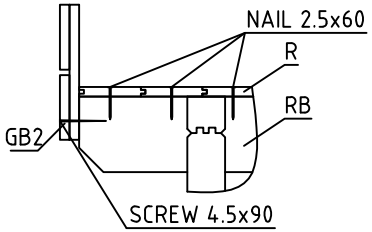

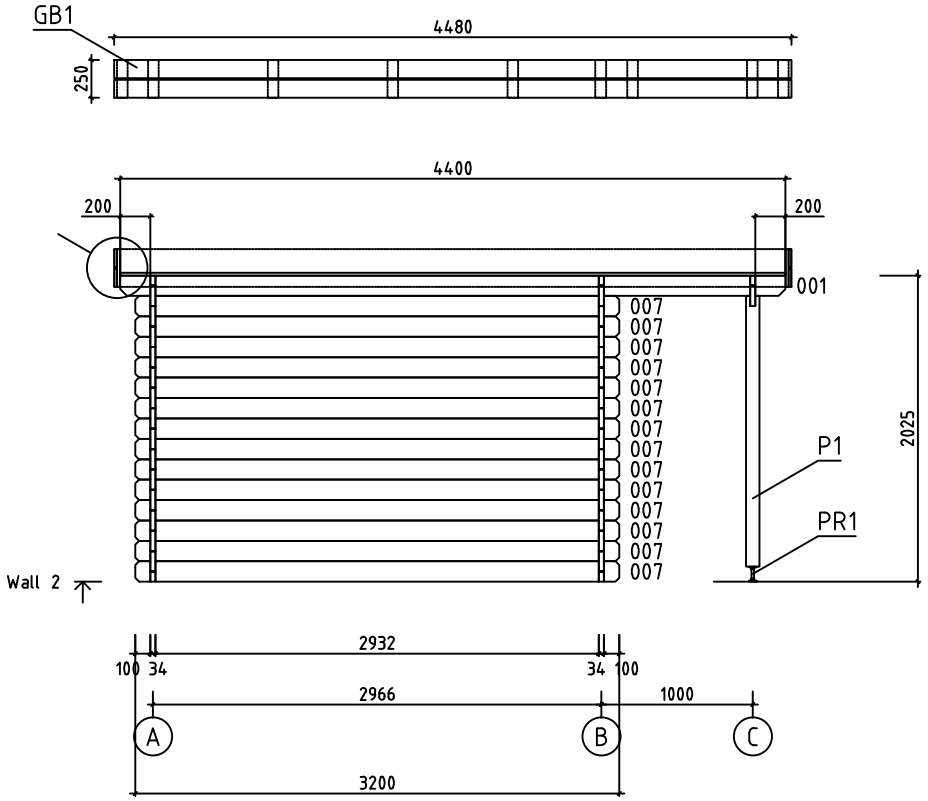

House	Issoire 34	Sheet	8
Drawing	WALL 2	Scale	1:50
Material	34x135	Date	13.09.2019
Drawer	RP	File	Issoire 34.dwg

Pos	Specification-Bestimmung-Spécification	PCS	Profile (mm)	L (mm)
001	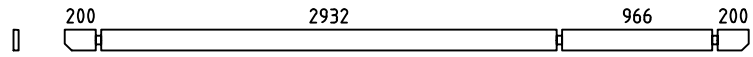	2	34x135	4400
002	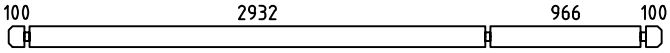	1	34x135	4200
006	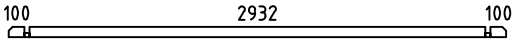	2	34x68	3200
007	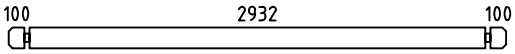	40	34x135	3200
008	SPARE BEAM-ERZATZBOHLE-MADRIER DE RÉSERVE 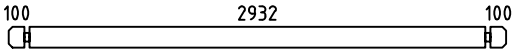	1	34x135	3200
010	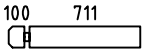	28	34x135	845
WA-1 WB-1	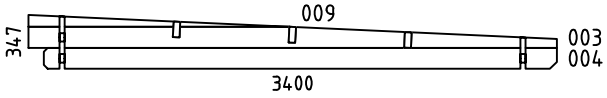	2	34x347	3400
WC-1	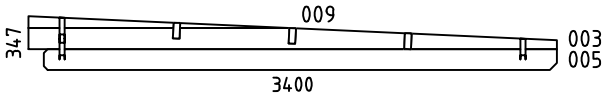	1	34x347	3400
HB	HIT BLOCK-SCHLAGHÖLZER-MADRIERS D´ASSEMBLAGE 	2	34x135	300
FS1	DISTANCE SPACERS FOR GABLE MOULDING-DACHSTÜTZEN-SUPPORTS EXTENSION TOITURE 	1	45x90	200
P1	POST-PFOSTEN-POTEAU 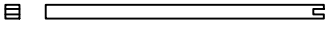	2	90x90	1790
RB1	ROOFBEAMS-DACHBALKEN-SOLIVES DE PLAFOND 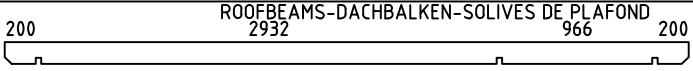	3	43x140	4400
R1	ROOFBOARD-DACHBRETT-VOLIGES or-oder-ou	39+1 51+1	18x114 18x88	3350
GB1	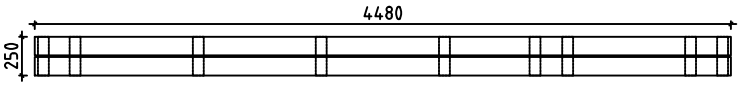	2	36x250	4480
GB2	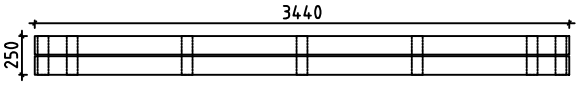	2	36x250	3440
ES1	EAVE SLAT-TRAUFENLEISTE-BAGUETTES POUR FIXER LES LATTES SOUS VOLIGES 	2	30x40	2930
ES2	EAVE SLAT-TRAUFENLEISTE-BAGUETTES POUR FIXER LES LATTES SOUS VOLIGES 	2	30x40	965
ES3	EAVE SLAT-TRAUFENLEISTE-BAGUETTES POUR FIXER LES LATTES SOUS VOLIGES 	4	30x40	200
SS1	STORM SLAT-STURMLEISTE -BAGUETTE DE TEMPETE TYPE 2	2	18x35	2030
SS2	STORM SLAT-STURMLEISTE -BAGUETTE DE TEMPETE TYPE 2	2	18x35	1930
PR1	POST REGULATOR-PFOSTEN REGLER- PIED MÉTALLIQUE RÉGLABLE POUR POTEAU 	2		

House Issoire 34	Material	File Issoire 34.dwg	Sheet 9

Pos	Specification-Bestimmung-Spécification	PCS	Profile (mm)	L (mm)
	SCREWS-SCHRAUBEN-VISSER FOR-FÜR-POUR SS1, SS2	8	M8	90
	WASHER-SCHEIBE-RONDELLE FOR-FÜR-POUR SS1, SS2	8	M8	
	NUT-NUSS-ÉCROU FOR-FÜR-POUR SS1, SS2	8	M8	
	NAIL-NAGEL-CLOUS FOR-FÜR-POUR COATING FOR ROOF-BESCHICHTUNG FÜR DACH-REVÉTEMENT DE TOIT	220	ϕ2.5	20
	NAIL-NAGEL-CLOUS FOR-FÜR-POUR R1	260	ϕ2.5	60
	SCREWS-SCHRAUBEN-VIS FOR-FÜR-POUR ES1, ES2, ES3, P1, PR1	40	ϕ4.5	50
	SCREWS-SCHRAUBEN-VIS FOR-FÜR-POUR GB1, GB2	20	ϕ4.5	70
	SCREWS-SCHRAUBEN-VIS FOR-FÜR-POUR FS1, GB1, GB2	20	ϕ4.5	90
	SCREWS-SCHRAUBEN-VIS FOR-FÜR-POUR WA-1, WB-1, WC-1, RB1	30	ϕ6.0	160
	COATING FOR ROOF-BESCHICHTUNG FÜR DACH-REVÉTEMENT DE TOIT	2,0	R = 10m	
	DOUBLEDOOR-DOPPELTÜR-DOUBLE PORTE (right-rechts-droit) AST_PL P 1500 1860	1	1500	1860
		1		
		1		
		1		
		6		
		2		

House Issoire 34	Material	File Issoire 34.dwg	Sheet 10

#001	1,2	4400	2
#002	1	4200	1
#003	A,B,C	3400	3
#004	A,B	3300	2
#005	C	3300	1
#006	A,B	3200	2
#007	2,A,B	3200	40
#008		3200	1
#009	A,B,C	1683	3
#010	1	845	28