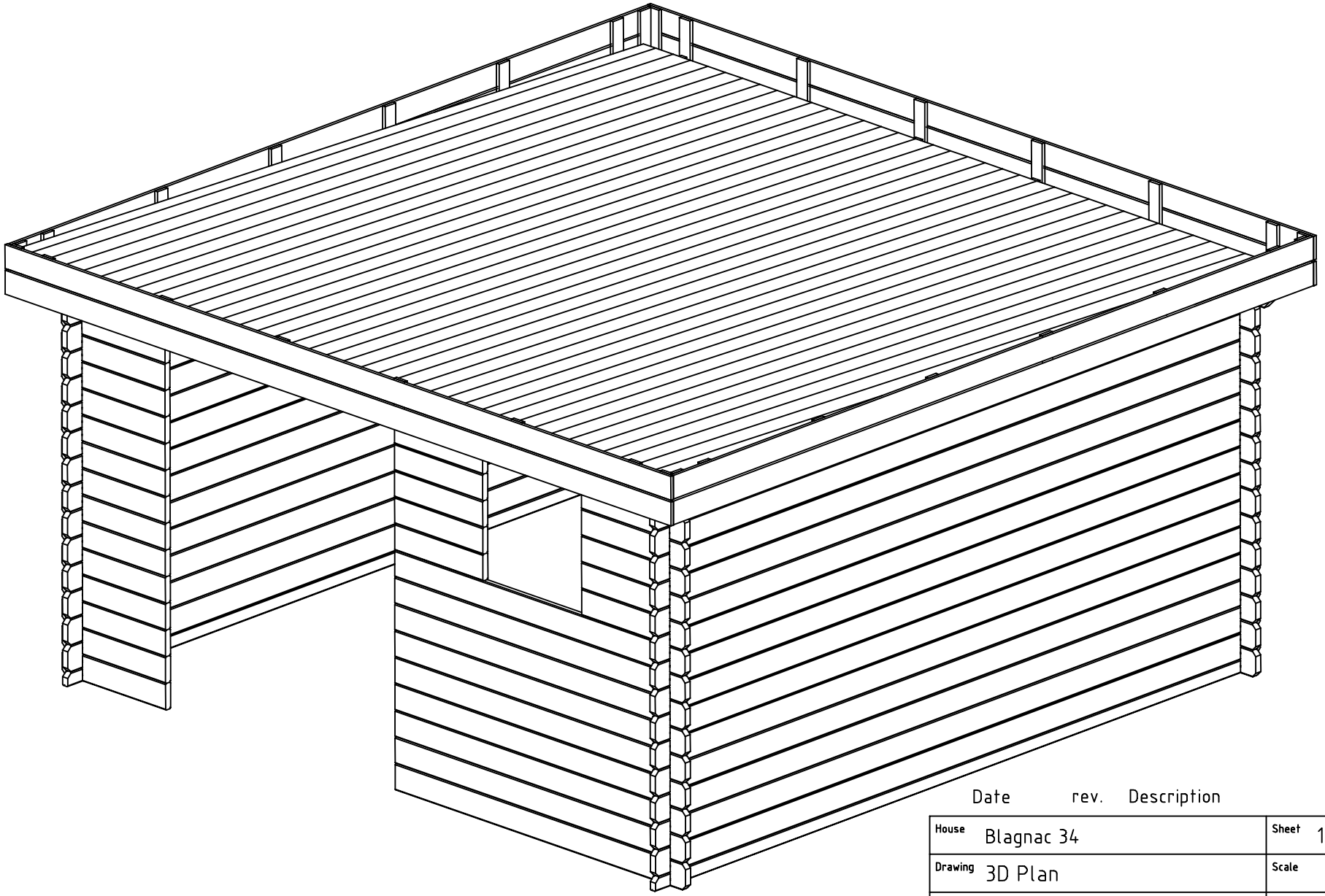

Date rev. Description

House	Blagnac 34	Sheet	1
Drawing	3D Plan	Scale	
Material	34x135	Date	13.09.2019
Drawer	RP	File	Blagnac 34 3D.dwg

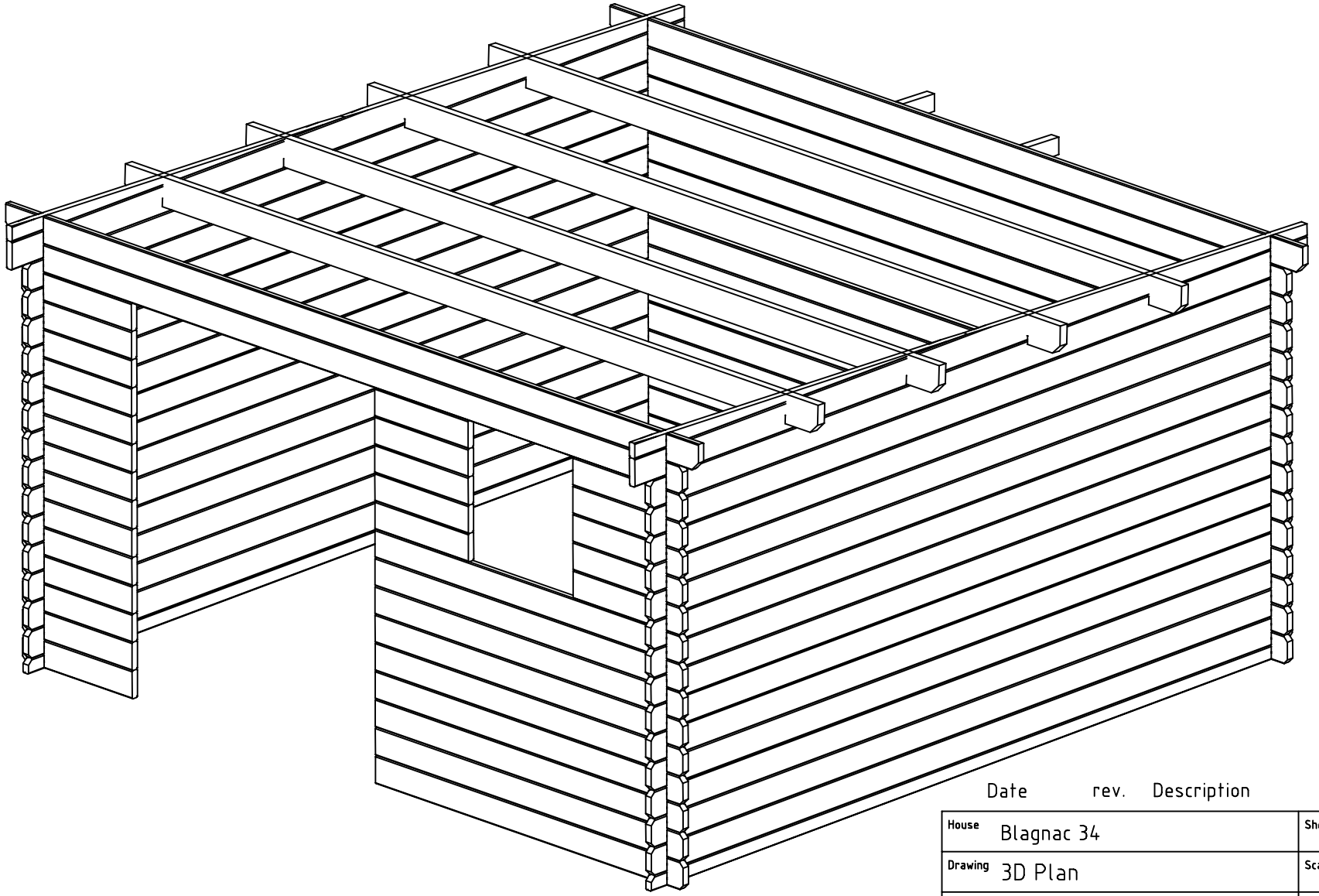

Date rev. Description

House	Blagnac 34	Sheet	2
Drawing	3D Plan	Scale	
Material	34x135	Date	13.09.2019
Drawer	RP	File	Blagnac 34 3D.dwg

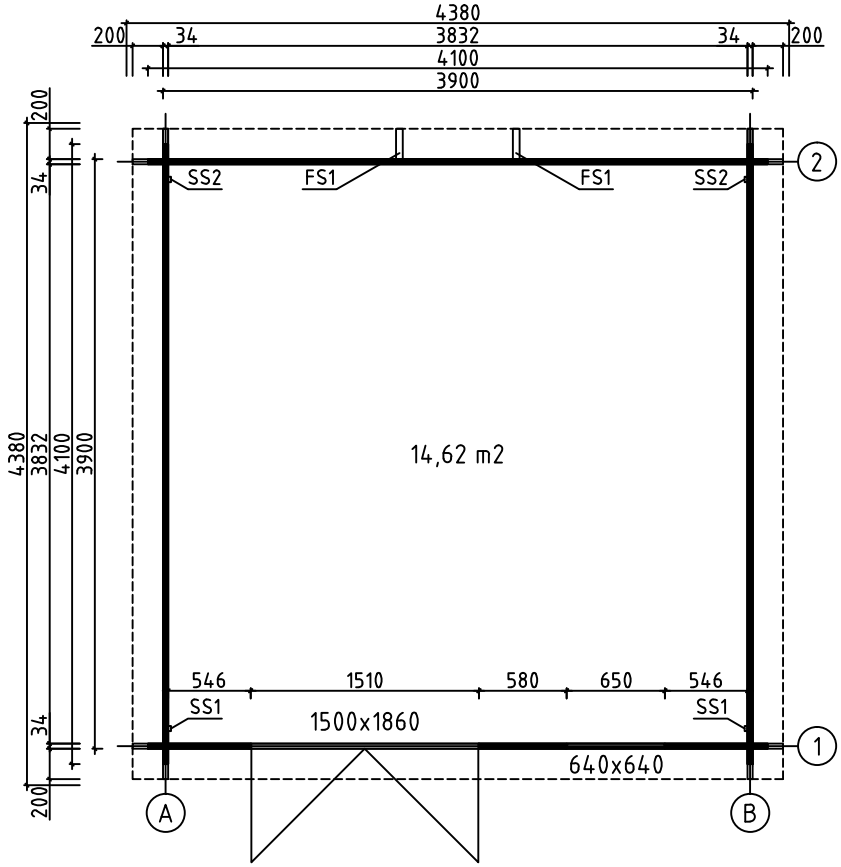

House	Blagnac 34	Sheet	3
Drawing	GROUNDPLAN	Scale	1:50
Material	34x135	Date	13.09.2019
Drawer	RP	File	Blagnac 34.dwg

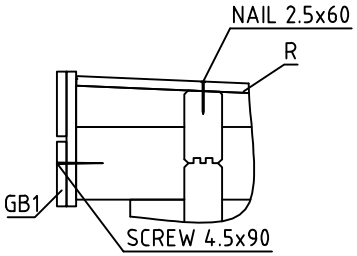

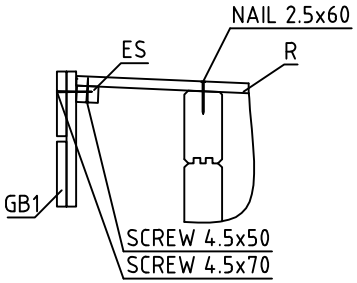

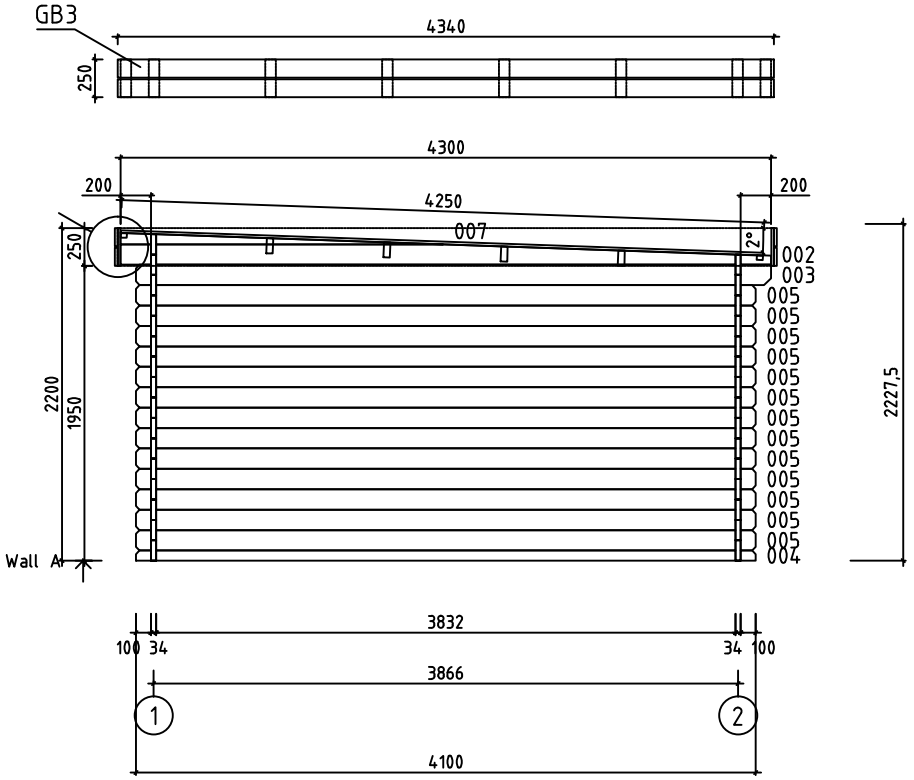

House	Blagnac 34	Sheet	4
Drawing	WALL A	Scale	1:50
Material	34x135	Date	13.09.2019
Drawer	RP	File	Blagnac 34.dwg

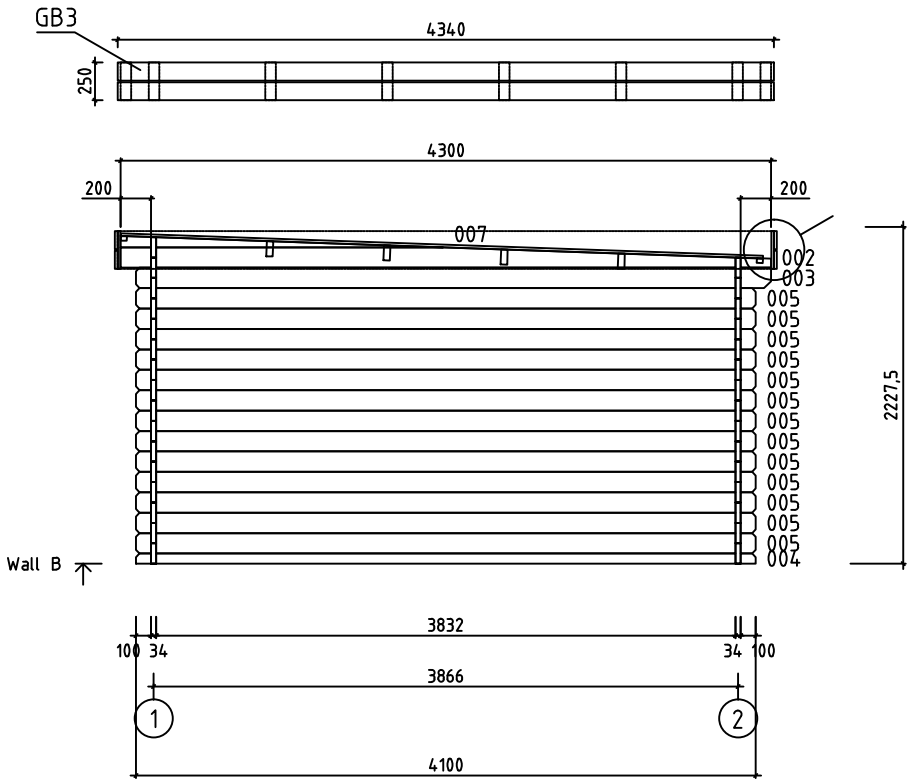

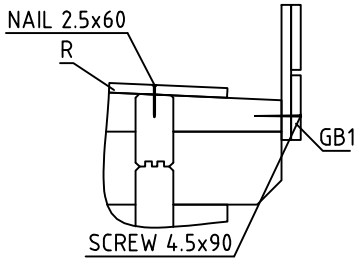

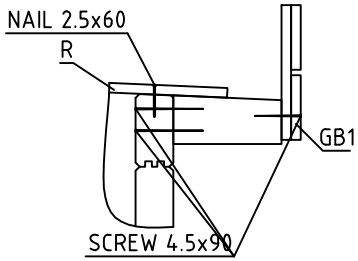

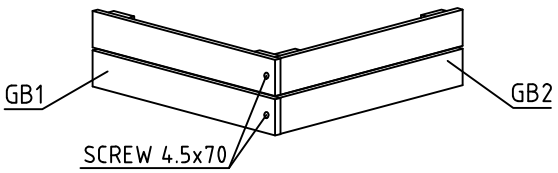

House	Blagnac 34	Sheet	5
Drawing	WALL B	Scale	1:50
Material	34x135	Date	13.09.2019
Drawer	RP	File	Blagnac 34.dwg

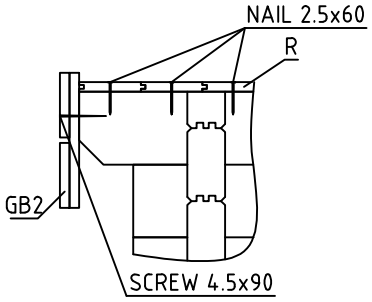

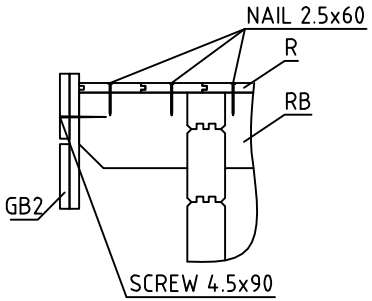

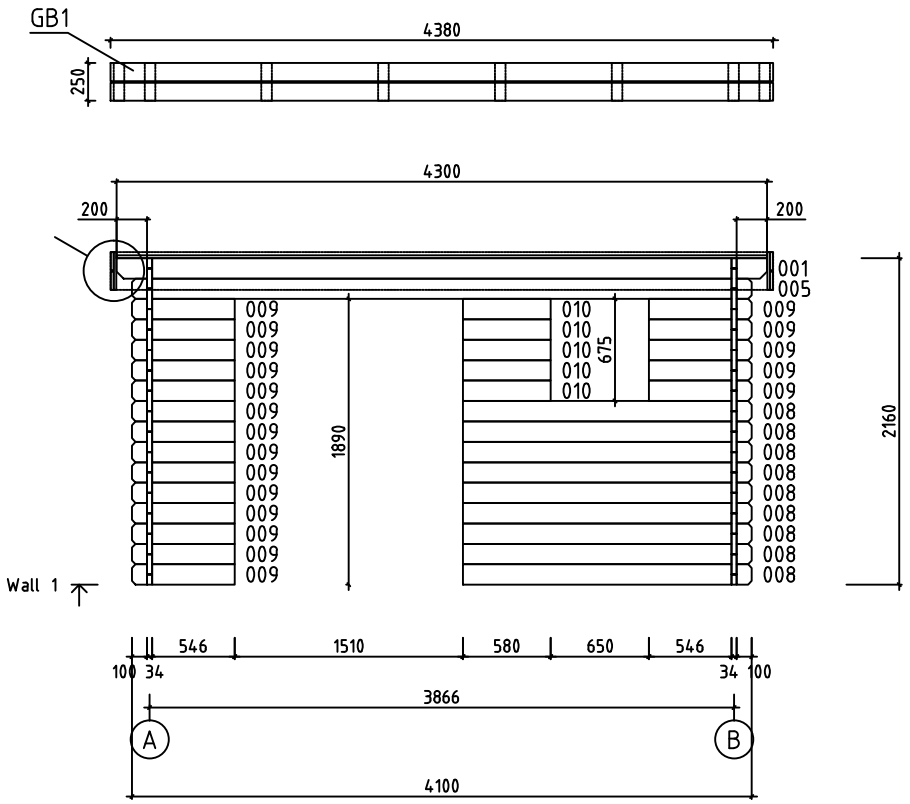

House	Blagnac 34	Sheet	6
Drawing	WALL 1	Scale	1:50
Material	34x135	Date	13.09.2019
Drawer	RP	File	Blagnac 34.dwg

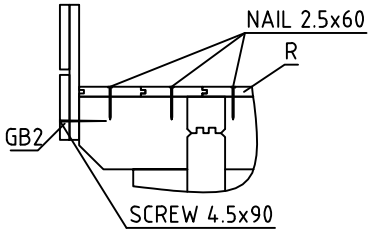

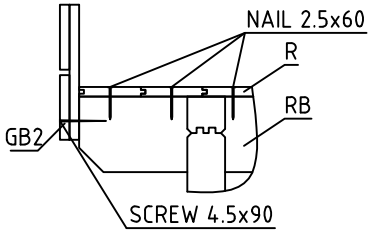

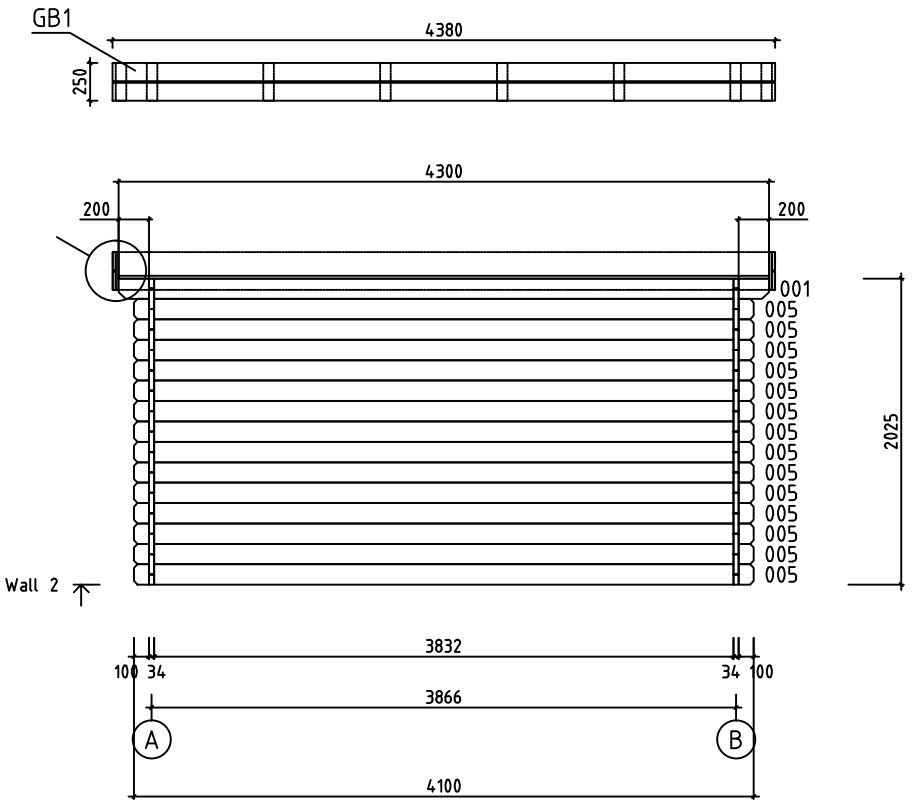

House	Blagnac 34	Sheet	7
Drawing	WALL 2	Scale	1:50
Material	34x135	Date	13.09.2019
Drawer	RP	File	Blagnac 34.dwg

Pos	Specification-Bestimmung-Spécification	PCS	Profile (mm)	L (mm)
001	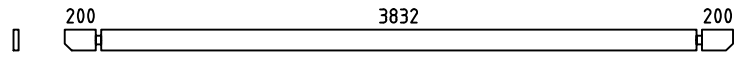	2	34x135	4300
004	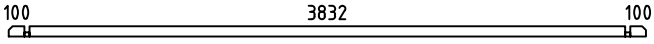	2	34x68	4100
005	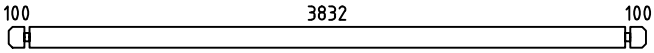	41	34x135	4100
006	SPARE BEAM-ERZATZBOHLE-MADRIER DE RÉSERVE 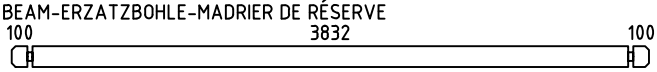	1	34x135	4100
008	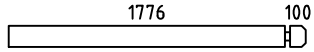	9	34x135	1910
009	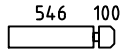	19	34x135	680
010	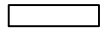	5	34x135	580
WA-1 WB-1	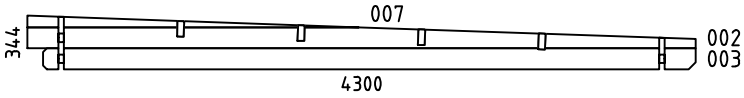	2	34x344	4300
HB	HIT BLOCK-SCHLAGHÖLZER-MADRIERS D´ASSEMBLAGE 	2	34x135	300
FS1	DISTANCE SPACERS FOR GABLE MOULDING-DACHSTÜTZEN-SUPPORTS EXTENSION TOITURE	2	45x90	200
RB1	ROOFBEAMS-DACHBALKEN-SOLIVES DE PLAFOND 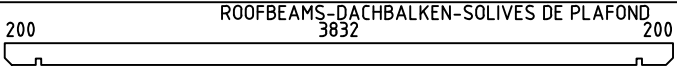	4	43x140	4300
R1	ROOFBOARD-DACHBRETT-VOLIGES or-oder-ou	38+1 50+1	18x114 18x88	4250
GB1	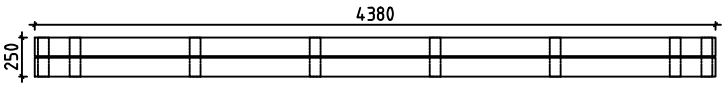	2	36x250	4380
GB2	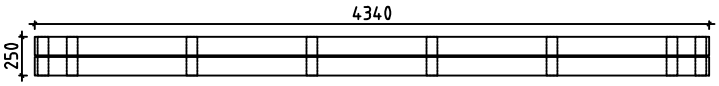	2	36x250	4340
ES1	EAVE SLAT-TRAUFENLEISTE-BAGUETTES POUR FIXER LES LATTES SOUS VOLIGES 	4	30x40	1915
ES2	EAVE SLAT-TRAUFENLEISTE-BAGUETTES POUR FIXER LES LATTES SOUS VOLIGES 	4	30x40	200
SS1	STORM SLAT-STURMLEISTE -BAGUETTE DE TEMPETE TYPE 2	2	18x35	2030
SS2	STORM SLAT-STURMLEISTE -BAGUETTE DE TEMPETE TYPE 2	2	18x35	1930
	SCREWS-SCHRAUBEN-VISSER FOR-FÜR-POUR SS1, SS2	8	M8	90
	WASHER-SCHEIBE-RONDELLE FOR-FÜR-POUR SS1, SS2 	8	M8	
	NUT-NUSS-ÉCROU FOR-FÜR-POUR SS1, SS2 	8	M8	
	NAIL-NAGEL-CLOUS FOR-FÜR-POUR COATING FOR ROOF-BESCHICHTUNG FÜR DACH-REVÉTEMENT DE TOIT	260	⌀2.5	20

House Blagnac 34	Material	File Blagnac 34.dwg	Sheet 8

Pos	Specification-Bestimmung-Spécification	PCS	Profile (mm)	L (mm)
	NAIL-NAGEL-CLOUS FOR-FÜR-POUR R1 	310	⌀2.5	60
	SCREWS-SCHRAUBEN-VIS FOR-FÜR-POUR ES1, ES2 	20	⌀4.5	50
	SCREWS-SCHRAUBEN-VIS FOR-FÜR-POUR GB1, GB2 	20	⌀4.5	70
	SCREWS-SCHRAUBEN-VIS FOR-FÜR-POUR FS1, GB1, GB2 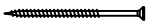	20	⌀4.5	90
	SCREWS-SCHRAUBEN-VIS FOR-FÜR-POUR WA-1, WB-1, RB1 	20	⌀6.0	160
	COATING FOR ROOF-BESCHICHTUNG FÜR DACH-REVÉTEMENT DE TOIT 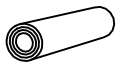	2,0	R = 15m	
	DOUBLEDOOR-DOPPELTÜR-DOUBLE PORTE (right-rechts-droit) AST_PL P	1	1500	1860
	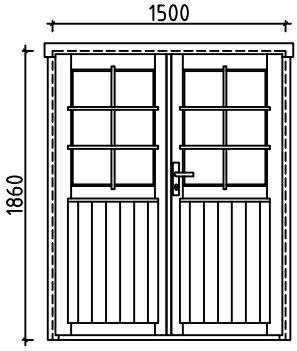			
	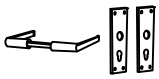	1		
		1		
		1		
		6		
		2		
	WINDOW-FENSTER-FENÉTRE (right-rechts-droit) AST_KP_PL P	1	640	640
	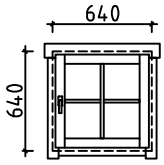			
	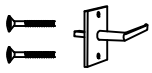	1		
		1		
		1		

House Blagnac 34	Material	File Blagnac 34.dwg	Sheet 9

#001	1,2	4300	2
#002	A,B	4300	2
#003	A,B	4200	2
#004	A,B	4100	2
#005	1,2,A,B	4100	41
#006		4100	1
#007	A,B	2133	2
#008	1	1910	9
#009	1	680	19
#010	1	580	5