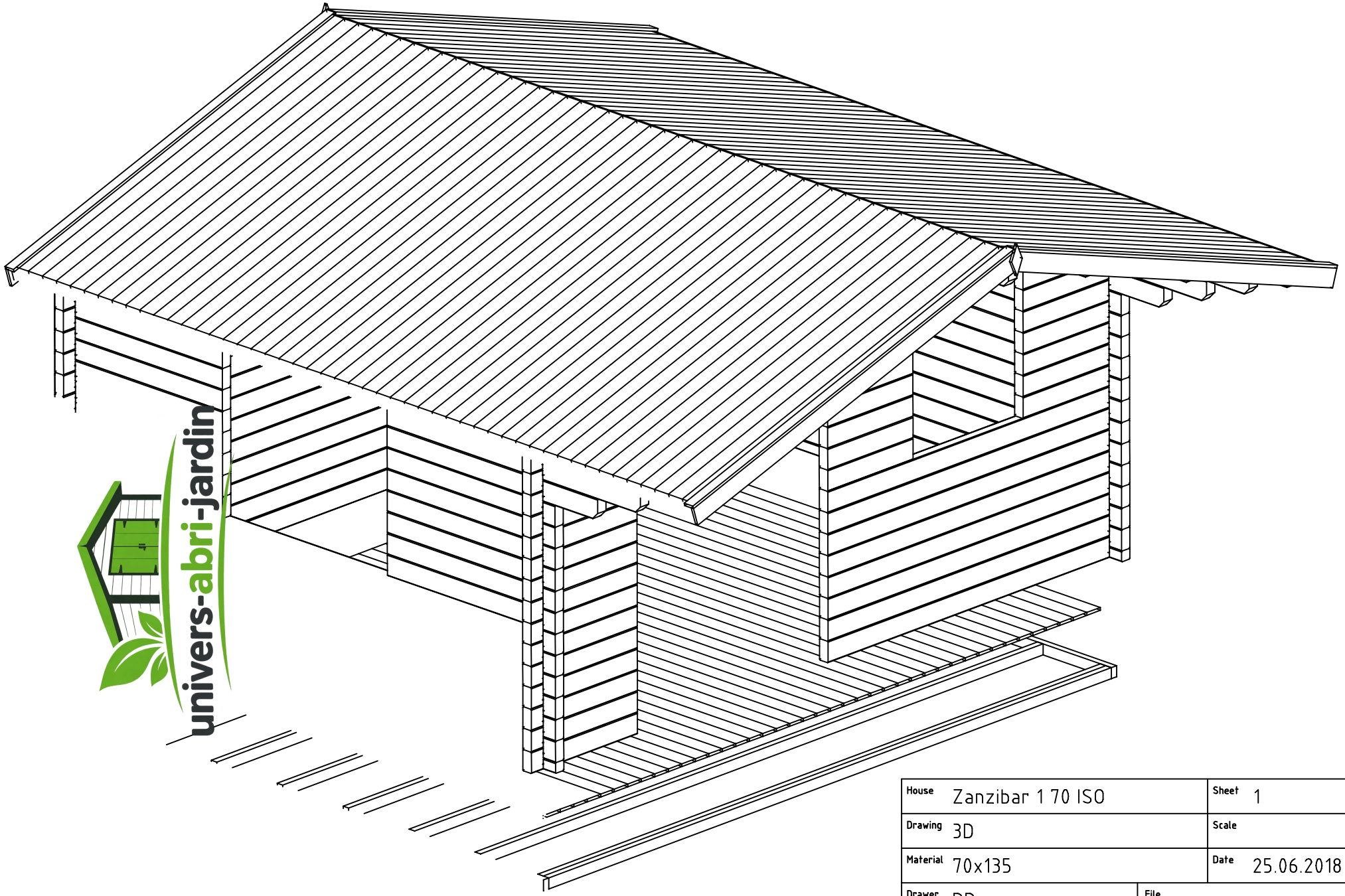

univers-abri-jardin

House	Zanzibar 1 70 ISO	Sheet	1
Drawing	3D	Scale	
Material	70x135	Date	25.06.2018
Drawer	RP	File	Zanzibar 1 70 ISO 3D.dwg

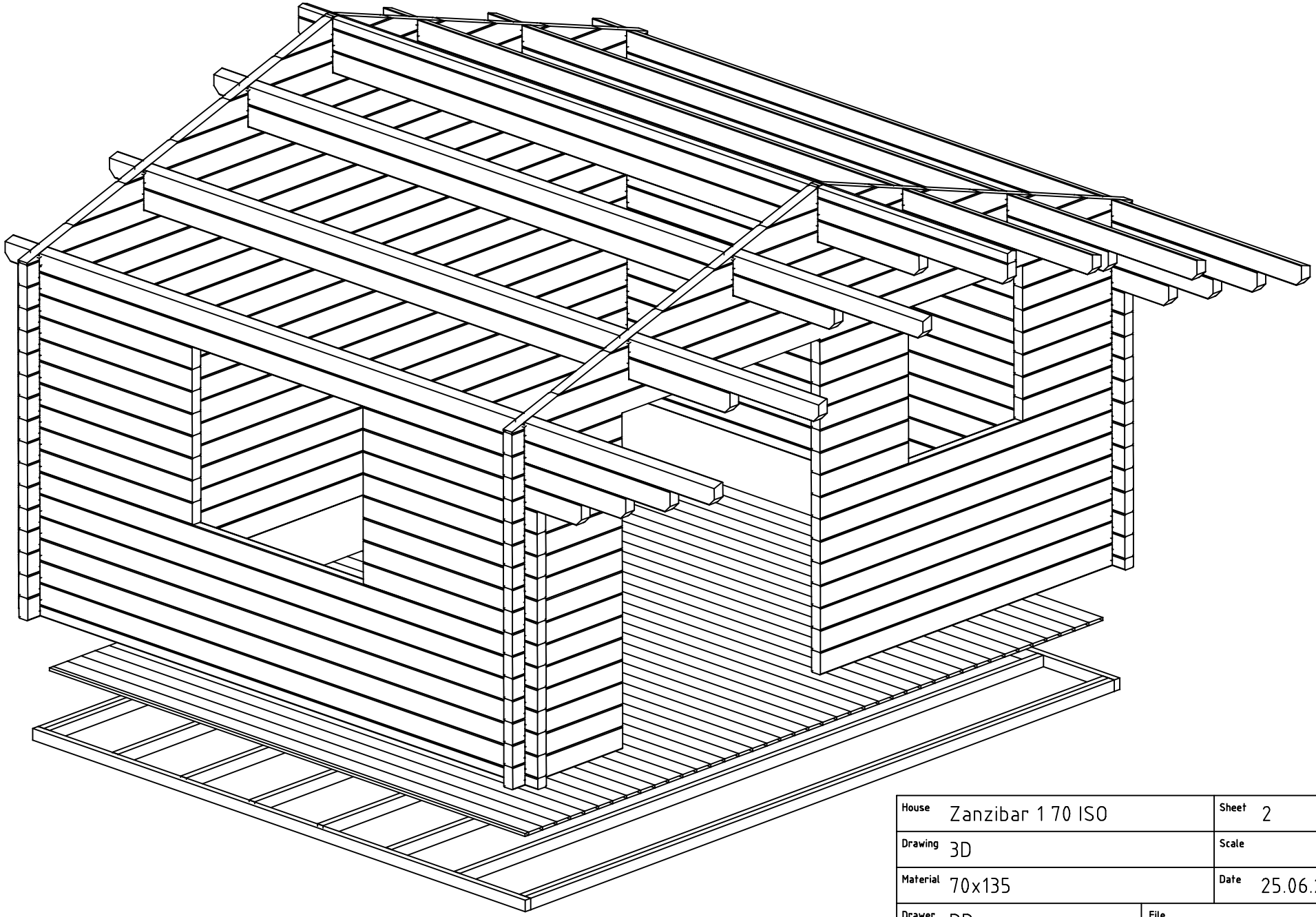

House	Zanzibar 1 70 ISO	Sheet	2
Drawing	3D	Scale	
Material	70x135	Date	25.06.2018
Drawer	RP	File	Zanzibar 1 70 ISO 3D.dwg

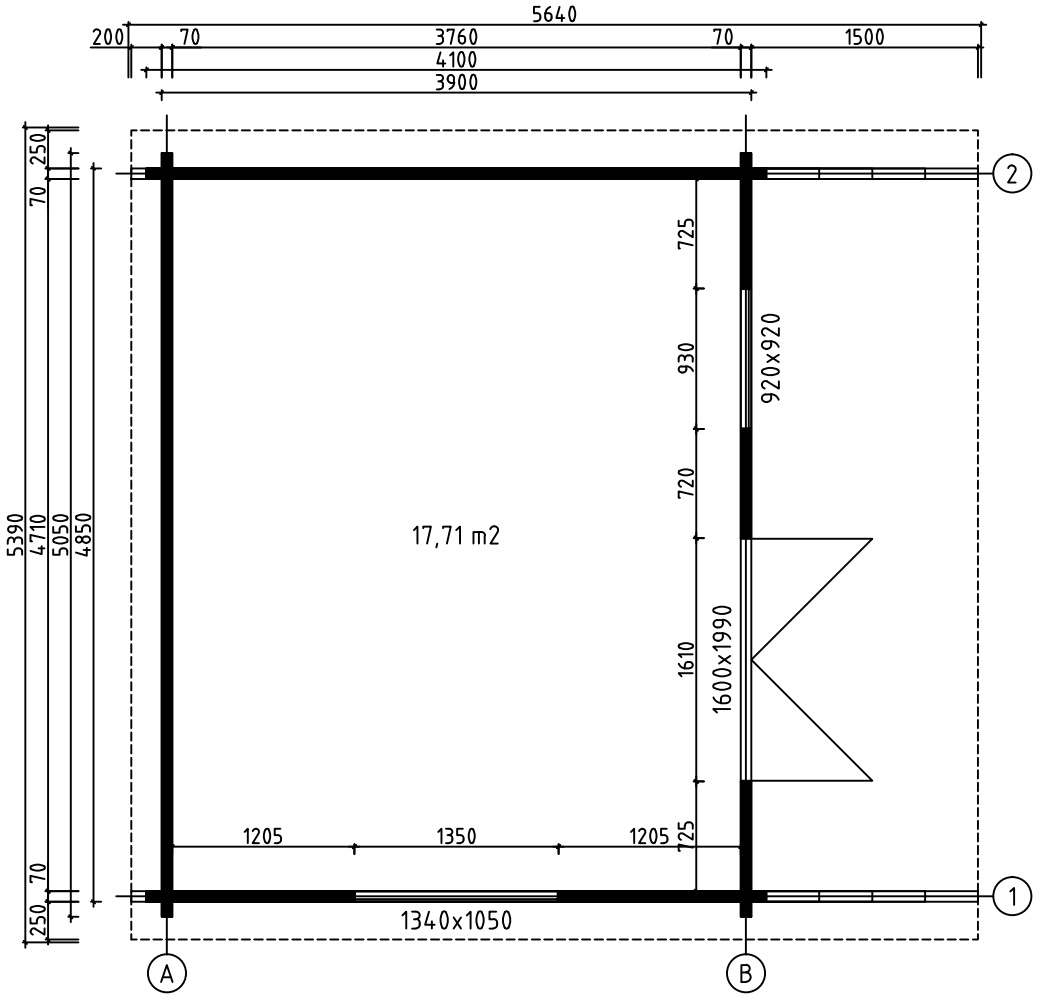

House	Zanzibar 1 70 ISO	Sheet	3
Drawing	GROUNDPLAN	Scale	1:50
Material	70x135	Date	25.06.2018
Drawer	RP	File	Zanzibar 1 70 ISO.dwg

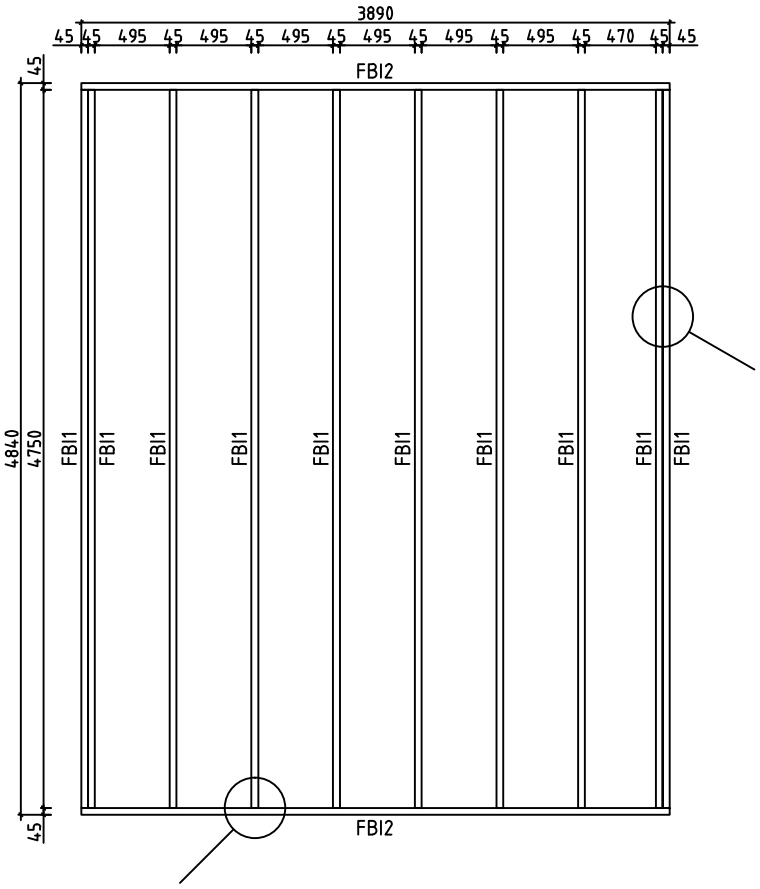

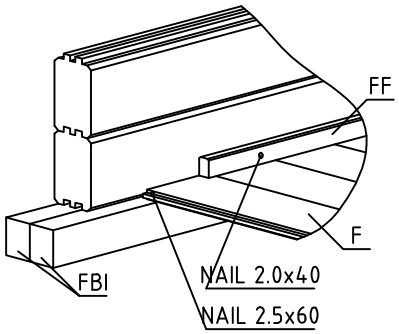

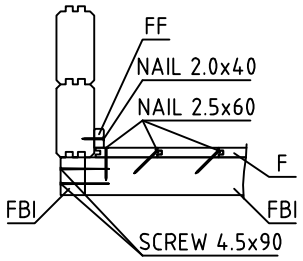

House	Zanzibar 1 70 ISO	Sheet	4
Drawing	FLOORBEAMS	Scale	1:50
Material	45x70	Date	25.06.2018
Drawer	RP	File	Zanzibar 1 70 ISO.dwg

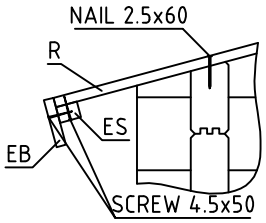

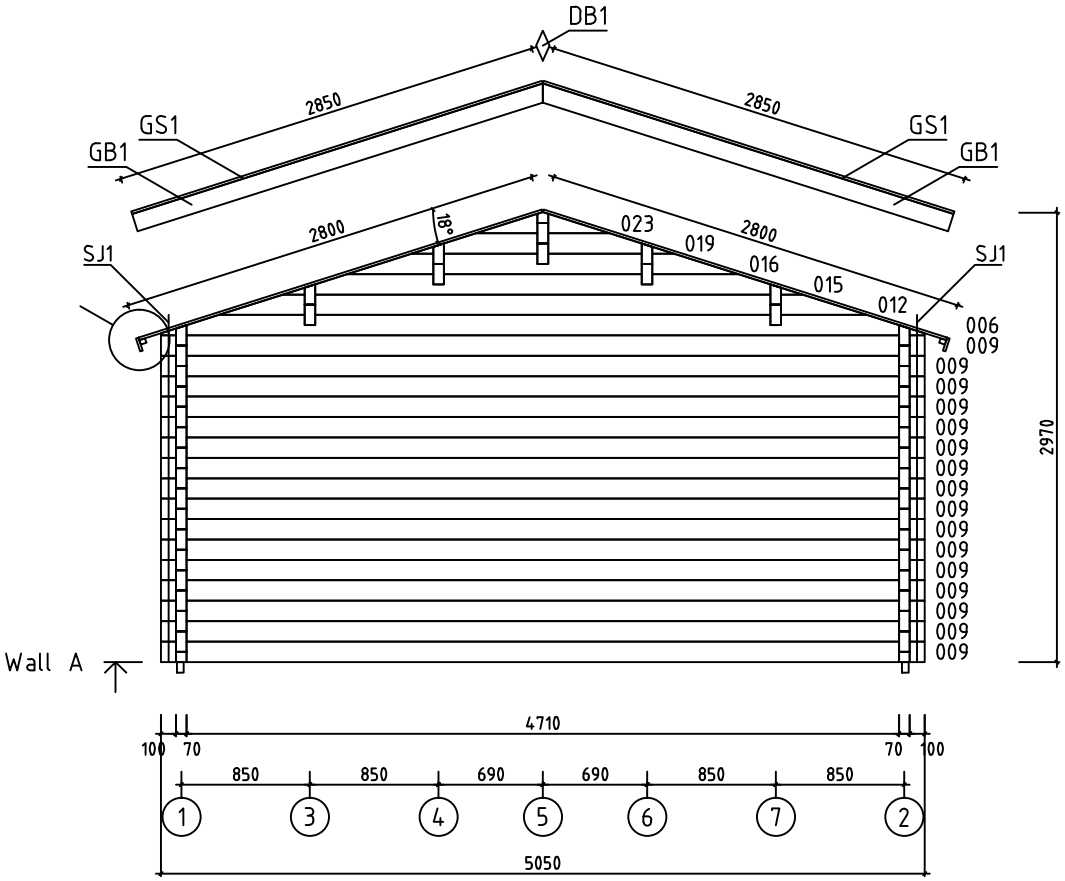

House	Zanzibar 1 70 ISO	Sheet	5
Drawing	WALL A	Scale	1:50
Material	70x135	Date	25.06.2018
Drawer	RP	File	Zanzibar 1 70 ISO.dwg

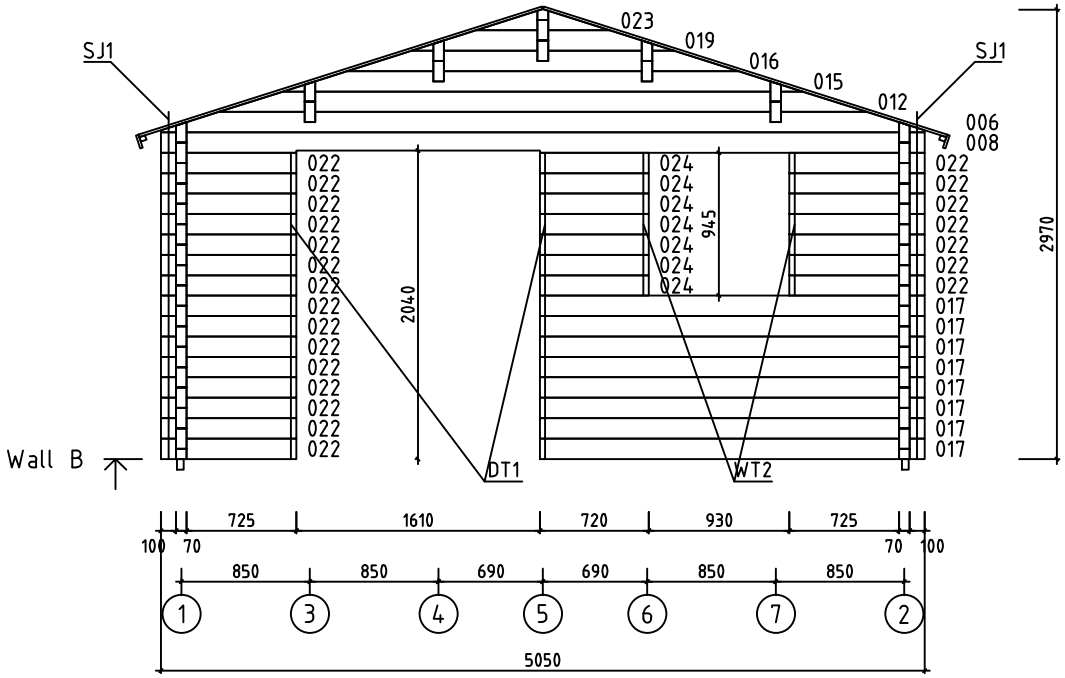

House	Zanzibar 1 70 ISO	Sheet	6
Drawing	WALL B	Scale	1:50
Material	70x135	Date	25.06.2018
Drawer	RP	File	Zanzibar 1 70 ISO.dwg

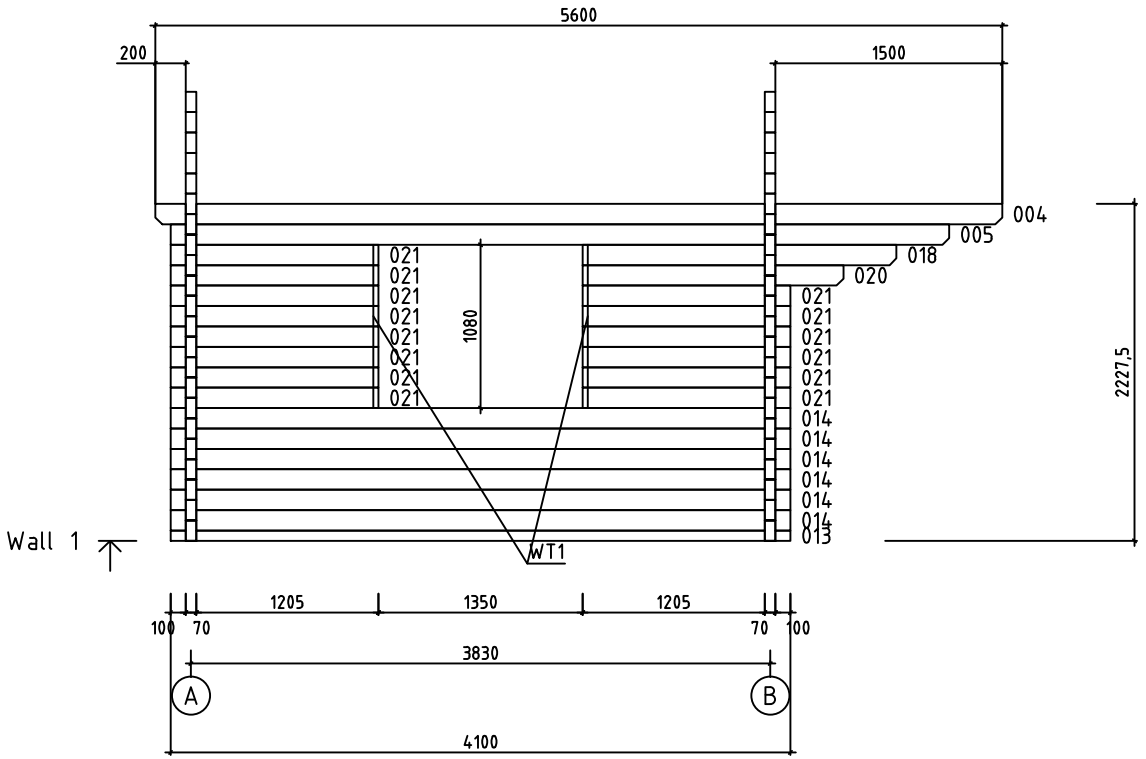

House	Zanzibar 1 70 ISO	Sheet	7
Drawing	WALL 1	Scale	1:50
Material	70x135	Date	25.06.2018
Drawer	RP	File	Zanzibar 1 70 ISO.dwg

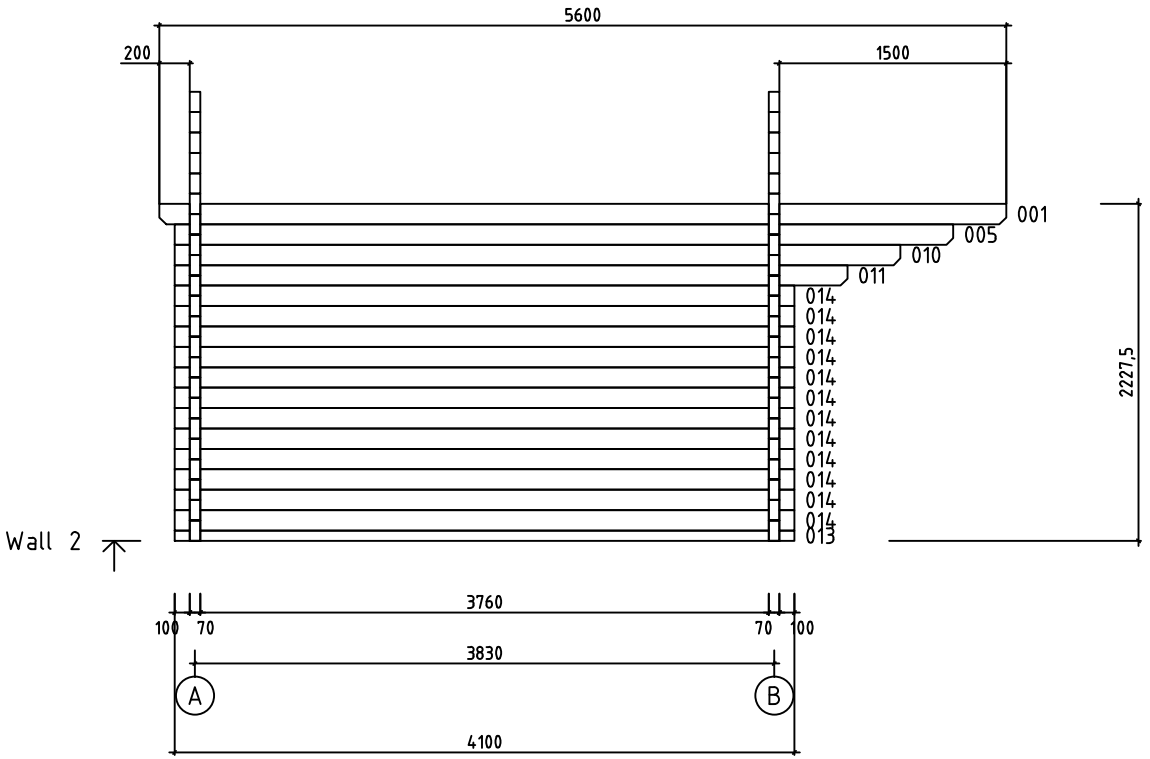

House	Zanzibar 1 70 ISO	Sheet	8
Drawing	WALL 2	Scale	1:50
Material	70x135	Date	25.06.2018
Drawer	RP	File	Zanzibar 1 70 ISO.dwg

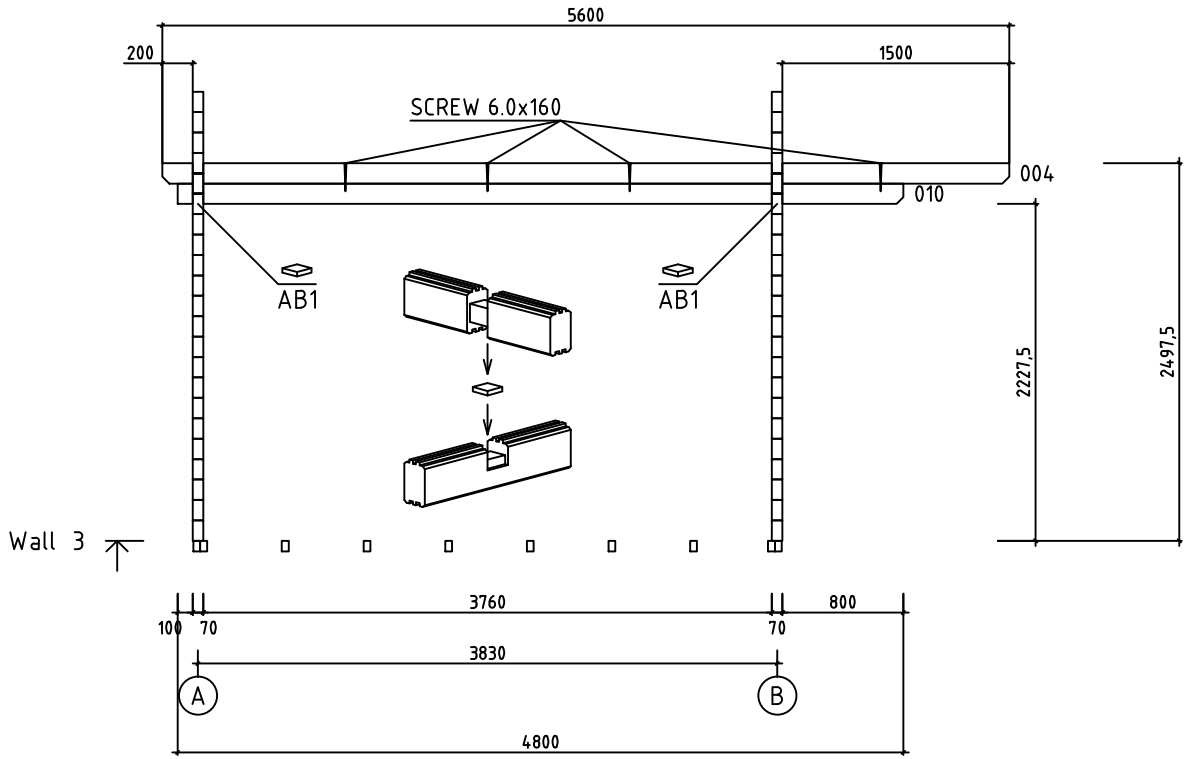

House	Zanzibar 1 70 ISO	Sheet	9
Drawing	WALL 3	Scale	1:50
Material	70x135	Date	25.06.2018
Drawer	RP	File	Zanzibar 1 70 ISO.dwg

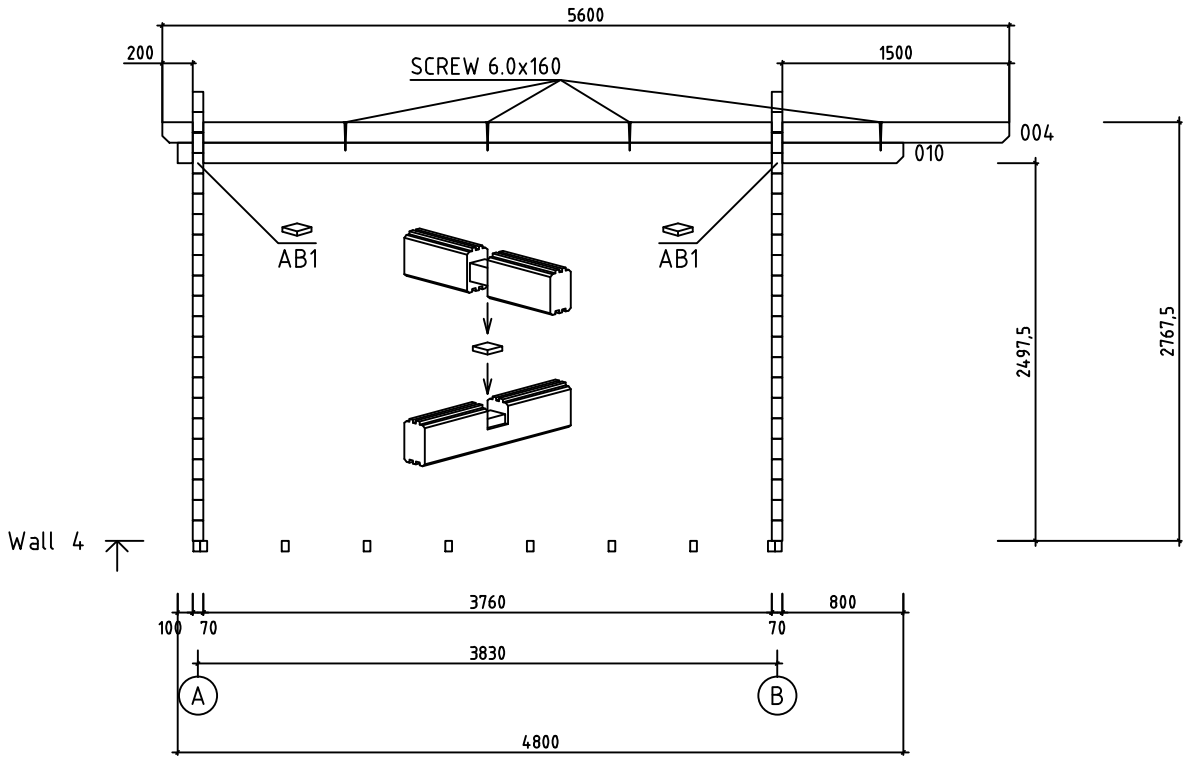

House	Zanzibar 1 70 ISO	Sheet	10
Drawing	WALL 4	Scale	1:50
Material	70x135	Date	25.06.2018
Drawer	RP	File	Zanzibar 1 70 ISO.dwg

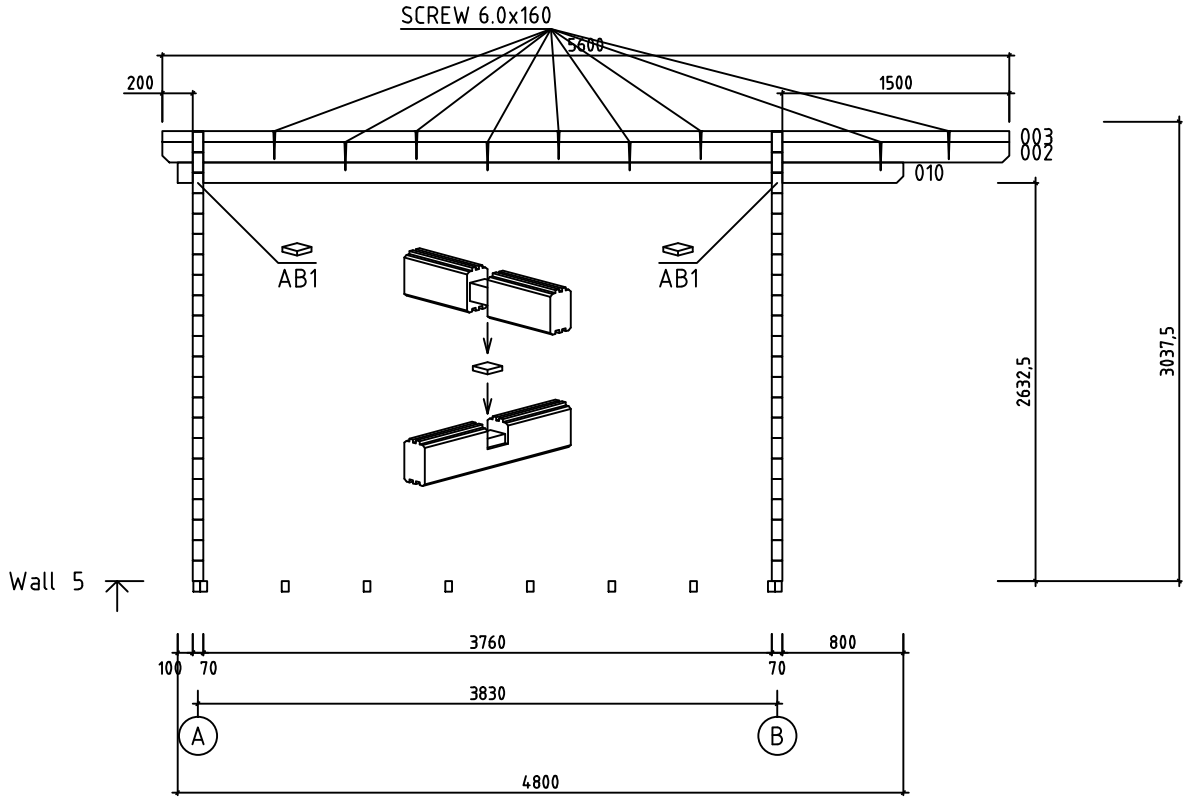

House	Zanzibar 1 70 ISO	Sheet	11
Drawing	WALL 5	Scale	1:50
Material	70x135	Date	25.06.2018
Drawer	RP	File	Zanzibar 1 70 ISO.dwg

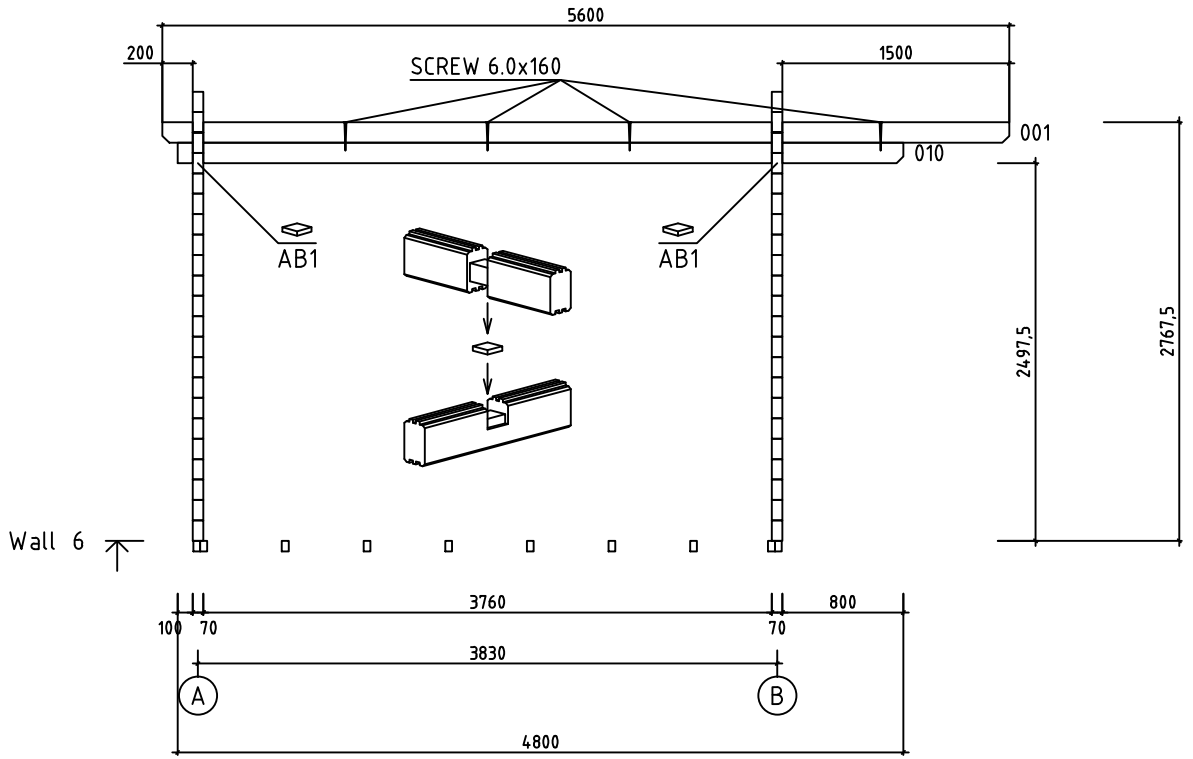

House	Zanzibar 1 70 ISO	Sheet	12
Drawing	WALL 6	Scale	1:50
Material	70x135	Date	25.06.2018
Drawer	RP	File	Zanzibar 1 70 ISO.dwg

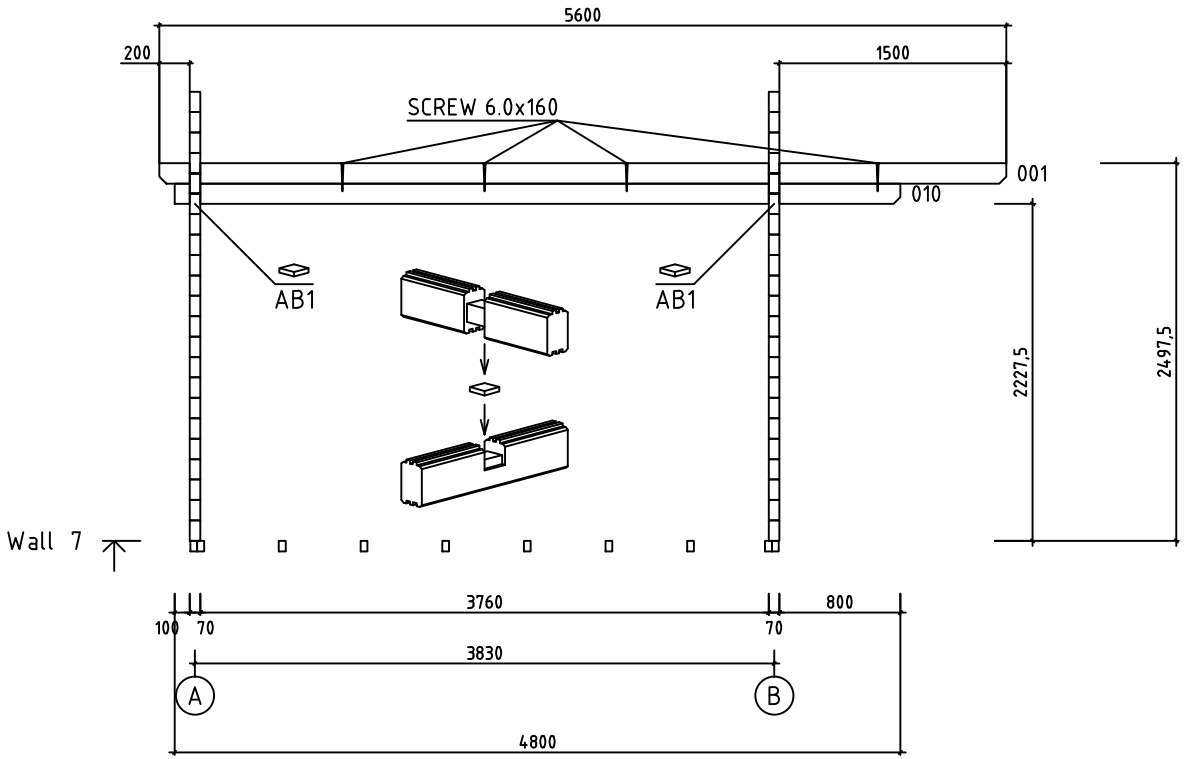

House	Zanzibar 1 70 ISO	Sheet	13
Drawing	WALL 7	Scale	1:50
Material	70x135	Date	25.06.2018
Drawer	RP	File	Zanzibar 1 70 ISO.dwg

Pos	Specification-Bestimmung-Spécification	PCS	Profile (mm)	L (mm)
001	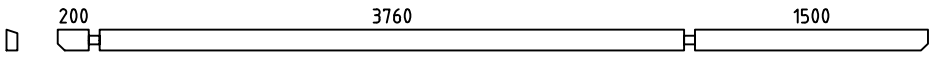	3	70x135	5600
002	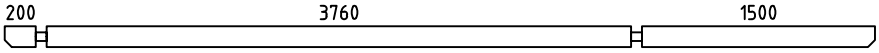	1	70x135	5600
003	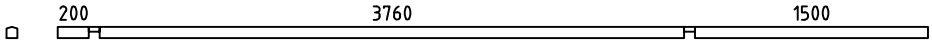	1	70x73	5600
004	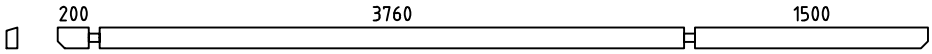	3	70x135	5600
005	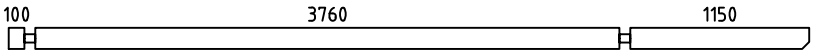	2	70x135	5150
007	SPARE BEAM-ERZATZBOHLE-MADRIER DE RÉSERVE 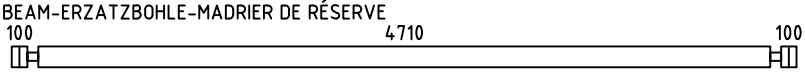	1	70x135	5050
008	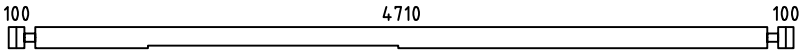	1	70x135	5050
009	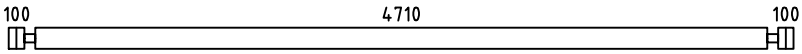	16	70x135	5050
010	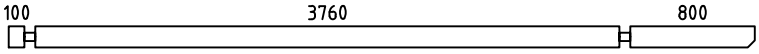	6	70x135	4800
011	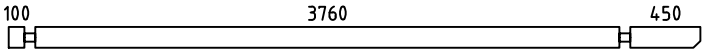	1	70x135	4450
013	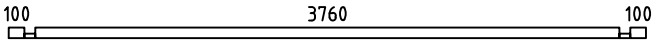	2	70x68	4100
014	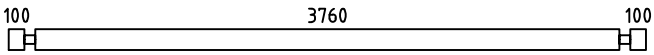	18	70x135	4100
017	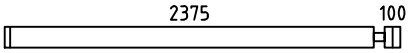	8	70x135	2545
018	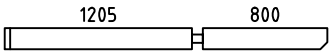	1	70x135	2075
020	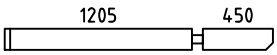	1	70x135	1725
021	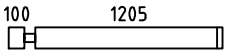	14	70x135	1375
022	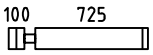	22	70x135	895
024	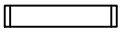	7	70x135	720
WA-1 WB-1	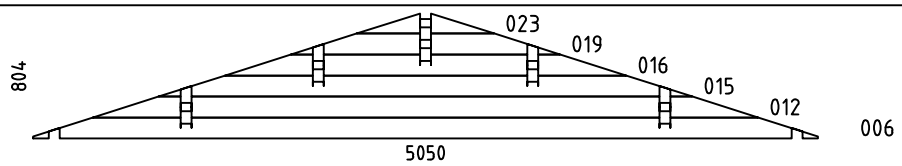	2	70x804	5050
HB	HIT BLOCK-SCHLAGHÖLZER-MADRIERS D´ASSEMBLAGE 	2	70x135	300
FBI1	FLOORBEAMS-FUSSBODENBALKEN-POUTRES DE FONDATION IMPRÉGNÉS IMM	10	45x70	4750
FBI2	FLOORBEAMS-FUSSBODENBALKEN-POUTRES DE FONDATION IMPRÉGNÉS IMM	2	45x70	3890
F1	FLOORBOARD-FUSSBODENBRETT-PLANCHER  or-oder-ou	42+1 55+1	18x114 18x88	3755
R1	ROOFBOARD-DACHBRETT-VOLIGES  or-oder-ou	100+2 130+2	18x114 18x88	2800

House	Material	File	Sheet
Zanzibar 1 70 ISO		Zanzibar 1 70 ISO.dwg	14

Pos	Specification-Bestimmung-Spécification	PCS	Profile (mm)	L (mm)
FF1	FLOOR FILLET-FUSSBODENLEISTE-BAGUETTE DE FINITION DE PLANCHER		18x35	17m
GB1	GABLE BOARD-GIEBELBLENDE-PLANCHE DE RIVE 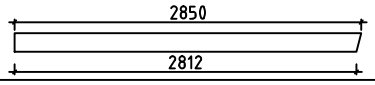	4	18x120	2850
GS1	ROOF FELT FILLET-GIEBELLEISTE-BAGUETTES POUR FIXER LES PLANCHES DE RIVE	4	18x70	2850
EB1	EAVE BOARD-TRAUFBRETT-LATTES SOUS VOLIGES	4	18x90	2800
ES1	EAVE SLAT-TRAUFENLEISTE-BAGUETTES POUR FIXER LES LATTES SOUS VOLIGES	4	30x40	2800
DB1	DIAMOND-RAUTE-ELÉMENTS DE DÉCORATION	2	18x90	200
DT1	DOOR ASSEMBLING PROFILE-TÜR INSTALLIERUNGSPROFIL -TASSEAU DE FIXATION POUR PORTES	2	18x25	1990
WT1	WINDOW ASSEMBLING PROFILE-FENSTER INSTALLIERUNGSPROFIL -TASSEAU DE FIXATION POUR FENÉTRE	2	18x25	1050
WT2	WINDOW ASSEMBLING PROFILE-FENSTER INSTALLIERUNGSPROFIL -TASSEAU DE FIXATION POUR FENÉTRE	2	18x25	920
AB1	ASSEMBLING BOARD-MONTAGE BOARD-MUR D´ASSEMBLAGE	10	15x52	58
SJ1	SCREW JOINT-GEWINDESTANGE -TIGES FILETÉS	4	M10	2220
	NAIL-NAGEL-CLOUS FOR-FÜR-POUR FF1	40	ø2.0	40
	NAIL-NAGEL-CLOUS FOR-FÜR-POUR COATING FOR ROOF-BESCHICHTUNG FÜR DACH-REVÉTEMENT DE TOIT	450	ø2.5	20
	NAIL-NAGEL-CLOUS FOR-FÜR-POUR F1, R1	980	ø2.5	60
	SCREWS-SCHRAUBEN-VIS FOR-FÜR-POUR GB1, GS1, EB1, ES1, DB1	80	ø4.5	50
	SCREWS-SCHRAUBEN-VIS FOR-FÜR-POUR 013 FBI1, FBI2	50	ø4.5	90
	SCREWS-SCHRAUBEN-VIS FOR-FÜR-POUR WA-1, WB-1 001, 002, 003, 004	50	ø6.0	160
	COATING FOR ROOF-BESCHICHTUNG FÜR DACH-REVÉTEMENT DE TOIT	4,0	R = 15m	
	DOUBLEDOOR-DOPPELTÜR-DOUBLE PORTE (left-links-gauche) ORT__1H V	1	1600	1930
	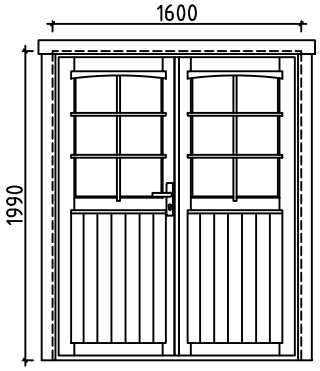	1 1 1 2		

House Zanzibar 1 70 ISO	Material	File Zanzibar 1 70 ISO.dwg	Sheet 15

Pos	Specification-Bestimmung-Spécification	PCS	Profile (mm)	L (mm)
	DOUBLE WINDOW-DOPPEL FENSTER-DOUBLE FENÉTRE P (right-rechts-droit) ORT__1H 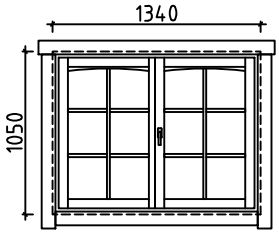 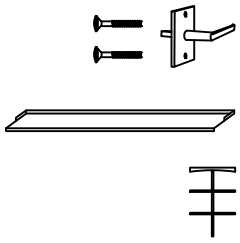	1 1 1 2	1340	1050
	WINDOW-FENSTER-FENÉTRE (left-links-gauche) ORT__1H V 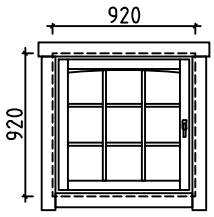 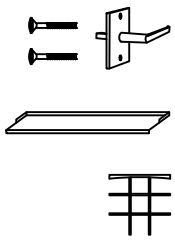	1 1 1 1	920	920

House Zanzibar 1 70 ISO	Material	File Zanzibar 1 70 ISO.dwg	Sheet 16

#001	2,6,7	5600	3
#002	5	5600	1
#003	5	5600	1
#004	1,3,4	5600	3
#005	1,2	5150	2
#006	A,B	5050	2
#007		5050	1
#008	B	5050	1
#009	A	5050	16
#010	2,3,4,5,6,7	4800	6
#011	2	4450	1
#012	A,B	4285	2
#013	1,2	4100	2
#014	1,2	4100	18
#015	A,B	3435	2
#016	A,B	2585	2
#017	B	2545	8
#018	1	2075	1
#019	A,B	1735	2
#020	1	1725	1
#021	1	1375	14
#022	B	895	22
#023	A,B	885	2
#024	B	720	7