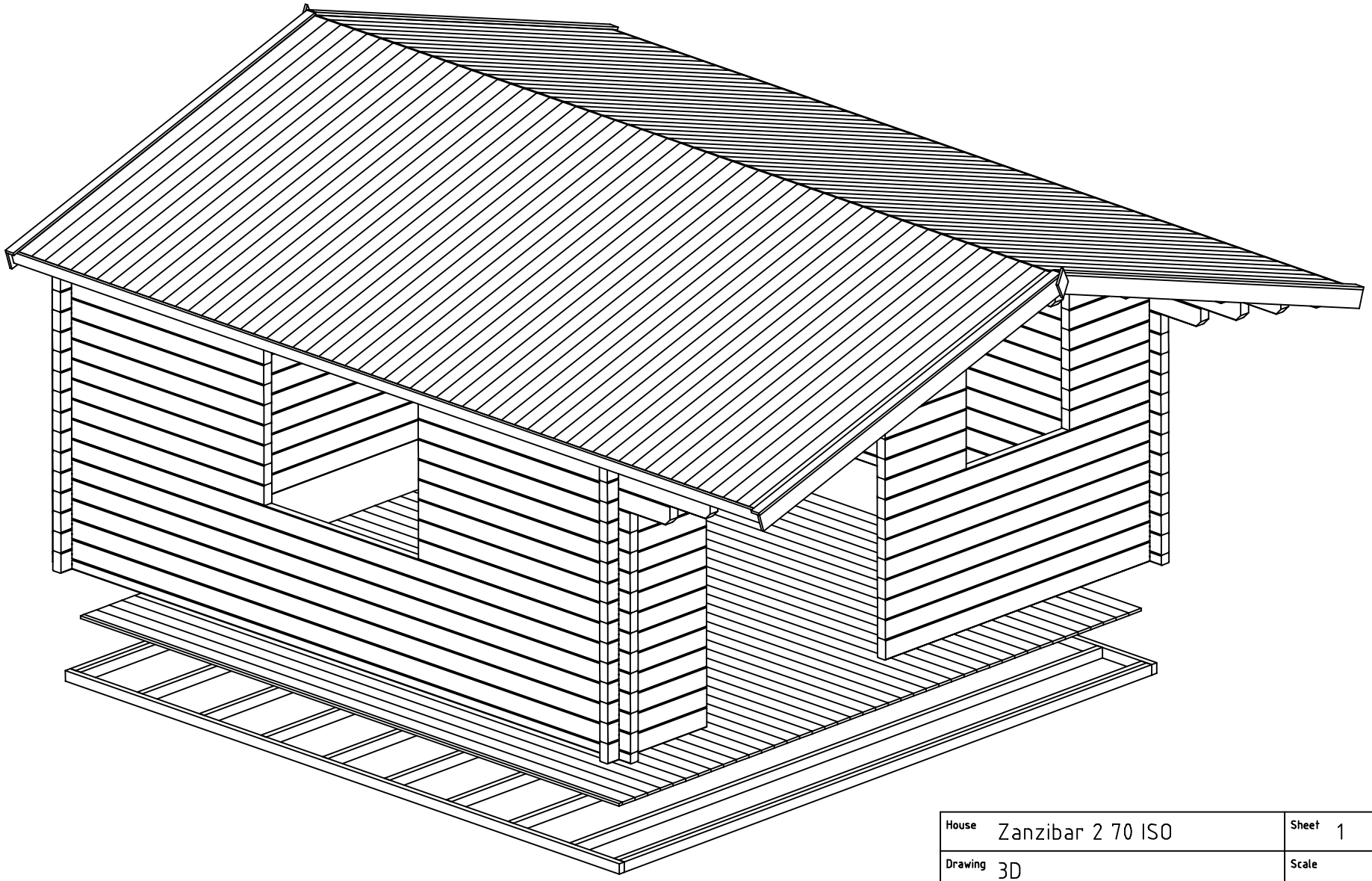

House	Zanzibar 2 70 ISO	Sheet	1
Drawing	3D	Scale	
Material	70x135	Date	28.05.2019
Drawer	RP	File	Zanzibar 2 70 ISO 3D.dwg

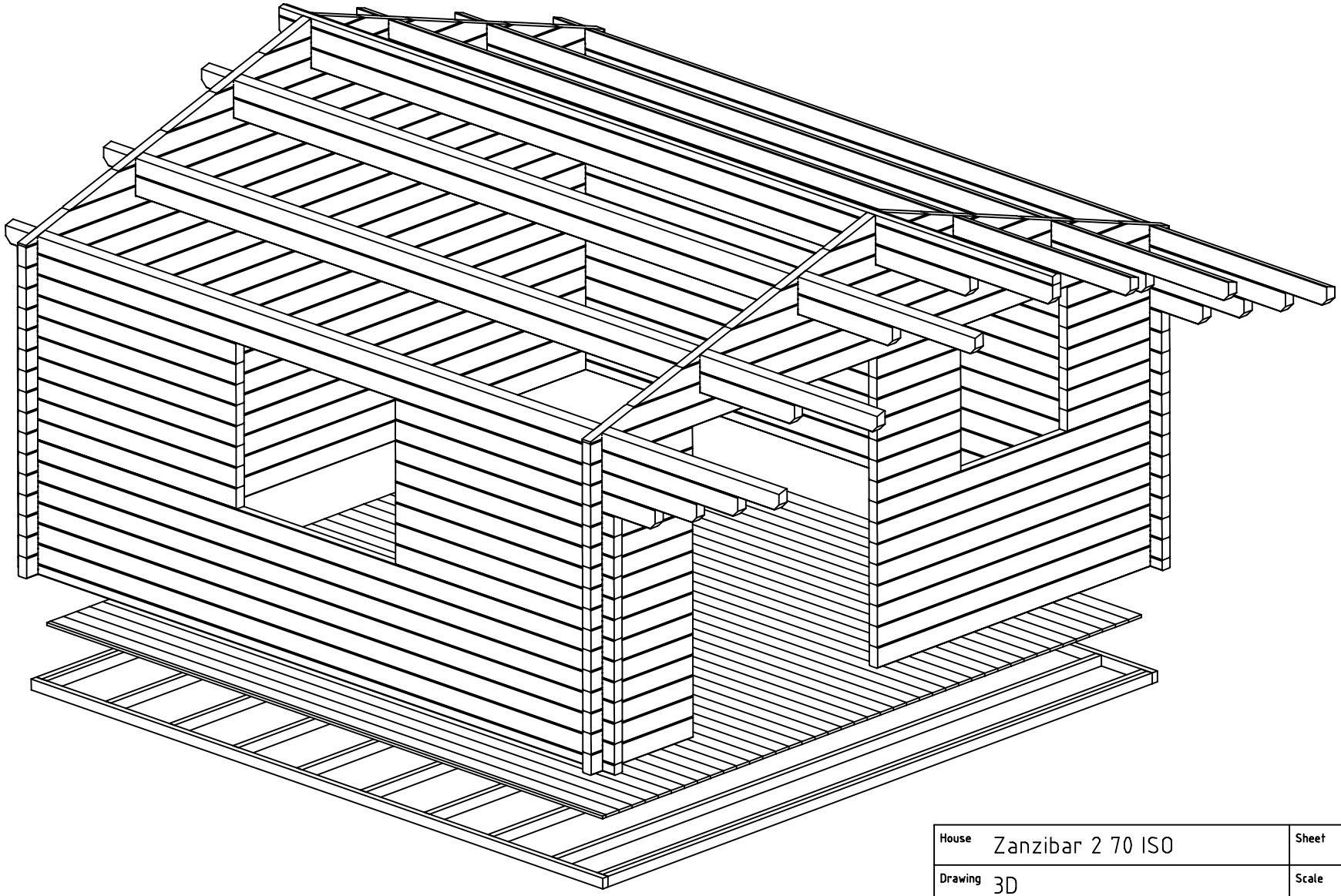

House	Zanzibar 2 70 ISO	Sheet	2
Drawing	3D	Scale	
Material	70x135	Date	28.05.2019
Drawer	RP	File	Zanzibar 2 70 ISO 3D.dwg

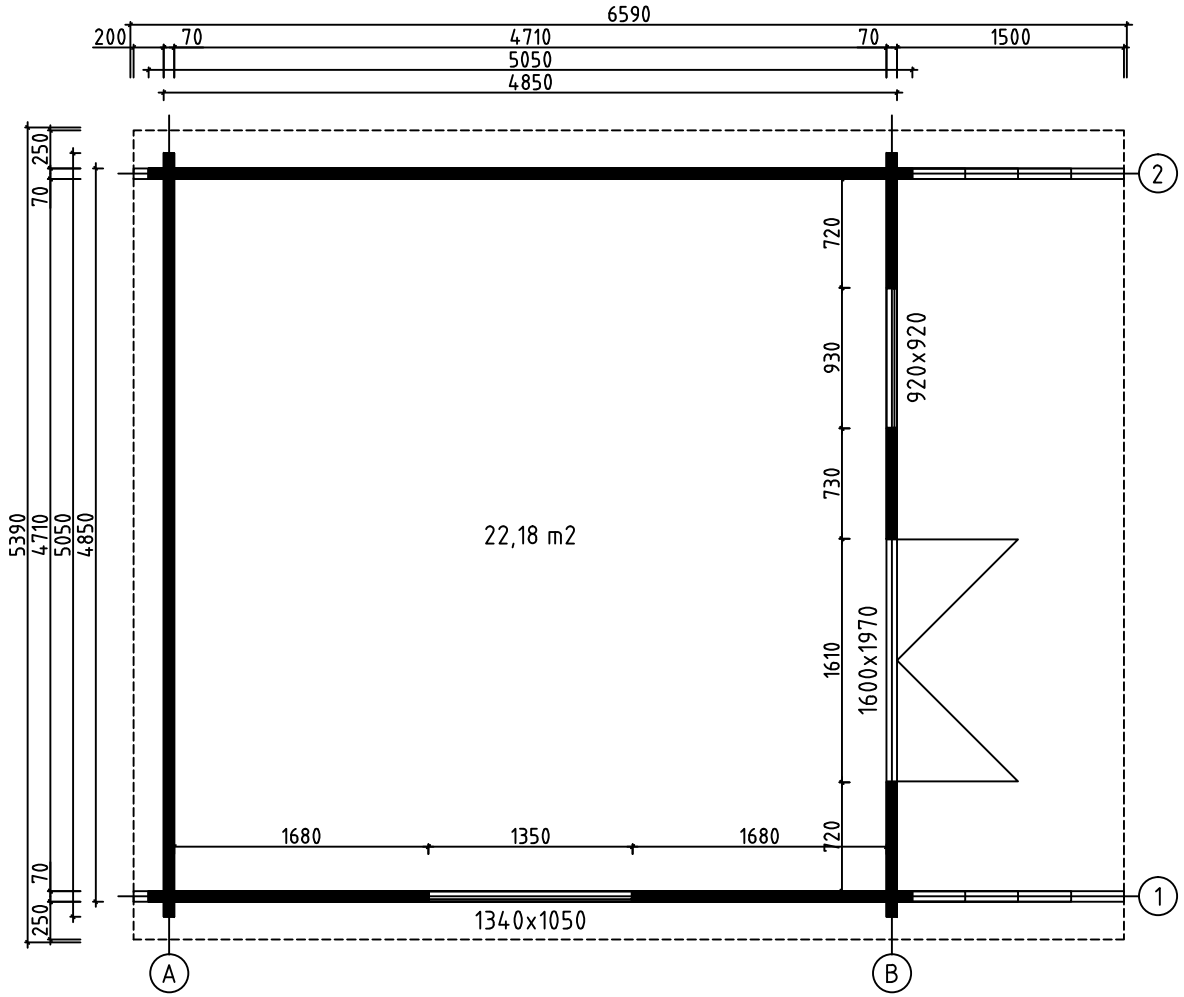

House	Zanzibar 2 70 ISO	Sheet	3
Drawing	GROUNDPLAN	Scale	1:50
Material	70x135	Date	28.05.2019
Drawer	RP	File	Zanzibar 2 70 ISO.dwg

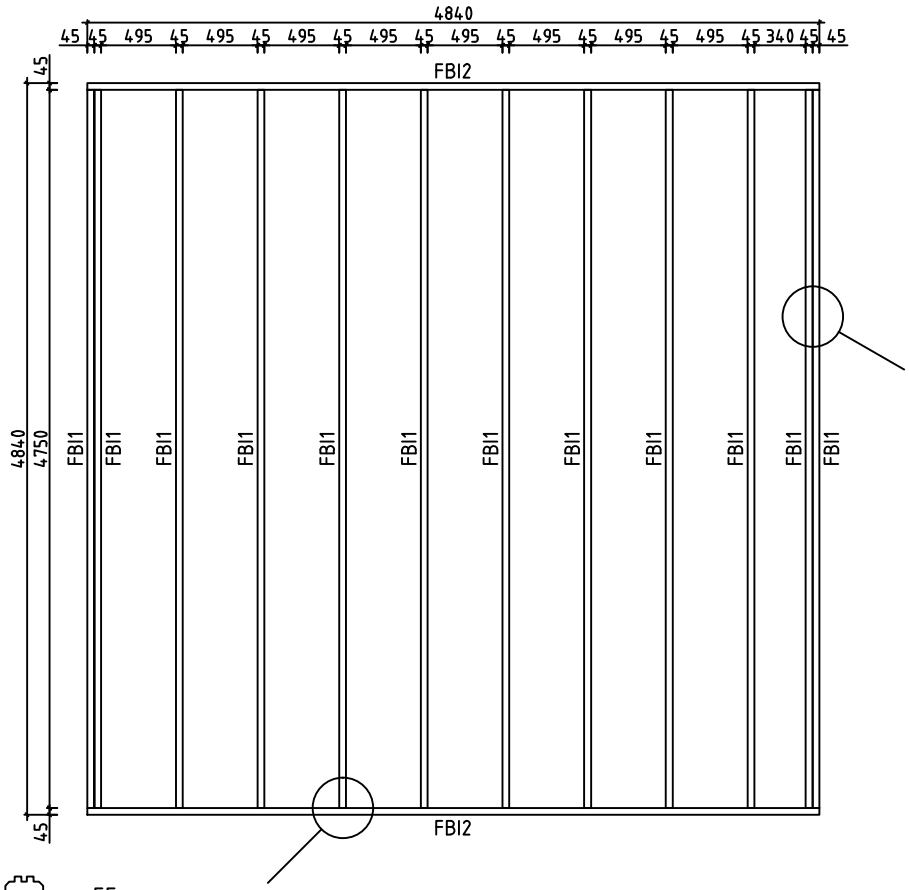

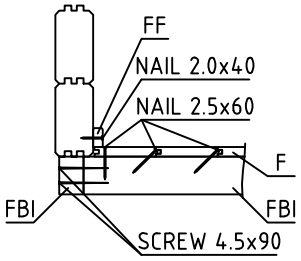

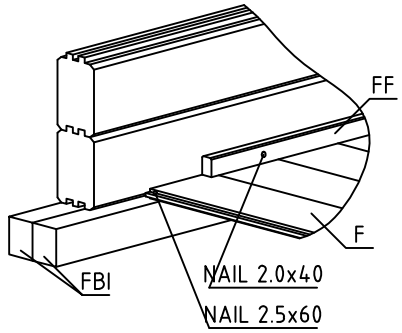

House	Zanzibar 2 70 ISO	Sheet	4
Drawing	FLOORBEAMS	Scale	1:50
Material	45x70	Date	28.05.2019
Drawer	RP	File	Zanzibar 2 70 ISO.dwg

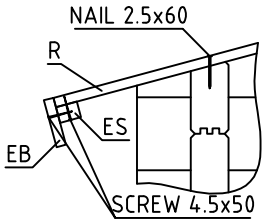

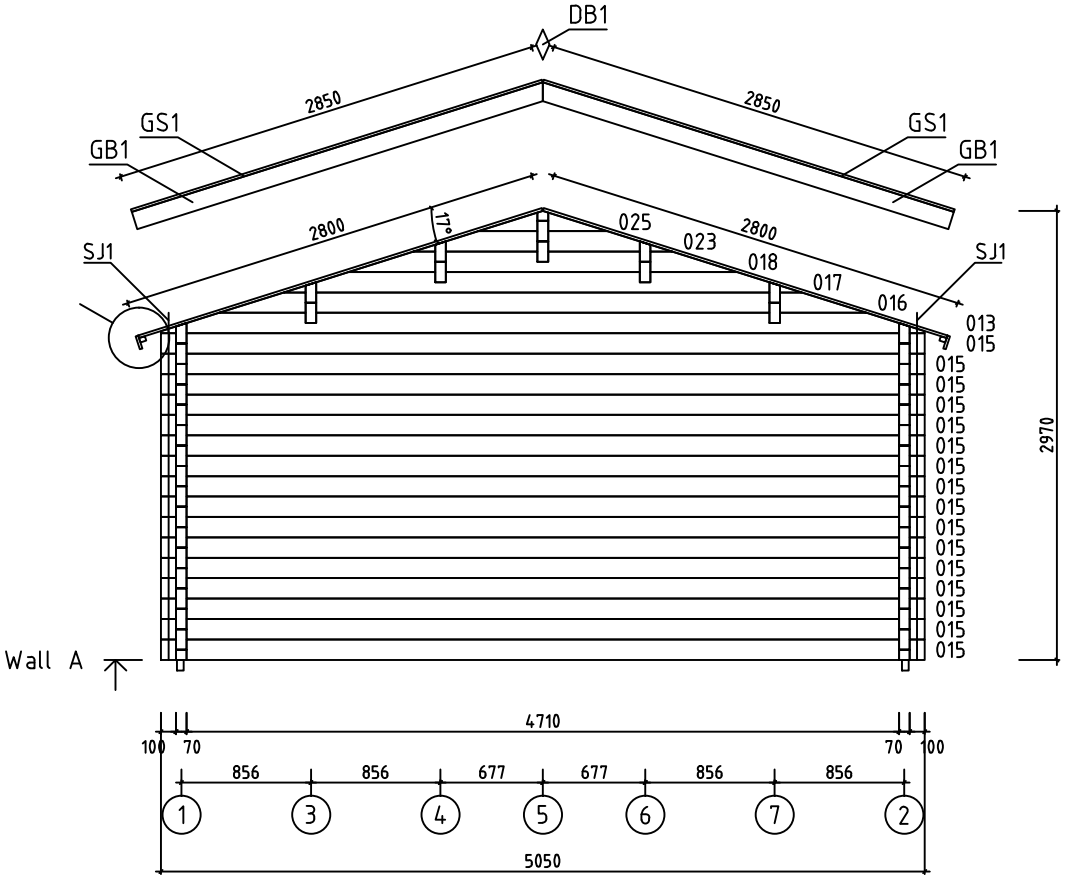

House	Zanzibar 2 70 ISO	Sheet	5
Drawing	WALL A	Scale	1:50
Material	70x135	Date	28.05.2019
Drawer	RP	File	Zanzibar 2 70 ISO.dwg

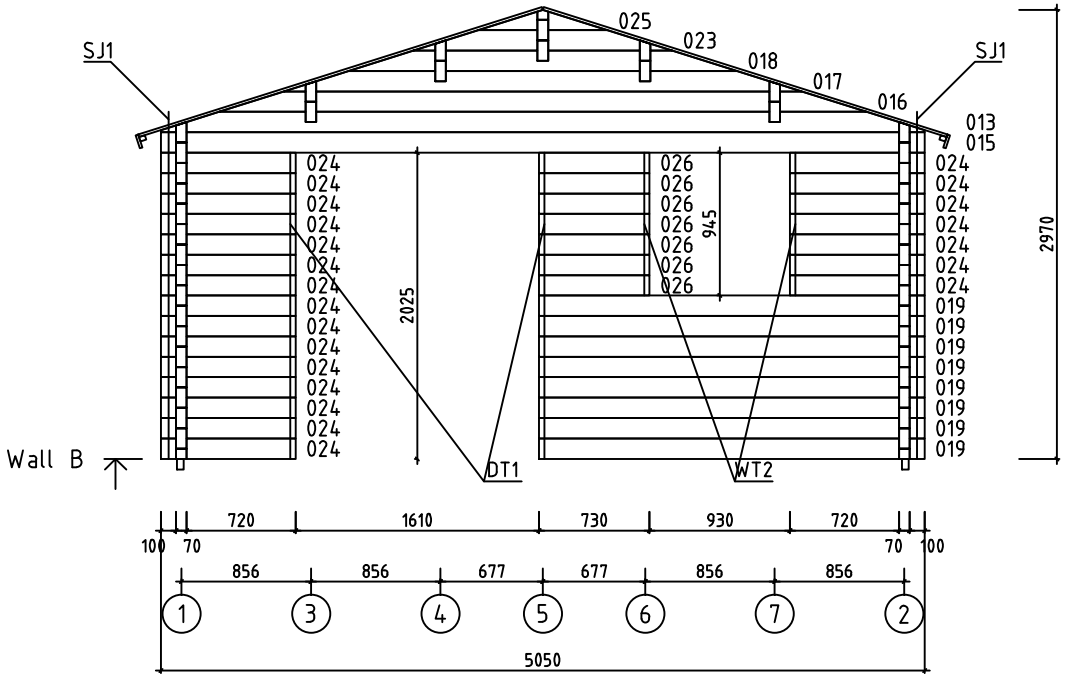

House	Zanzibar 2 70 ISO	Sheet	6
Drawing	WALL B	Scale	1:50
Material	70x135	Date	28.05.2019
Drawer	RP	File	Zanzibar 2 70 ISO.dwg

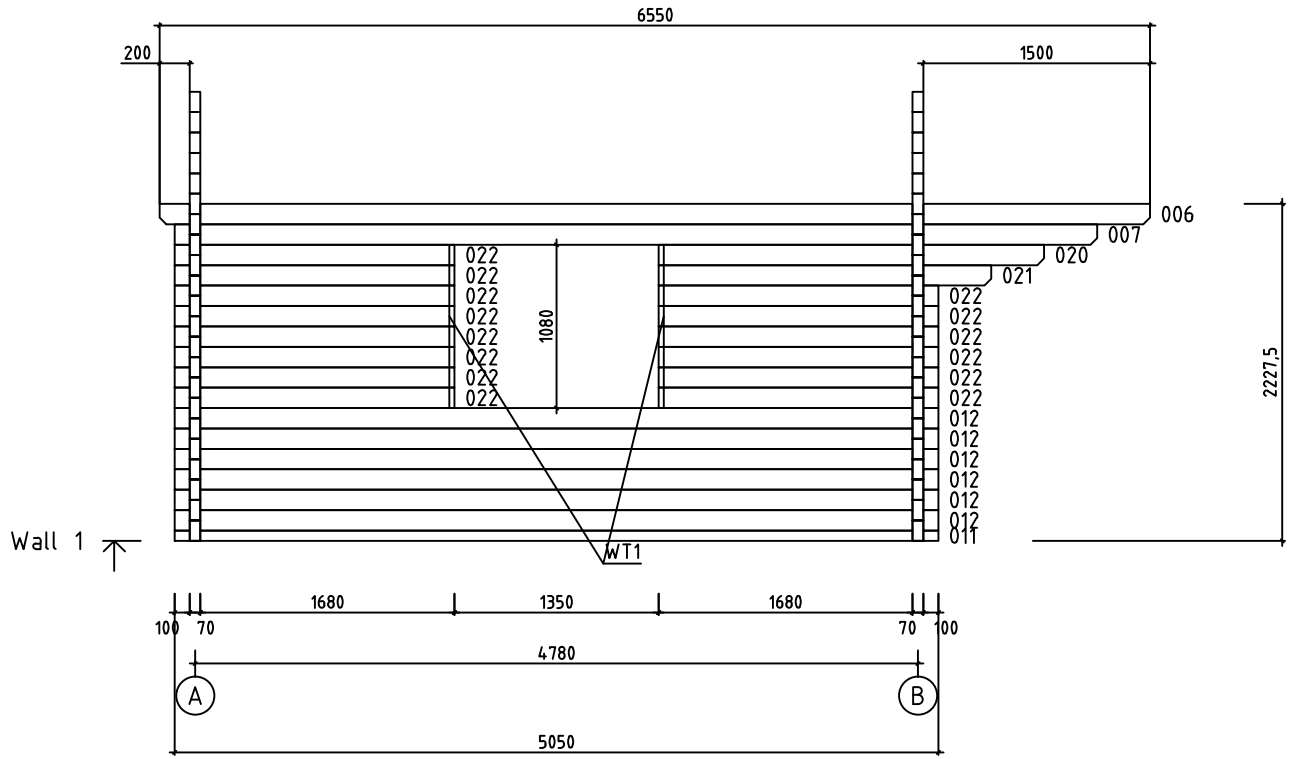

House	Zanzibar 2 70 ISO	Sheet	7
Drawing	WALL 1	Scale	1:50
Material	70x135	Date	28.05.2019
Drawer	RP	File	Zanzibar 2 70 ISO.dwg

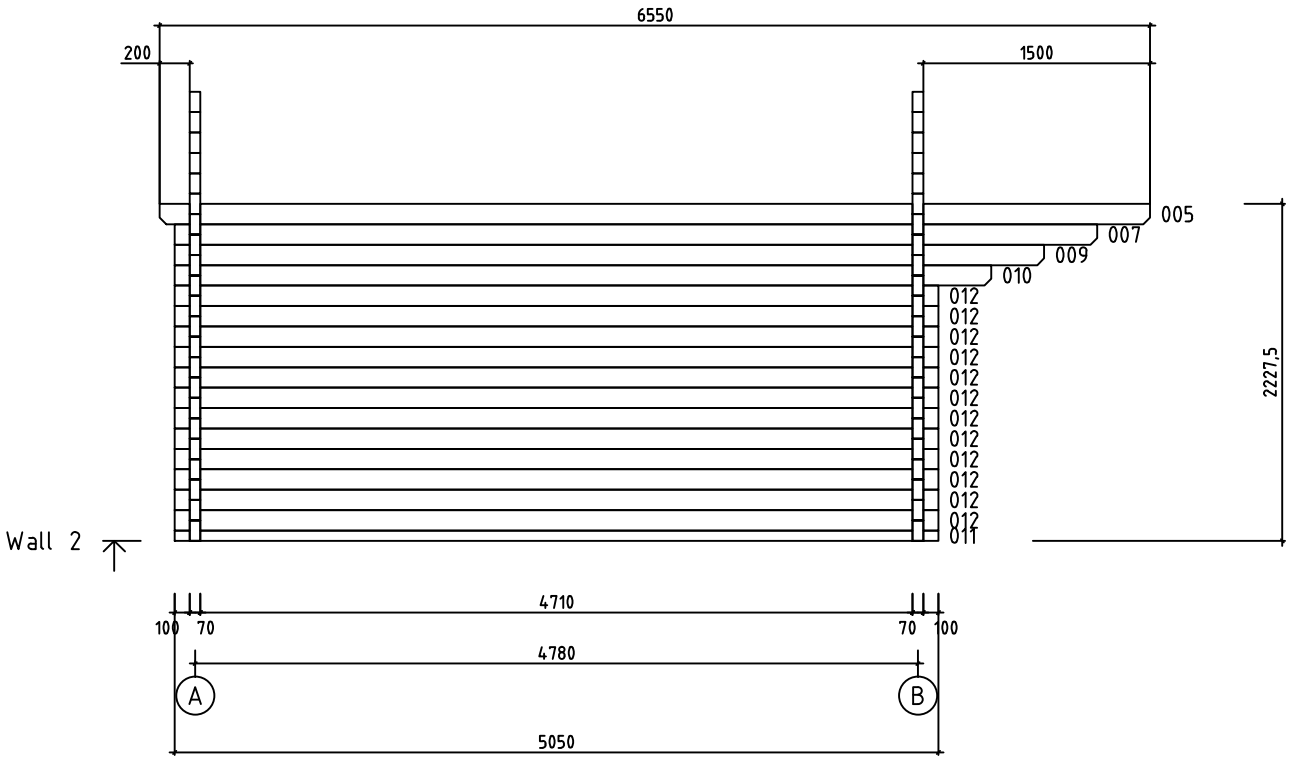

House	Zanzibar 2 70 ISO	Sheet	8
Drawing	WALL 2	Scale	1:50
Material	70x135	Date	28.05.2019
Drawer	RP	File	Zanzibar 2 70 ISO.dwg

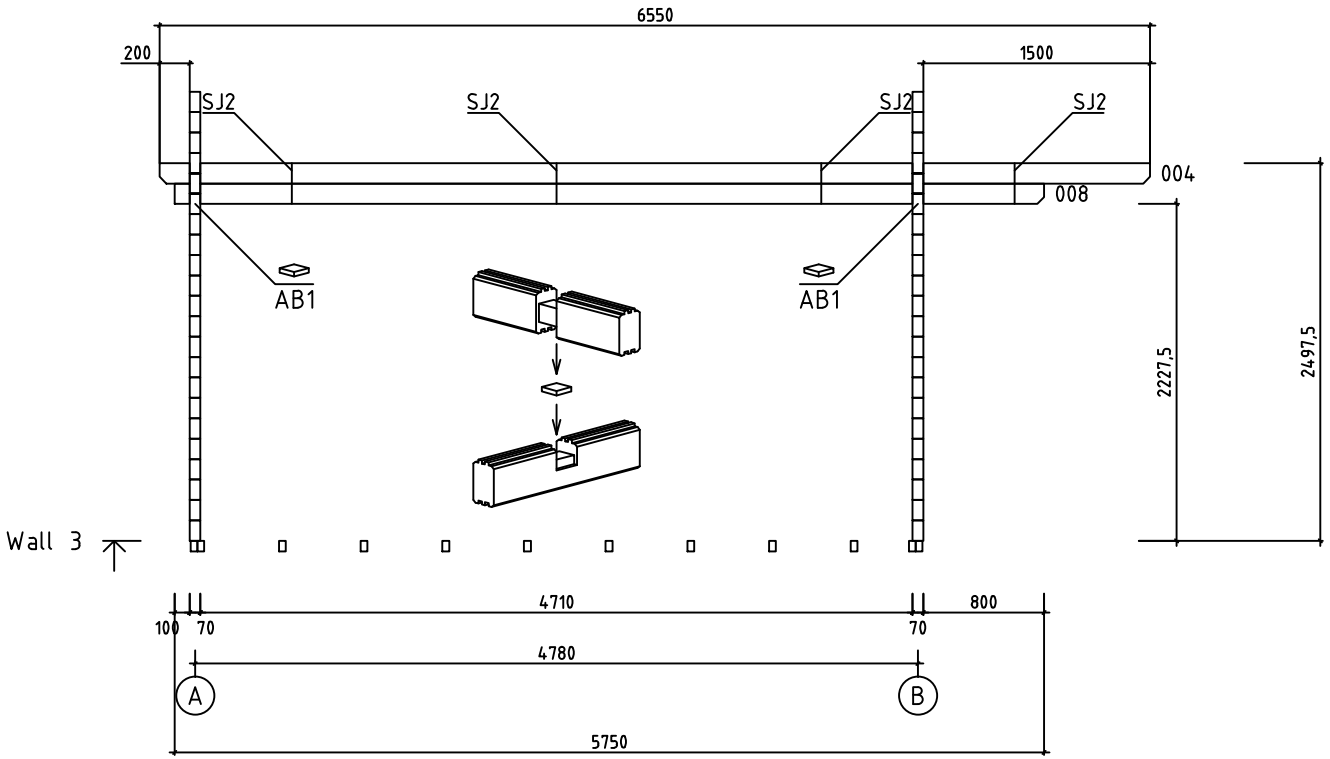

House	Zanzibar 2 70 ISO	Sheet	9
Drawing	WALL 3	Scale	1:50
Material	70x135	Date	28.05.2019
Drawer	RP	File	Zanzibar 2 70 ISO.dwg

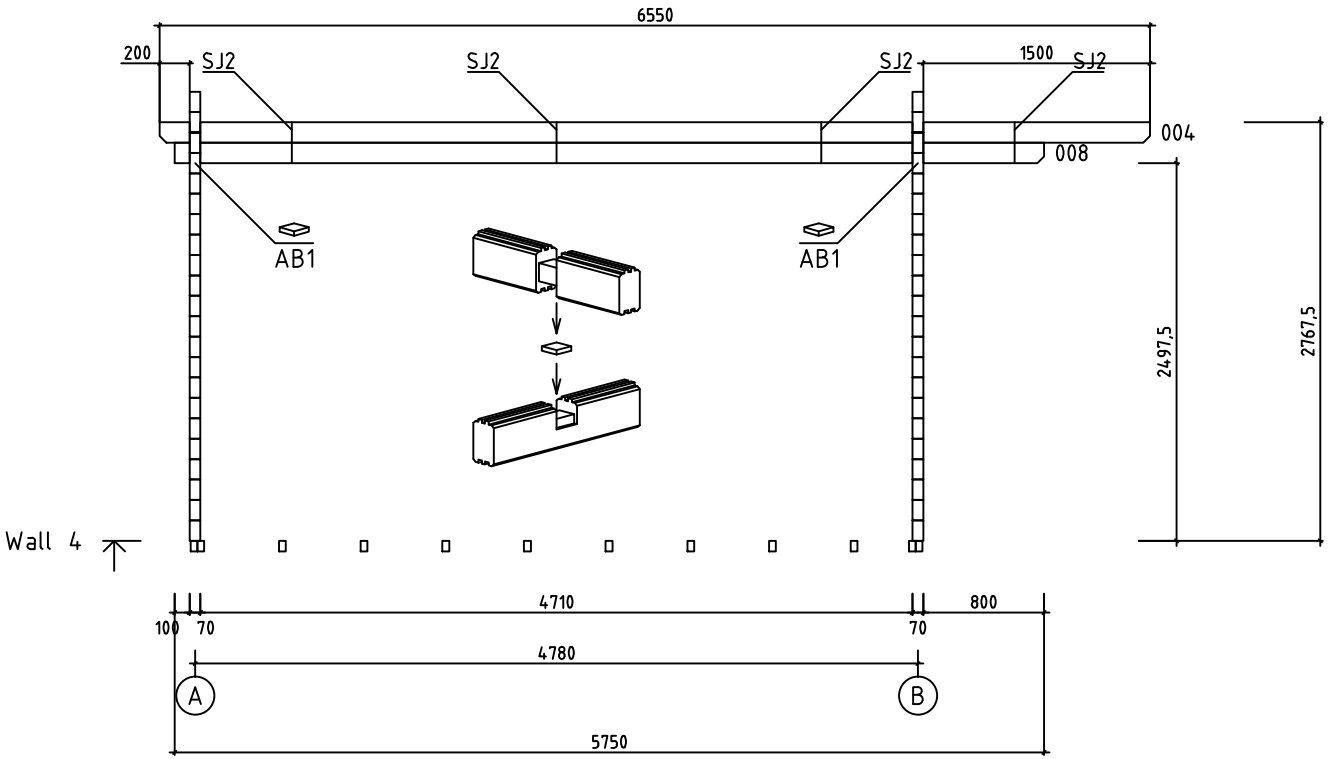

House	Zanzibar 2 70 ISO	Sheet	10
Drawing	WALL 4	Scale	1:50
Material	70x135	Date	28.05.2019
Drawer	RP	File	Zanzibar 2 70 ISO.dwg

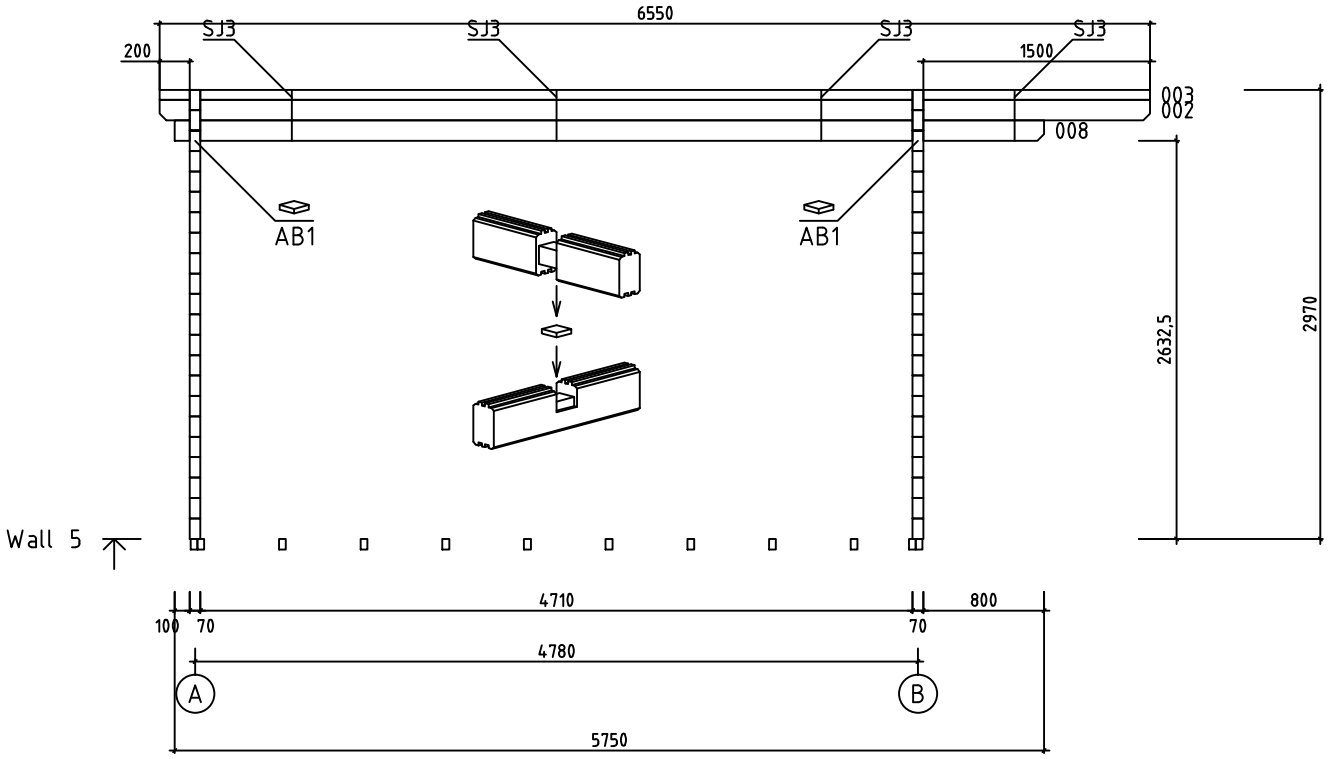

House	Zanzibar 2 70 ISO	Sheet	11
Drawing	WALL 5	Scale	1:50
Material	70x135	Date	28.05.2019
Drawer	RP	File	Zanzibar 2 70 ISO.dwg

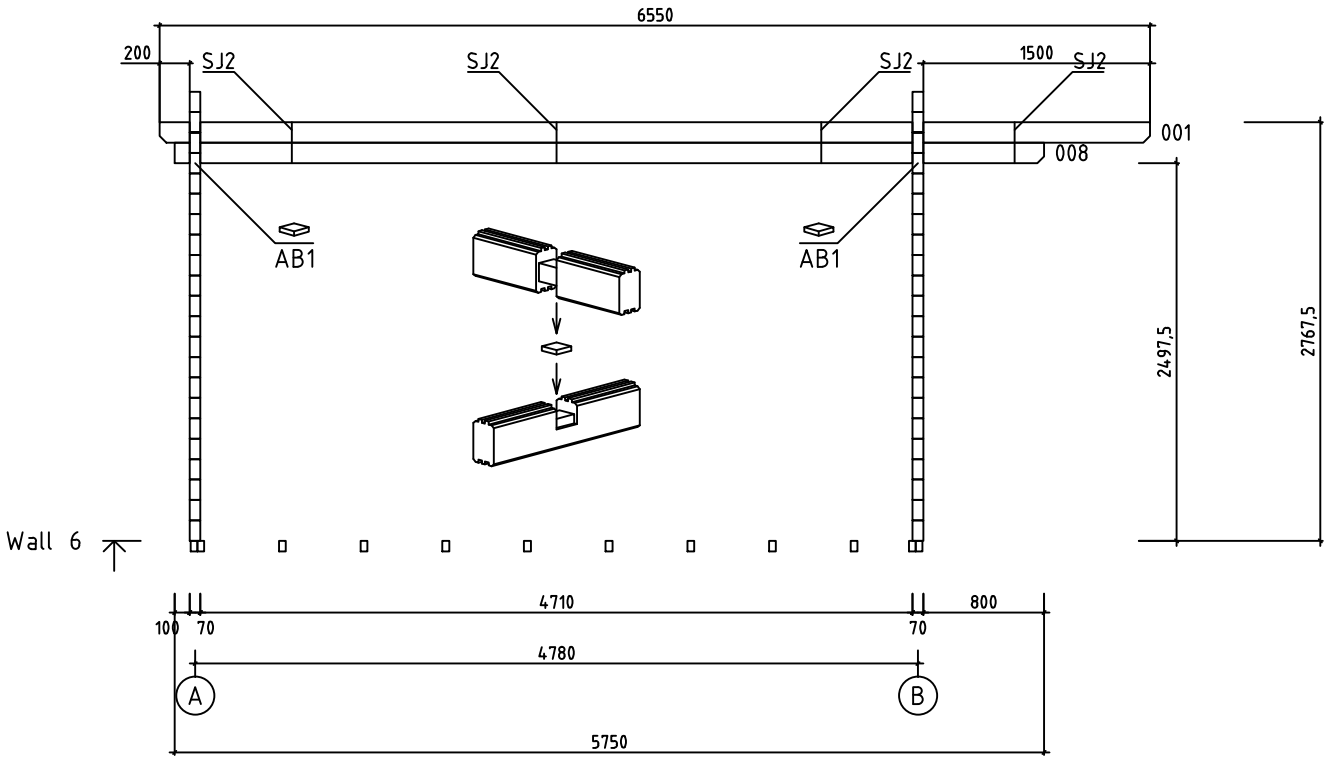

House	Zanzibar 2 70 ISO	Sheet	12
Drawing	WALL 6	Scale	1:50
Material	70x135	Date	28.05.2019
Drawer	RP	File	Zanzibar 2 70 ISO.dwg

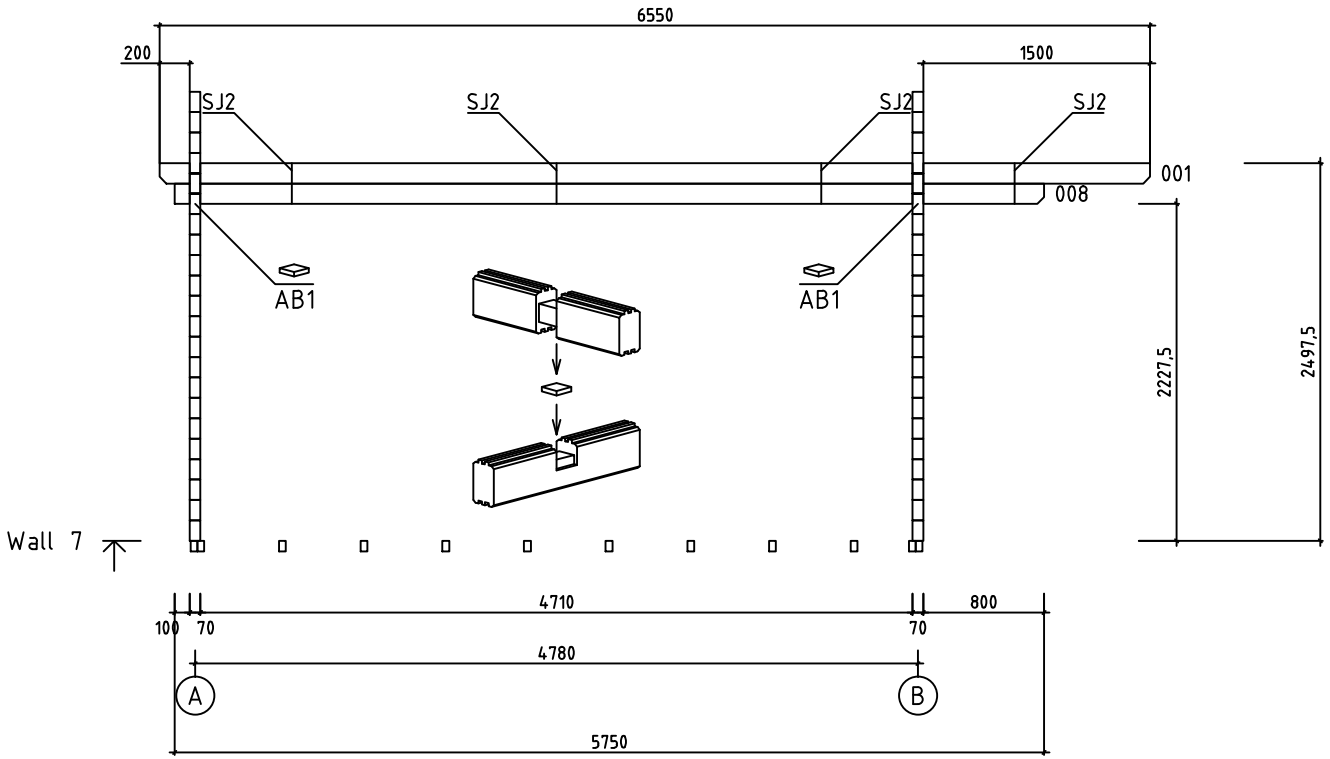

House	Zanzibar 2 70 ISO	Sheet	13
Drawing	WALL 7	Scale	1:50
Material	70x135	Date	28.05.2019
Drawer	RP	File	Zanzibar 2 70 ISO.dwg

Pos	Specification-Bestimmung-Spécification	PCS	Profile (mm)	L (mm)
001	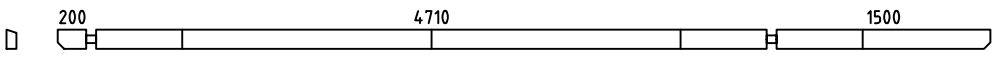	2	70x135	6550
002	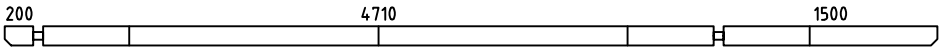	1	70x135	6550
003	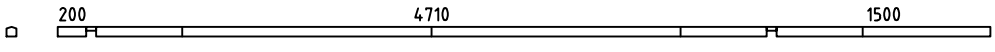	1	70x67	6550
004	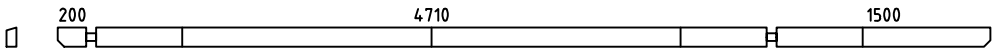	2	70x135	6550
005	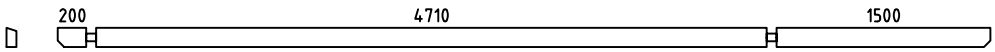	1	70x135	6550
006	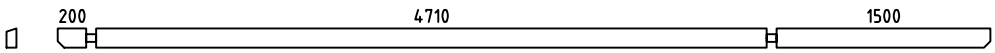	1	70x135	6550
007	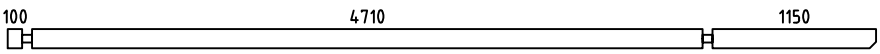	2	70x135	6100
008	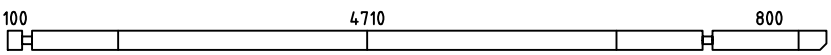	5	70x135	5750
009	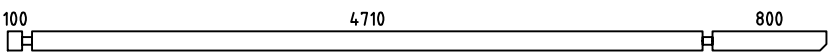	1	70x135	5750
010	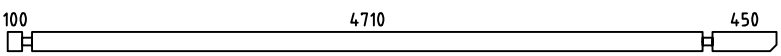	1	70x135	5400
011	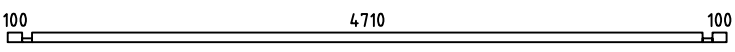	2	70x68	5050
012	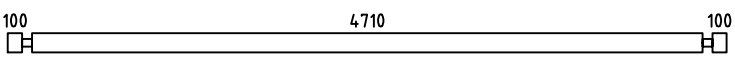	18	70x135	5050
014	SPARE BEAM-ERZATZBOHLE-MADRIER DE RÉSERVE 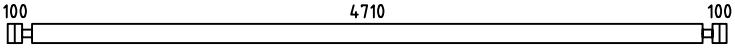	1	70x135	5050
015	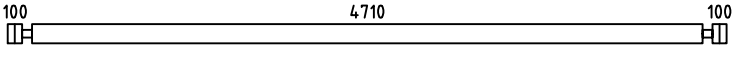	17	70x135	5050
019	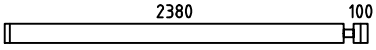	8	70x135	2550
020	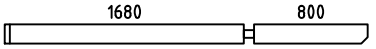	1	70x135	2550
021	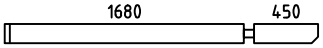	1	70x135	2200
022	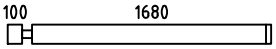	14	70x135	1850
024	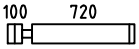	22	70x135	890
026	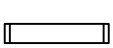	7	70x135	730
WA-1 WB-1	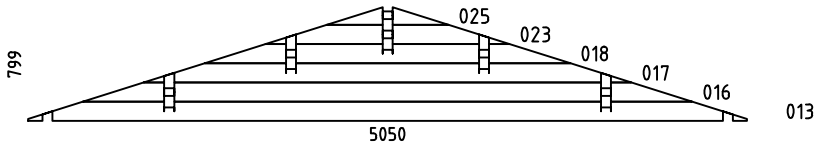	2	70x799	5050
HB	HIT BLOCK-SCHLAGHÖLZER-MADRIERS D´ASSEMBLAGE 	2	70x135	300
FBI2	FLOORBEAMS-FUSSBODENBALKEN-POUTRES DE FONDATION IMPRÉGNÉS IMM	2	45x70	4840
FBI1	FLOORBEAMS-FUSSBODENBALKEN-POUTRES DE FONDATION IMPRÉGNÉS IMM	12	45x70	4750

House Zanzibar 2 70 ISO	Material	File Zanzibar 2 70 ISO.dwg	Sheet 14

Pos	Specification-Bestimmung-Spécification	PCS	Profile (mm)	L (mm)
F1	FLOORBOARD-FUSSBODENBRETT-PLANCHER  or-oder-ou	42+1 55+1	18x114 18x88	4705
R1	ROOFBOARD-DACHBRETT-VOLIGES  or-oder-ou	116+2 150+2	18x114 18x88	2800
FF1	FLOOR FILLET-FUSSBODENLEISTE-BAGUETTE DE FINITION DE PLANCHER 		18x35	19m
GB1	GABLE BOARD-GIEBELBLENDE-PLANCHE DE RIVE 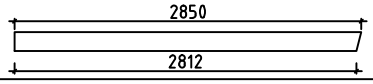	4	18x120	2850
GS1	ROOF FELT FILLET-GIEBELLEISTE-BAGUETTES POUR FIXER LES PLANCHES DE RIVE 	4	18x70	2850
EB1	EAVE BOARD-TRAUFBRETT-LATTES SOUS VOLIGES 	4	18x90	3275
ES1	EAVE SLAT-TRAUFENLEISTE-BAGUETTES POUR FIXER LES LATTES SOUS VOLIGES 	4	30x40	3275
DB1	DIAMOND-RAUTE-ELÉMENTS DE DÉCORATION 	2	18x90	200
DT1	DOOR ASSEMBLING PROFILE-TÜR INSTALLIERUNGSPROFIL -TASSEAU DE FIXATION POUR PORTES 	2	18x25	1970
WT1	WINDOW ASSEMBLING PROFILE-FENSTER INSTALLIERUNGSPROFIL -TASSEAU DE FIXATION POUR FENÉTRE 	2	18x25	1050
WT2	WINDOW ASSEMBLING PROFILE-FENSTER INSTALLIERUNGSPROFIL -TASSEAU DE FIXATION POUR FENÉTRE 	2	18x25	920
AB1	ASSEMBLING BOARD-MONTAGE BOARD-MUR D´ASSEMBLAGE	10	15x52	58
SJ1	SCREW JOINT-GEWINDESTANGE -TIGES FILETÉS 	4	M10	2220
SJ2	SCREW JOINT-GEWINDESTANGE -TIGES FILETÉS 	16	M10	300
SJ3	SCREW JOINT-GEWINDESTANGE -TIGES FILETÉS 	4	M10	360
	NAIL-NAGEL-CLOUS FOR-FÜR-POUR FF1	40	⌀2.0	40
	NAIL-NAGEL-CLOUS FOR-FÜR-POUR COATING FOR ROOF-BESCHICHTUNG FÜR DACH-REVÉTEMENT DE TOIT	530	⌀2.5	20
	NAIL-NAGEL-CLOUS FOR-FÜR-POUR F1, R1 	1170	⌀2.5	60
	SCREWS-SCHRAUBEN-VIS FOR-FÜR-POUR GB1, GS1, EB1, ES1, DB1 	100	⌀4.5	50
	SCREWS-SCHRAUBEN-VIS FOR-FÜR-POUR 011 FBI1, FBI2 	70	⌀4.5	90
	SCREWS-SCHRAUBEN-VIS FOR-FÜR-POUR WA-1, WB-1 	30	⌀6.0	160
	COATING FOR ROOF-BESCHICHTUNG FÜR DACH-REVÉTEMENT DE TOIT 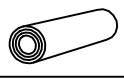	4,0	R = 15m	

House Zanzibar 2 70 ISO	Material	File Zanzibar 2 70 ISO.dwg	Sheet 15

Pos	Specification-Bestimmung-Spécification	PCS	Profile (mm)	L (mm)
	DOUBLEDOOR-DOPPELTÜR-DOUBLE PORTE (left-links-gauche) ORT__1H V	1	1600	1970
	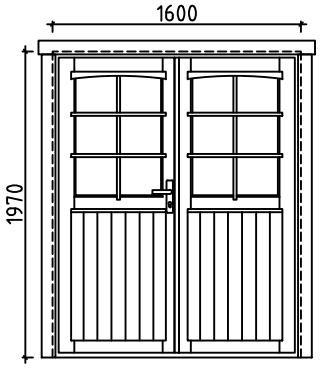 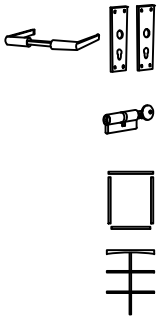	1 1 1 2		
	DOUBLE WINDOW-DOPPEL FENSTER-DOUBLE FENÉTRE (right-rechts-droit) ORT__1H P	1	1340	1050
	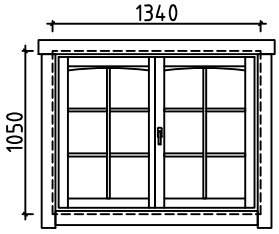 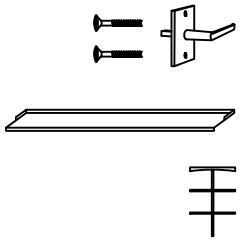	1 1 2		
	WINDOW-FENSTER-FENÉTRE (left-links-gauche) ORT__1H V	1	920	920
	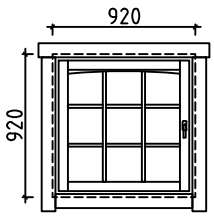 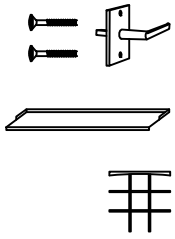	1 1 1 1		

House Zanzibar 2 70 ISO	Material	File Zanzibar 2 70 ISO.dwg	Sheet 16

#001	6,7	6550	2
#002	5	6550	1
#003	5	6550	1
#004	3,4	6550	2
#005	2	6550	1
#006	1	6550	1
#007	1,2	6100	2
#008	3,4,5,6,7	5750	5
#009	2	5750	1
#010	2	5400	1
#011	1,2	5050	2
#012	1,2	5050	18
#013	A,B	5050	2
#014		5050	1
#015	A,B	5050	17
#016	A,B	4282	2
#017	A,B	3425	2
#018	A,B	2569	2
#019	B	2550	8
#020	1	2550	1
#021	1	2200	1
#022	1	1850	14
#023	A,B	1713	2
#024	B	890	22
#025	A,B	856	2
#026	B	730	7