Amy-A

OWNER'S MANUAL /
Instructions for Assembly

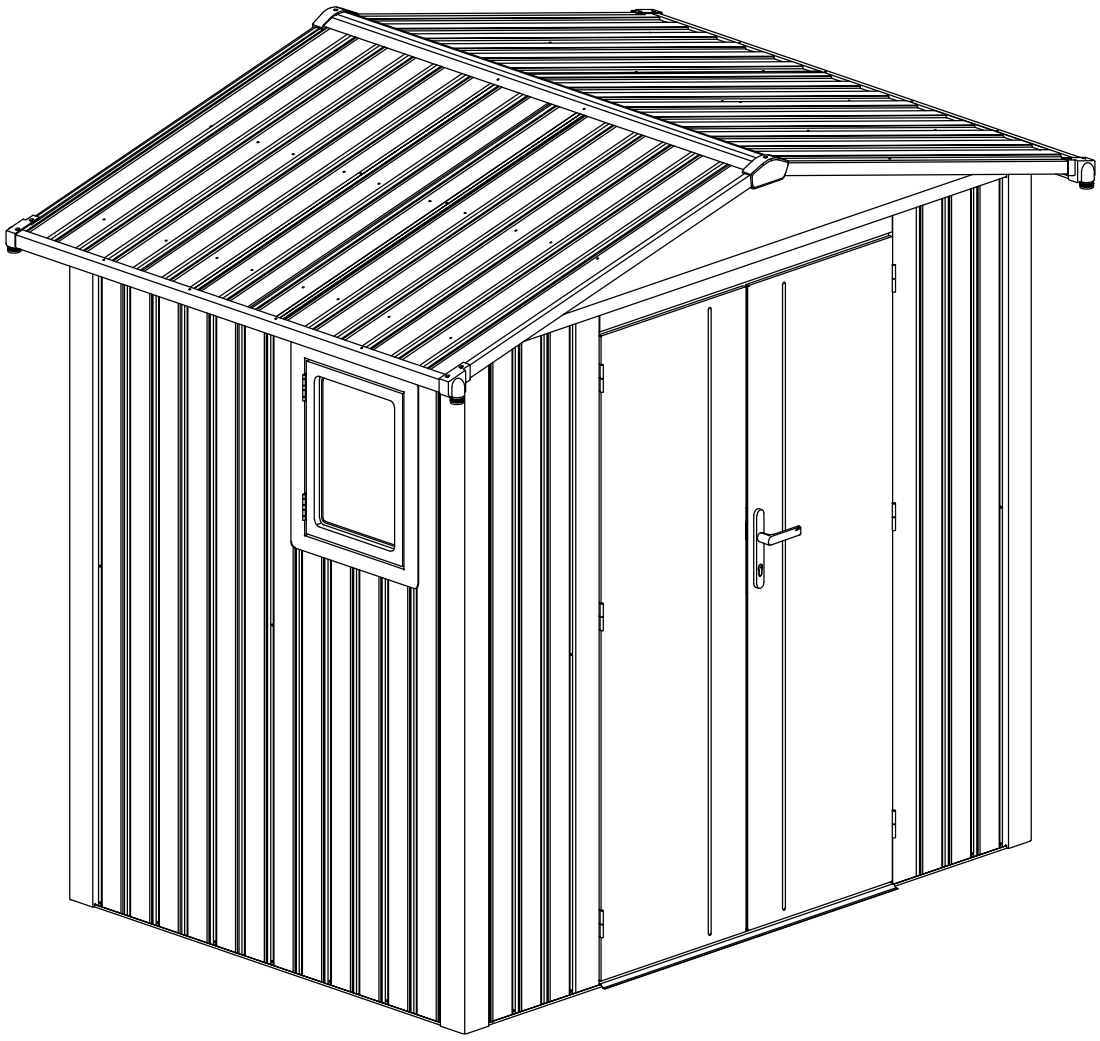

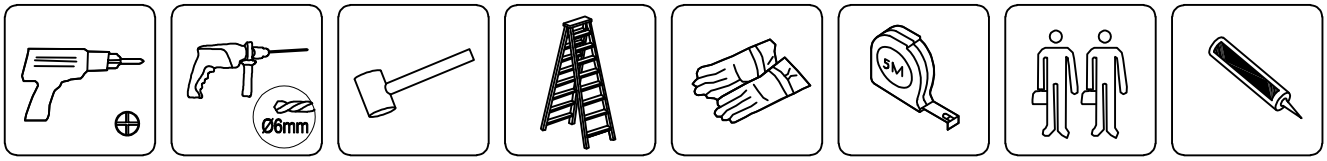

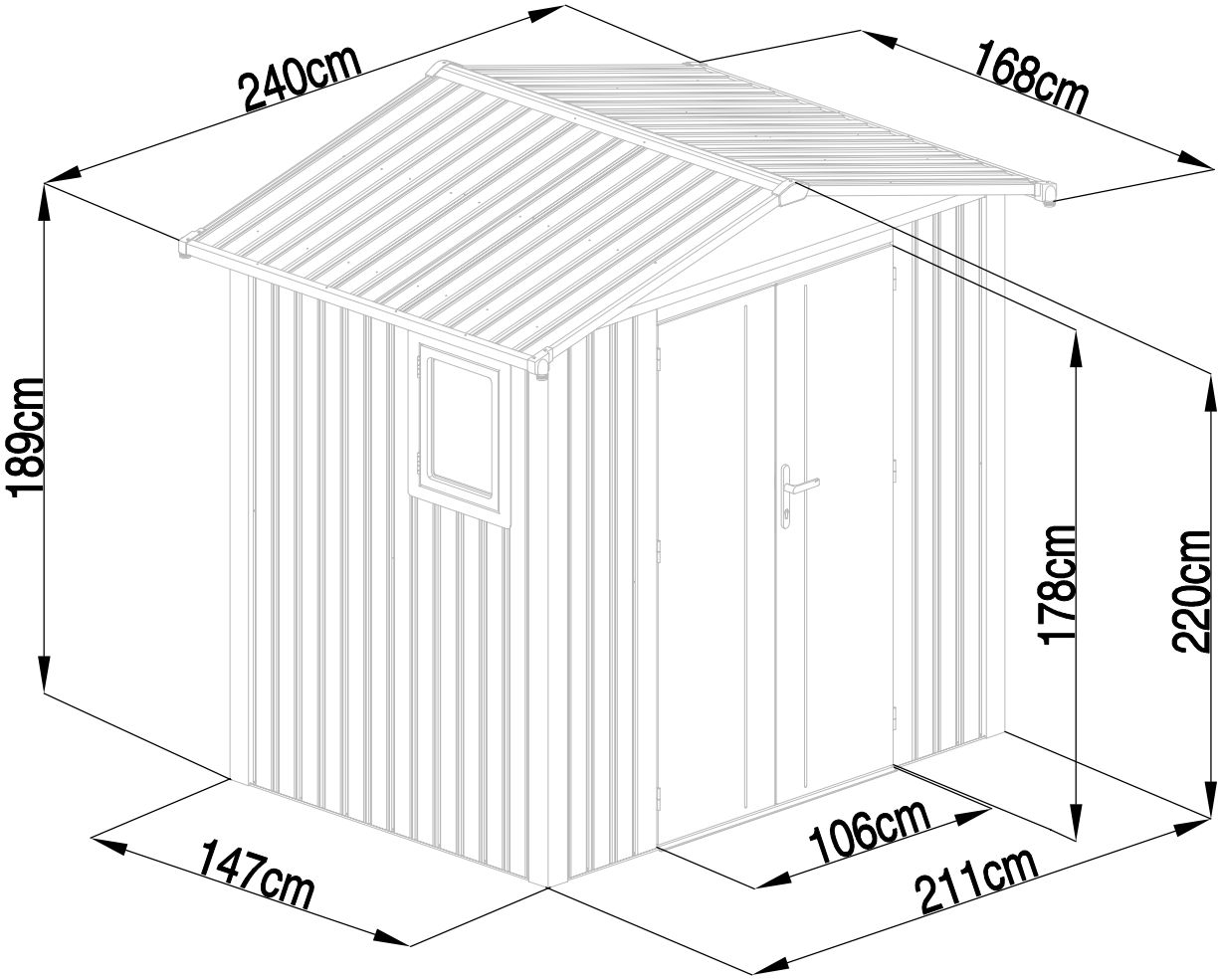

Area of installation requirement:

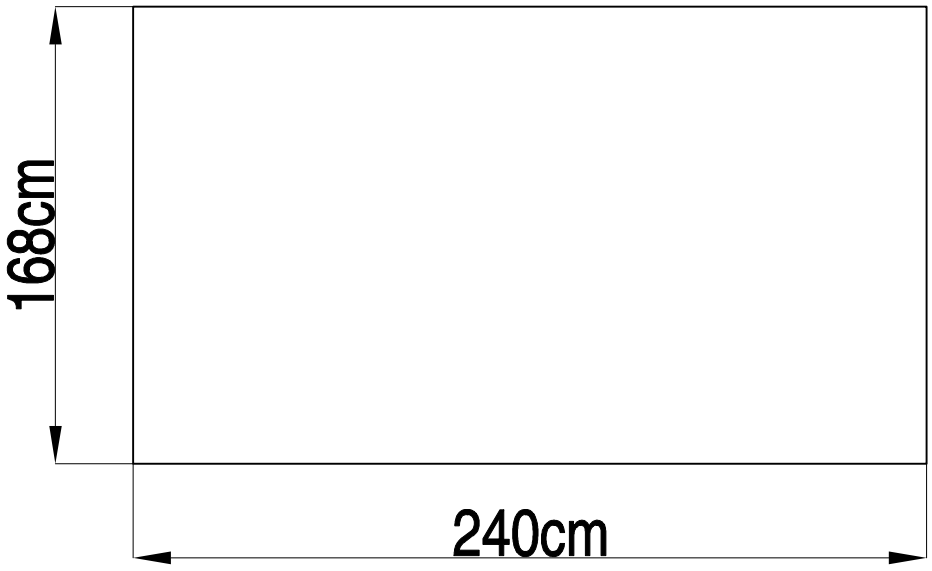

Amy-A:

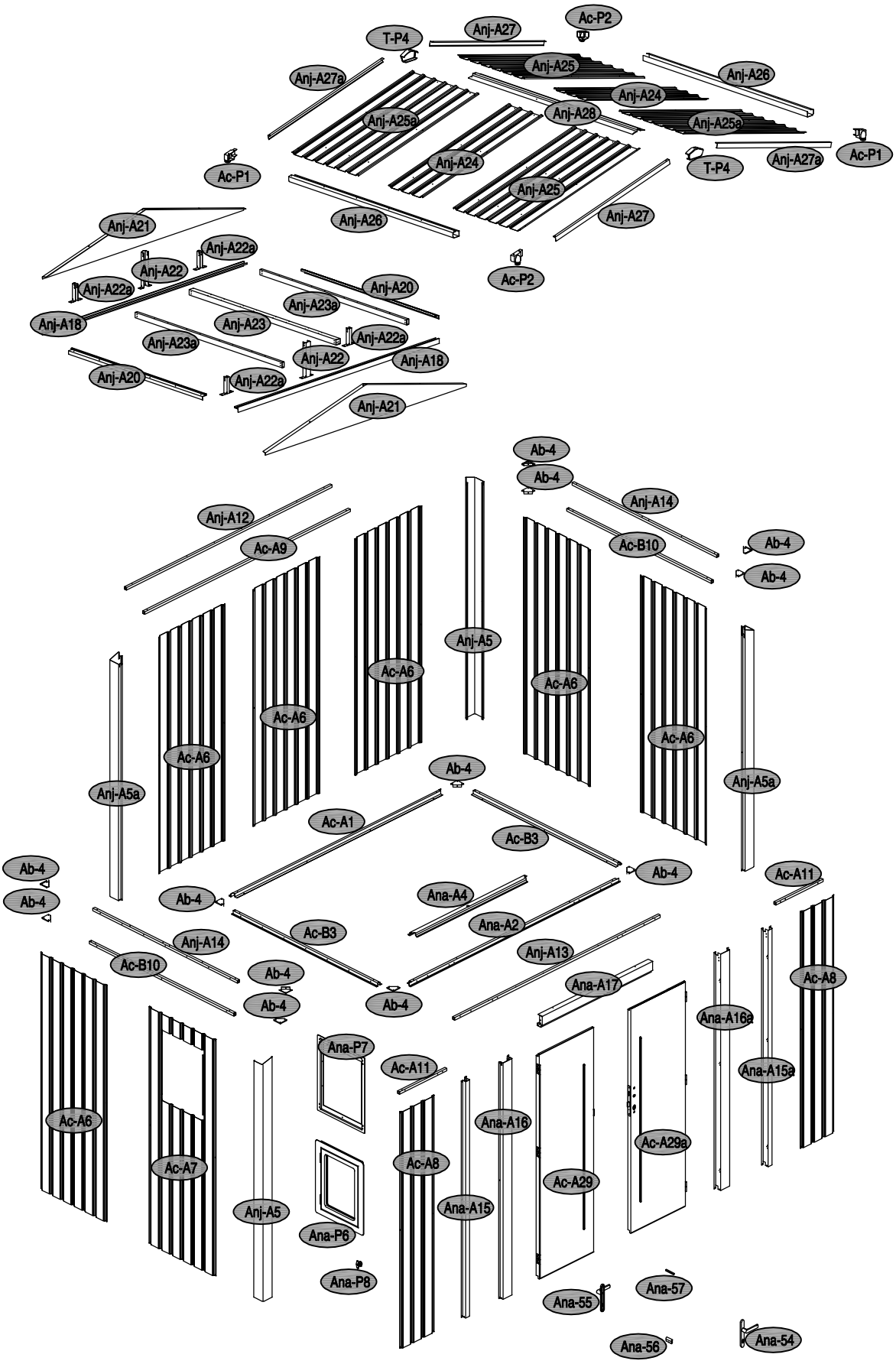
Ac-P2
T-P4
Anj-A27
Anj-A25
Anj-A26
Anj-A27a
Anj-A24
Anj-A28
Anj-A25a
Anj-A25a
Anj-A24
Anj-A27a
Ac-P1
T-P4
Ac-P1
Anj-A25
Anj-A26
Anj-A27
Anj-A21
Anj-A22a
Anj-A22
Ac-P2
Anj-A22a
Anj-A20
Anj-A23a
Anj-A18
Anj-A23
Anj-A22a
Anj-A23a
Anj-A22
Anj-A18
Anj-A20
Anj-A22a
Anj-A21
Ab-4
Ab-4
Anj-A14
Anj-A12
Ac-B10
Ab-4
Ac-A9
Ab-4
Anj-A5
Ac-A6
Ac-A6
Ac-A6
Ac-A6
Ac-A6
Anj-A5a
Anj-A5a
Ab-4
Ac-A1
Ac-B3
Ab-4
Ac-A11
Ab-4
Ab-4
Ana-A4
Ana-A2
Ac-B3
Anj-A14
Anj-A13
Ac-B10
Ab-4
Ana-A17
Ac-A8
Ab-4
Ab-4
Ana-A16a
Ana-P7
Ac-A11
Ana-A15a
Ac-A6
Ana-A16
Ac-A29a
Ac-A8
Ac-A7
Ac-A29
Ana-A15
Anj-A5
Ana-P6
Ana-P8
Ana-55
Ana-57
Ana-56
Ana-54

NO.	IMAGE	mm	QTY
UNDER			
Ac-A1	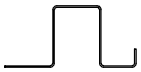	2064	x1
Ana-A2		2064	x1
Ac-B3		1425	x2
Ana-A4		1130	x1
MIDDLE			
Anj-A5		1925	x2
Anj-A5a		1925	x2
Ac-A6		1900	x6
Ac-A7		1900	x1
Ac-A8		1900	x2
Ac-A9	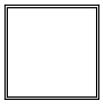	2024	x1
Ac-B10		1424	x2
Ac-A11		464	x2
Anj-A12		2024	x1
Anj-A13		2024	x1
Anj-A14		1424	x2
Ana-A15		1900	x1
Ana-A15a		1900	x1
Ana-A16	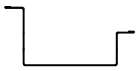	1900	x1
Ana-A16a		1900	x1
Ana-A17		1087.5	x1
Anj-A18		1980	x2
Anj-A22		263	x2
Anj-A22a		125	x4
Anj-A23		1446	x1
Anj-A23a		1446	x2
Anj-A21		1980	x2
Anj-A20		1320	x2
DOOR			
Ac-A29		1804	x1
Ac-A29a		1804	x1
TOP			
Anj-A24		1222	x2
Anj-A25		1222	x2
Anj-A25a		1222	x2
Anj-A26		1617.5	x2
Anj-A27		1158.5	x2
Anj-A27a		1158.5	x2
Anj-A28		1617.5	x1

NO.	IMAGE	mm	QTY
ANNEX			
Ab-4			x12
Anj-A37			4M
Ac-P1			x2
Ac-P2			x2
T-P4			x2
Ana-P6			x1
Ana-P7			x1
Ana-P8			x1
Ab-50			x6
Ana-54			x1
Ana-55			x1
Ana-56			x1
Ana-57			x1
Ana-58		M5x45	x3
Anj-A40			x157
Anj-A41		ST4x10	x279
Ana-A42		ST4x10	x2
Anj-A43		M4x10	x18
Anj-A44		M5x8	x4
Anj-A45		ST4x25	x14
Anj-A46		ST4x16	x4

1				
	Ac-A1 x1	Ana-A2 x1	Ac-B3 x2	

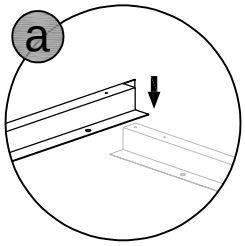

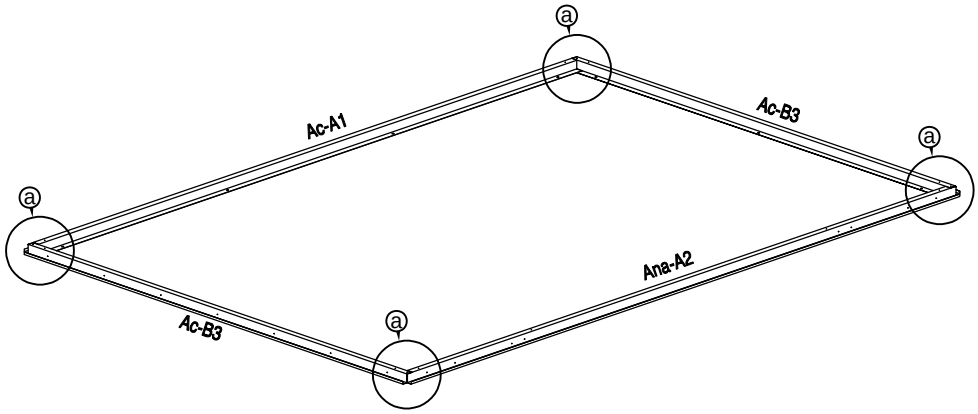

2			
	Ab-4 x4	Anj-A41 x12	

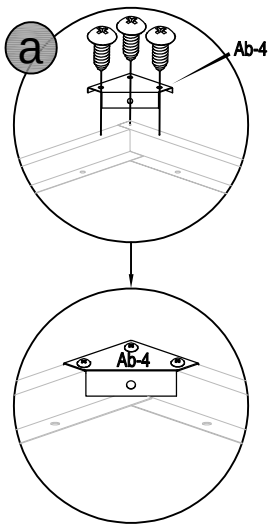

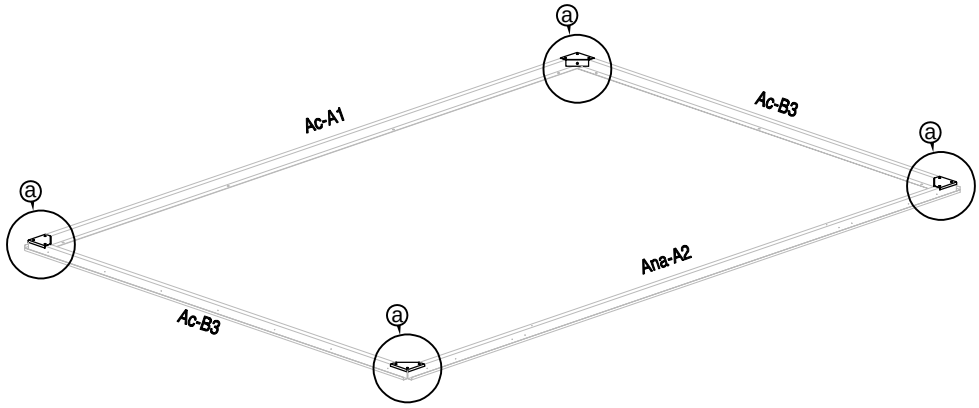

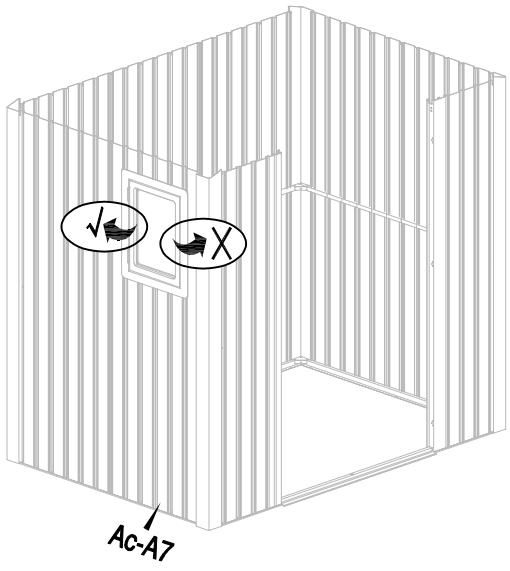

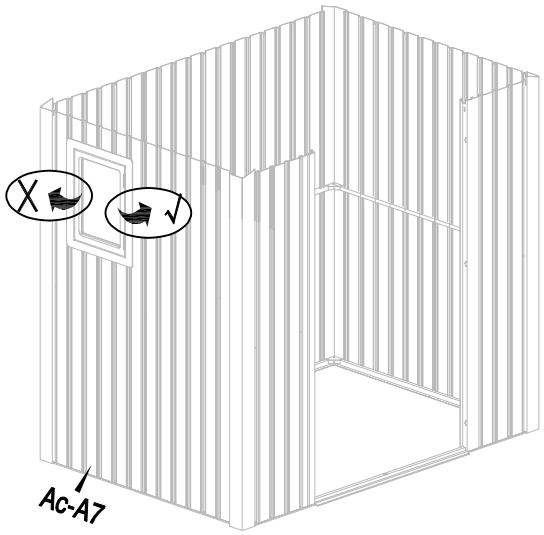

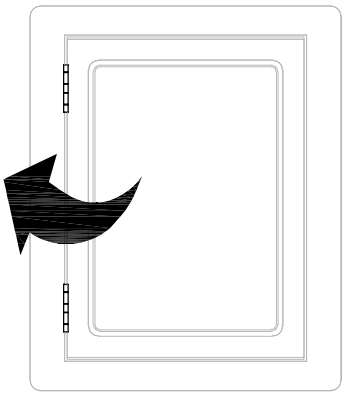

Or

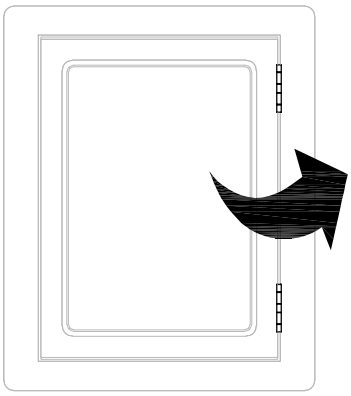

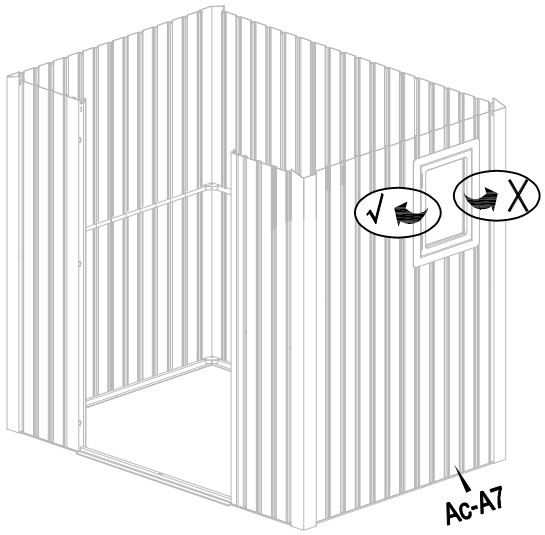

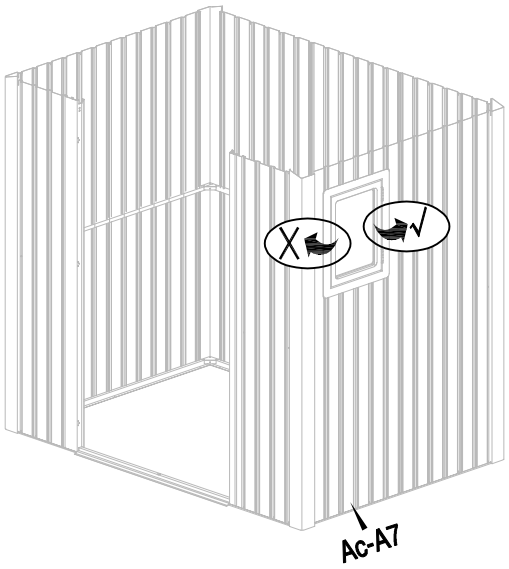

3						
	Ac-A7 x1	Anj-A5 x1	Ac-B10 x1	Anj-A41 x5	Anj-A40 x5	

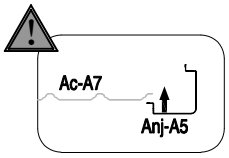

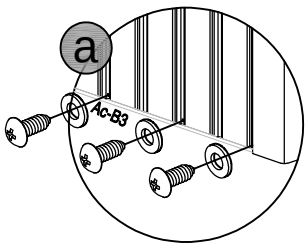

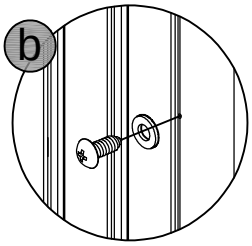

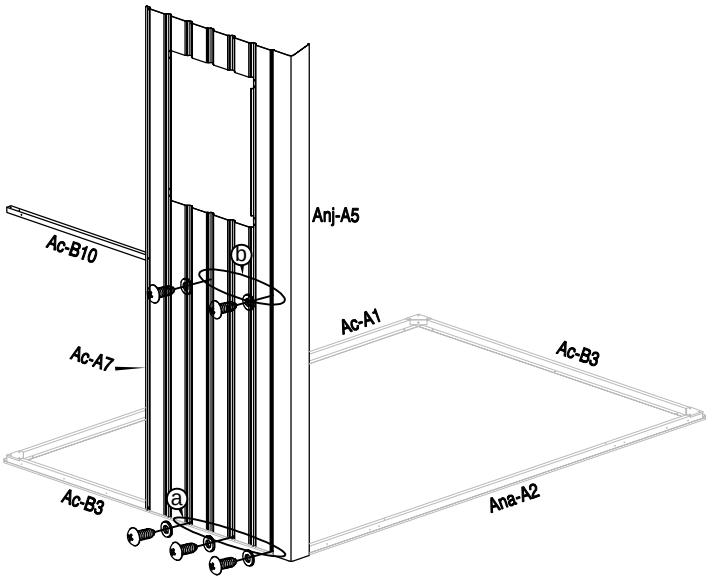

4					
	Ac-A8 x1	Ac-A11 x1	Anj-A41 x3	Anj-A40 x3	

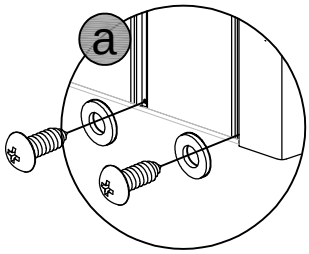

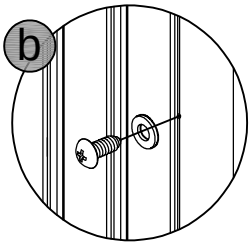

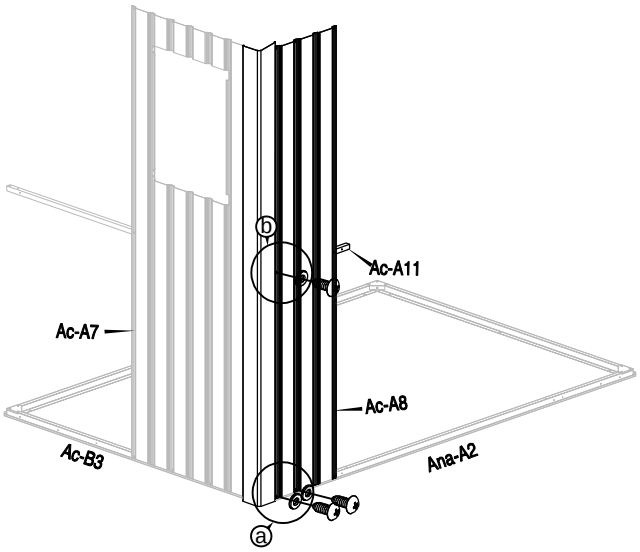

5					
	Ac-A6 x1	Anj-A5a x1	Anj-A41 x7	Anj-A40 x7	

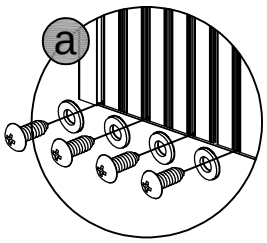

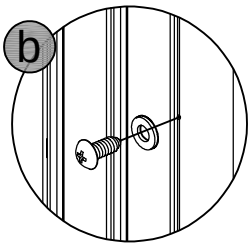

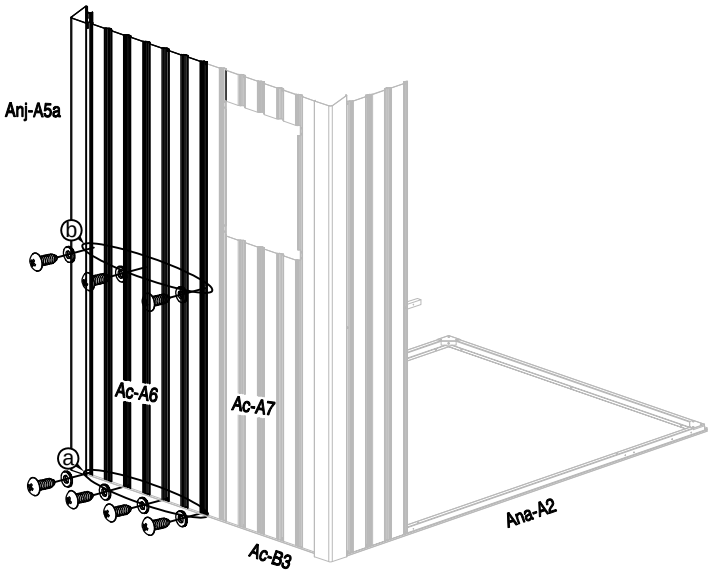

6					
	Ac-A6 x1	Ac-A9 x1	Anj-A41 x5	Anj-A40 x5	

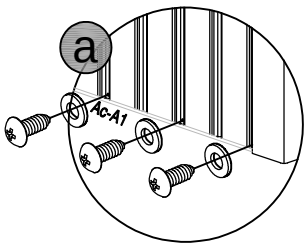

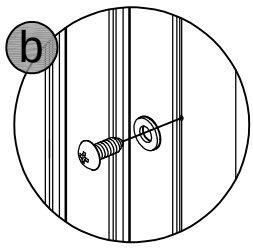

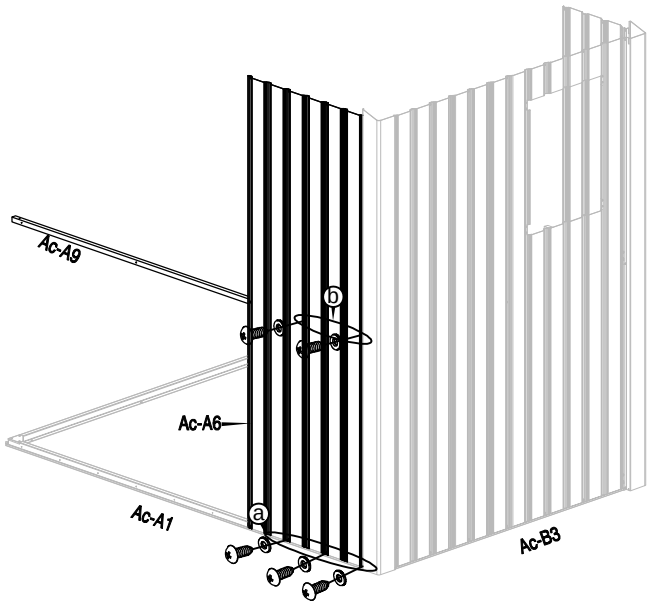

7				
	Ac-A6 x1	Anj-A41 x5	Anj-A40 x5	

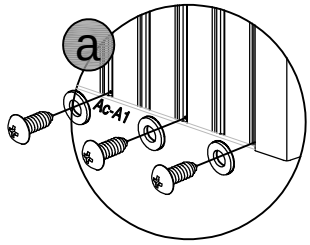

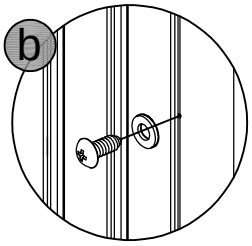

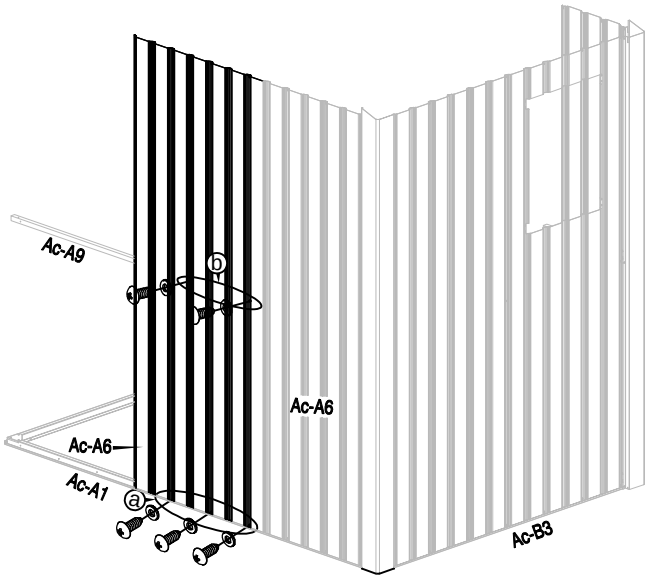

8					
	Ac-A6 x1	Anj-A5 x1	Anj-A41 x7	Anj-A40 x7	

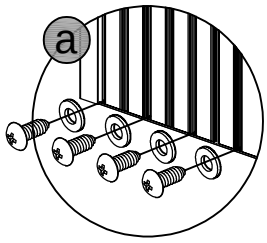

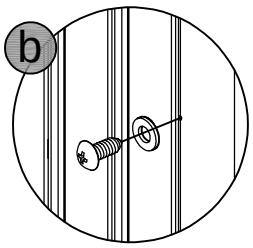

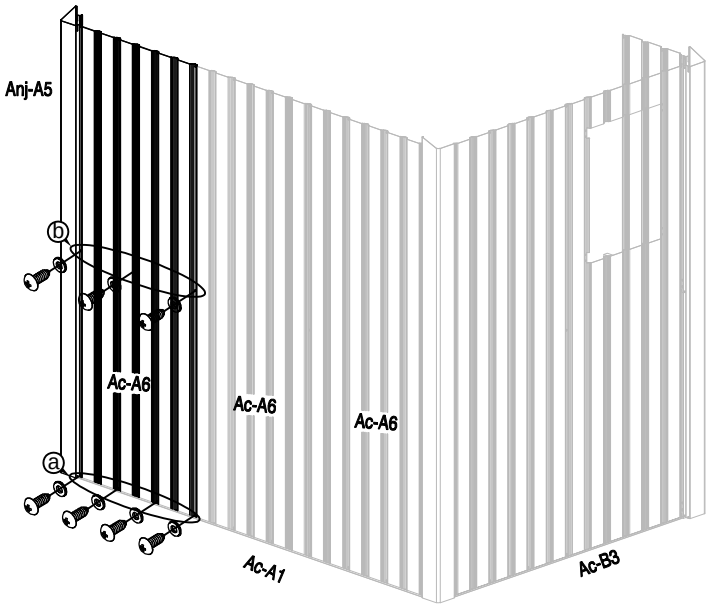

9	Ac-A6 x1	Ac-B10 x1	Anj-A41 x5	Anj-A40 x5	

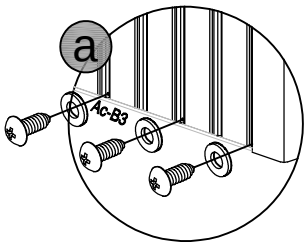

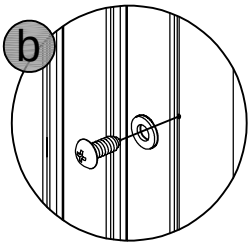

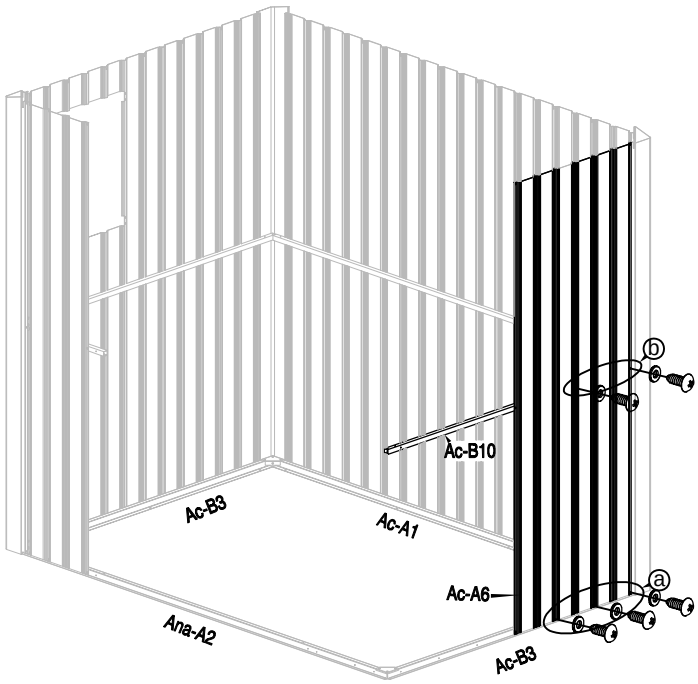

10	Ac-A6 x1	Anj-A5a x1	Anj-A41 x7	Anj-A40 x7	

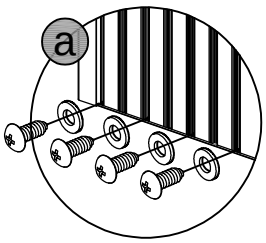

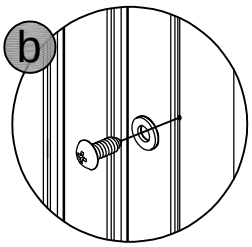

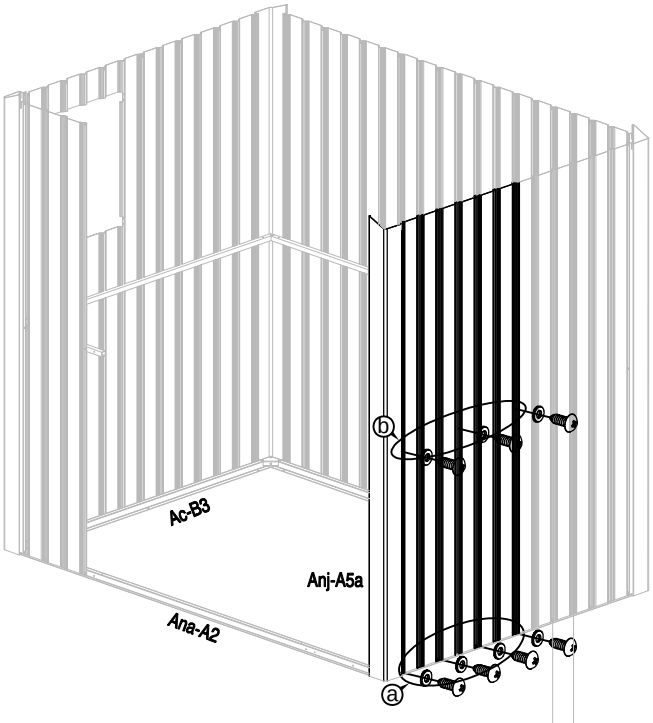

11					
	Ac-A8 x1	Ac-A11 x1	Anj-A41 x3	Anj-A40 x3	

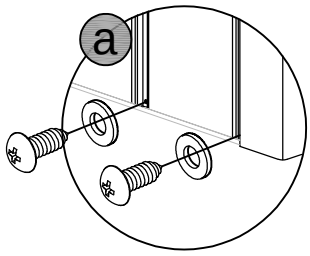

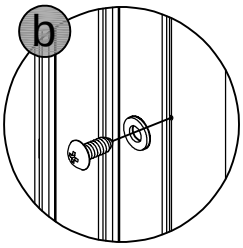

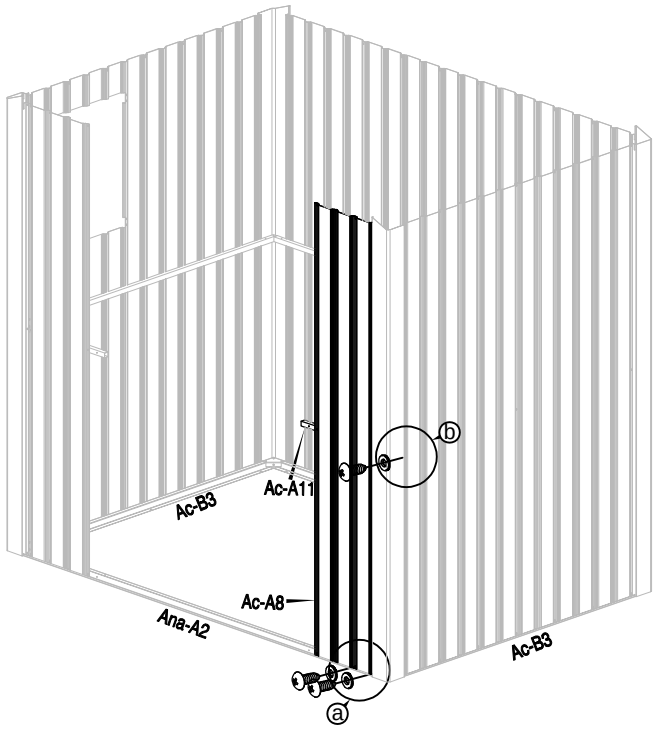

12			
	Ab-4 x4	Anj-A41 x12	

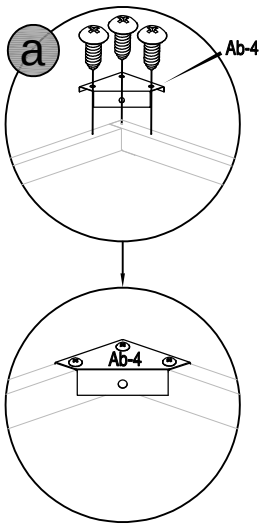

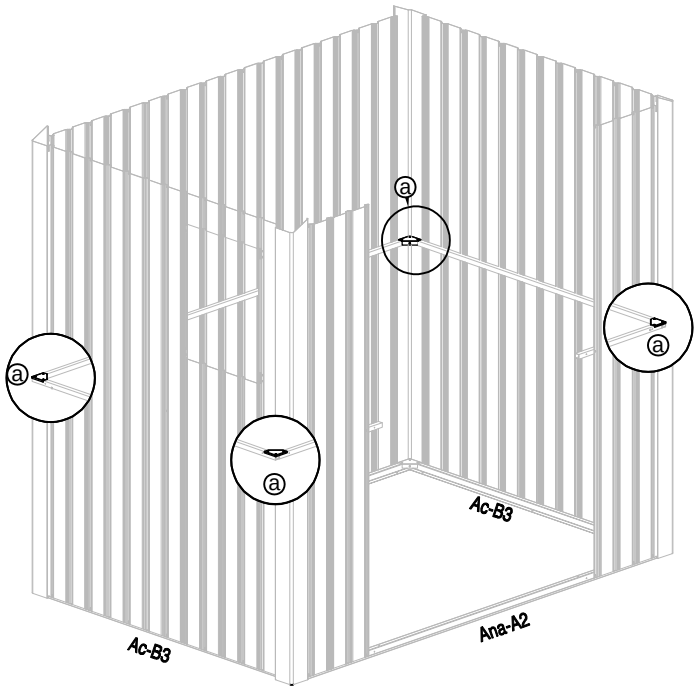

13					
	Anj-A13 x1	Anj-A14 x1	Anj-A41 x11	Anj-A40 x11	

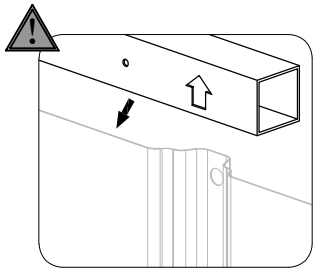

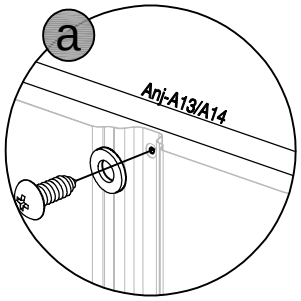

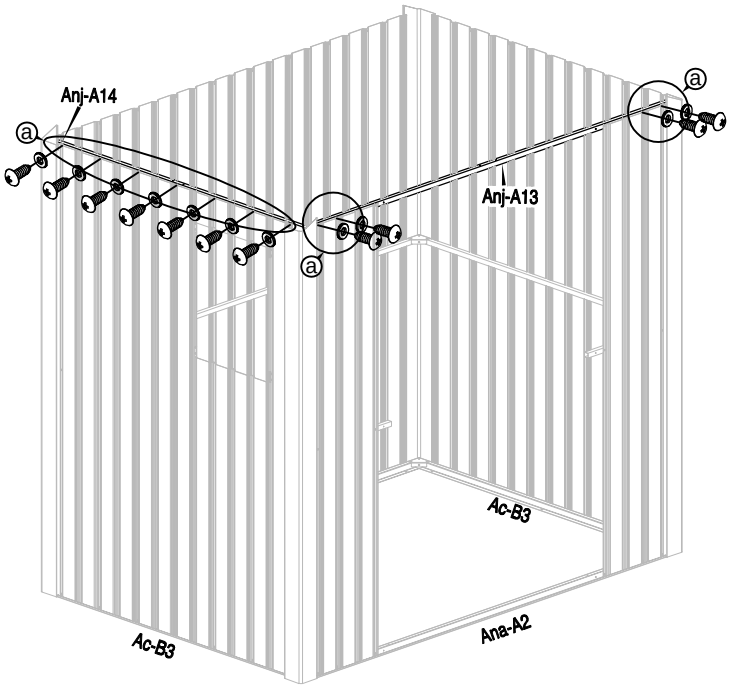

14					
	Anj-A12 x1	Anj-A14 x1	Anj-A41 x17	Anj-A40 x17	

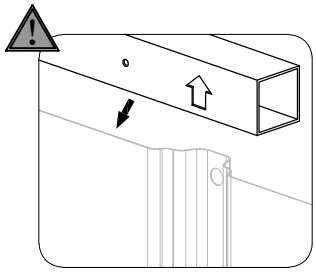

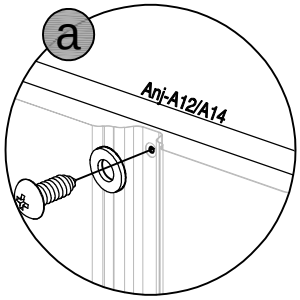

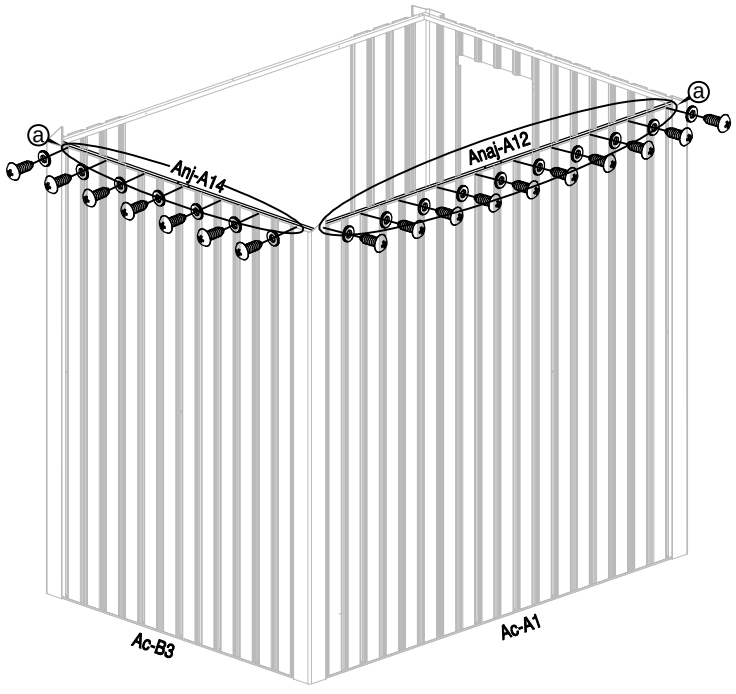

15

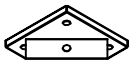

Ab-4 x4



Anj-A41 x12

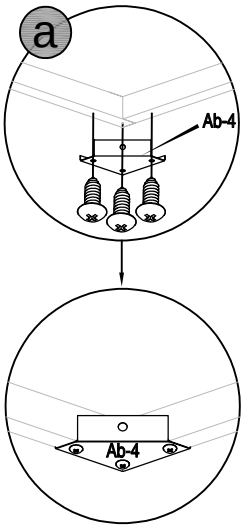

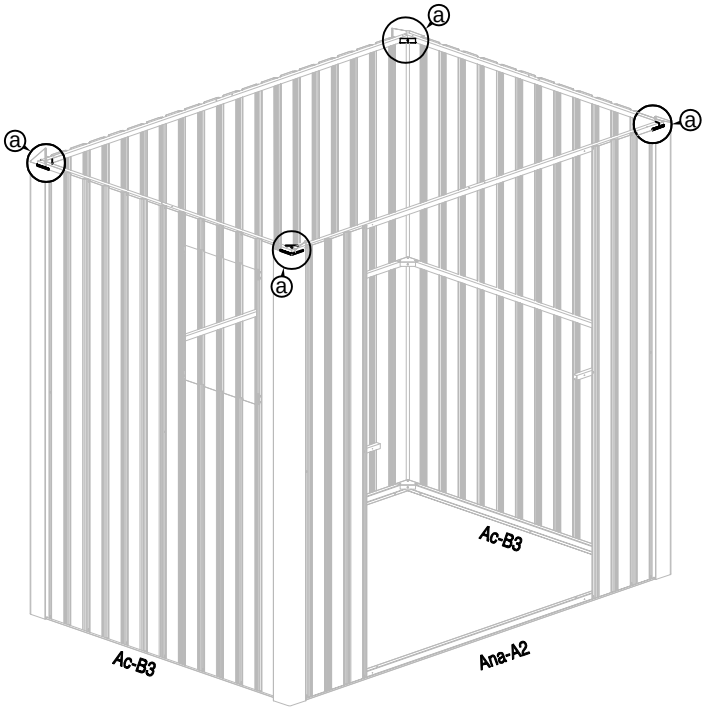

16



Ana-A4 x1



Anj-A41 x4

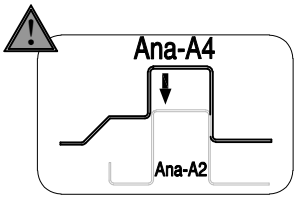

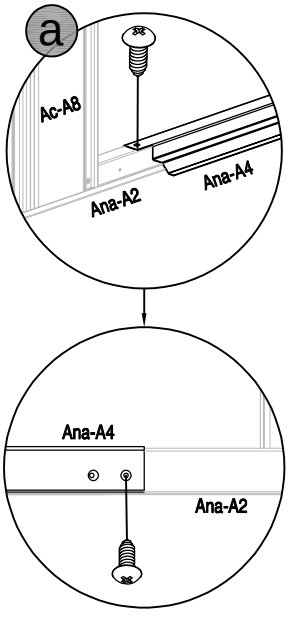

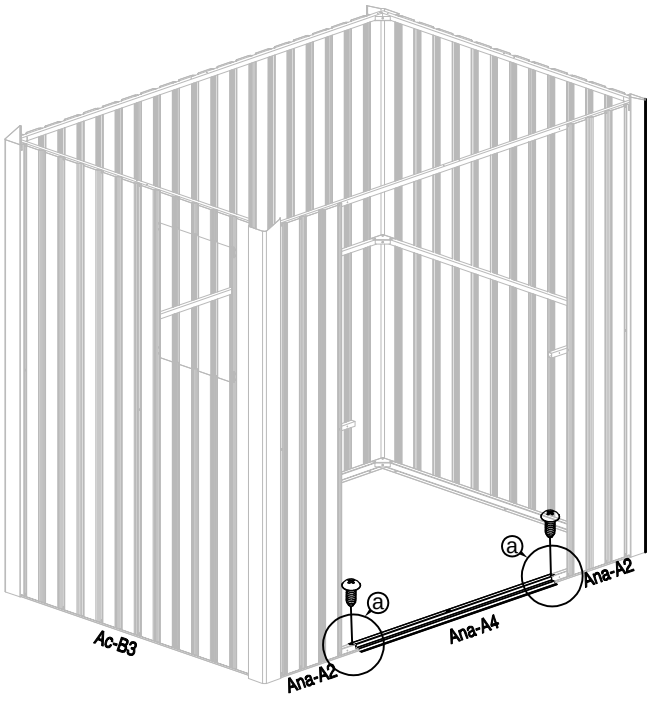

17

Ana-A15 x1	Ana-A15a x1	Anj-A41 x6

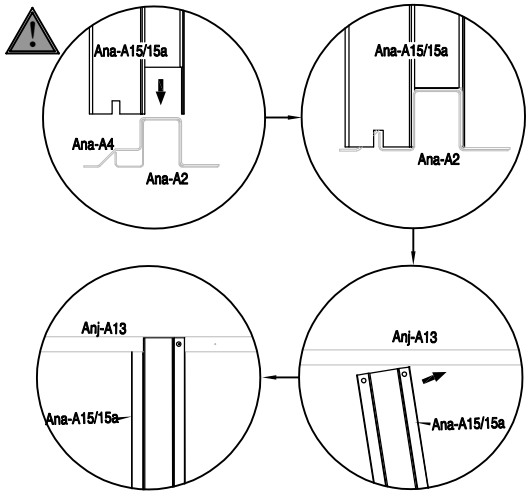

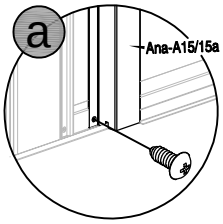

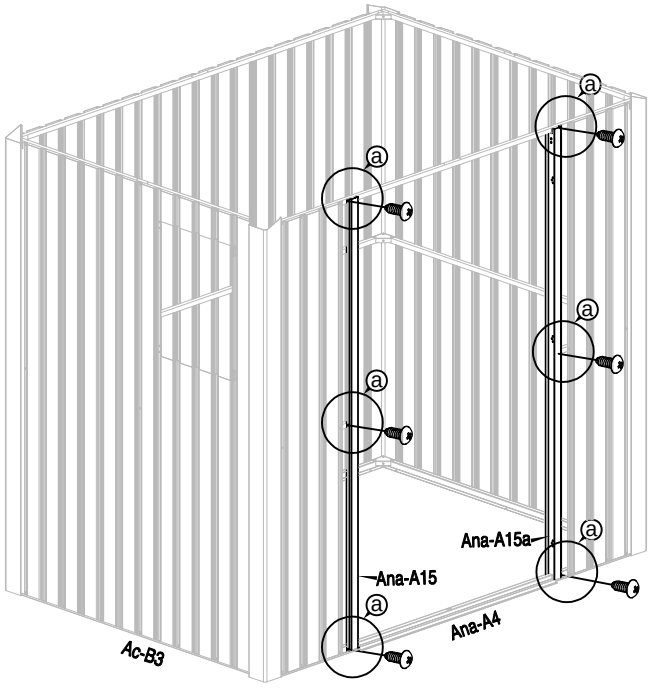

18

Ana-A16 x1	Ana-A16a x1	Anj-A41 x10	Anj-A40 x6

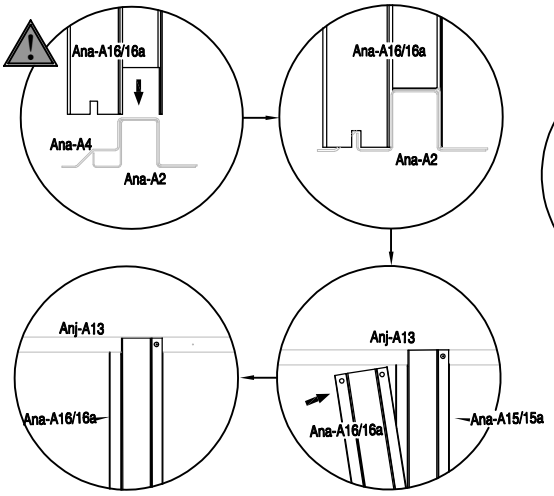

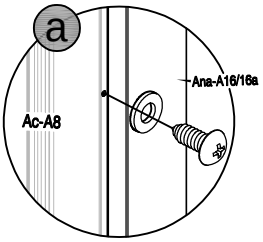

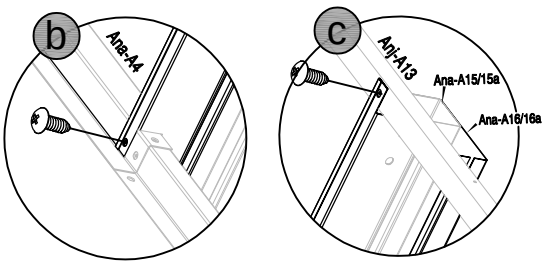

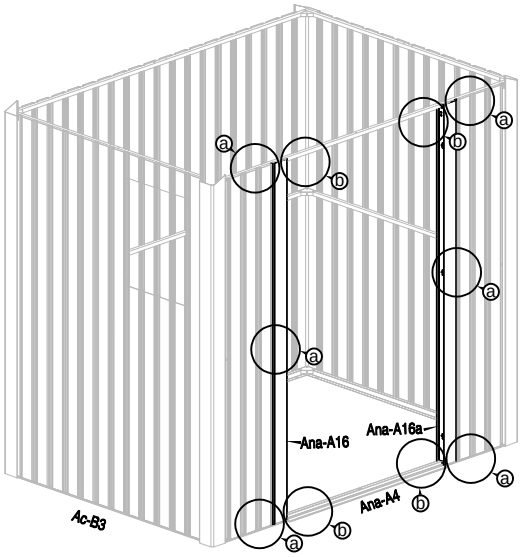

19



Ana-A17 x1



Anj-A44 x4

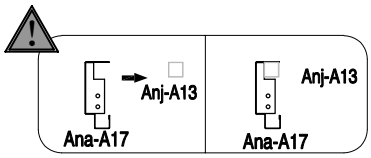

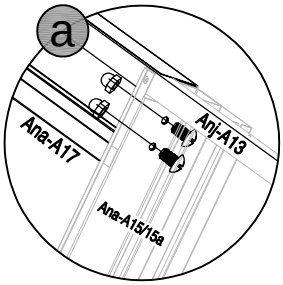

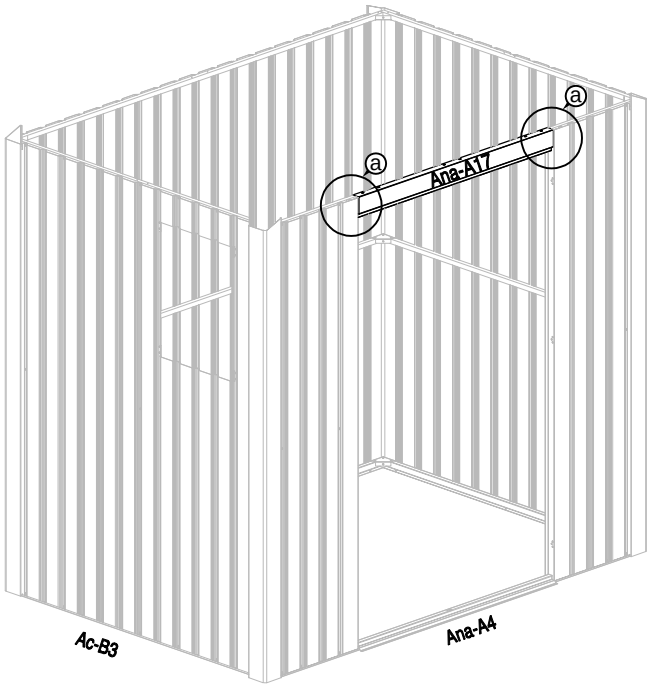

20



Anj-A18 x2

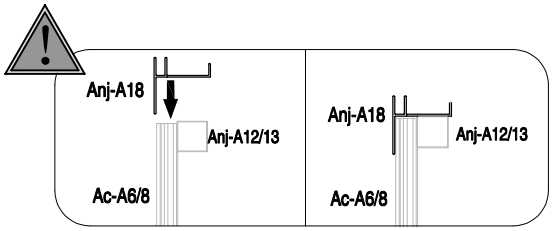

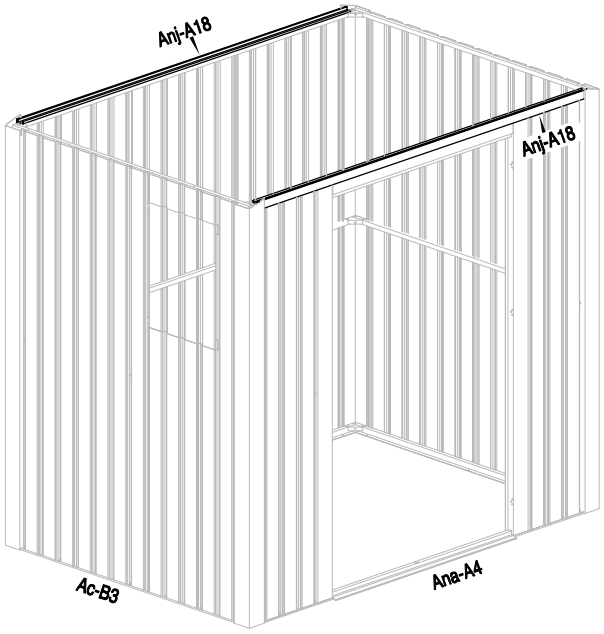

21



Anj-A20 x2



Anj-A41 x12

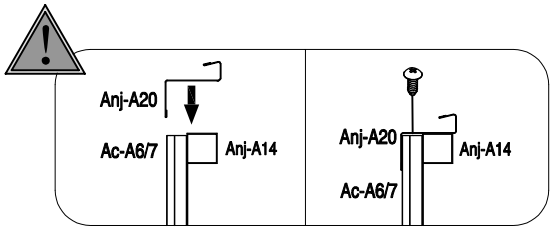

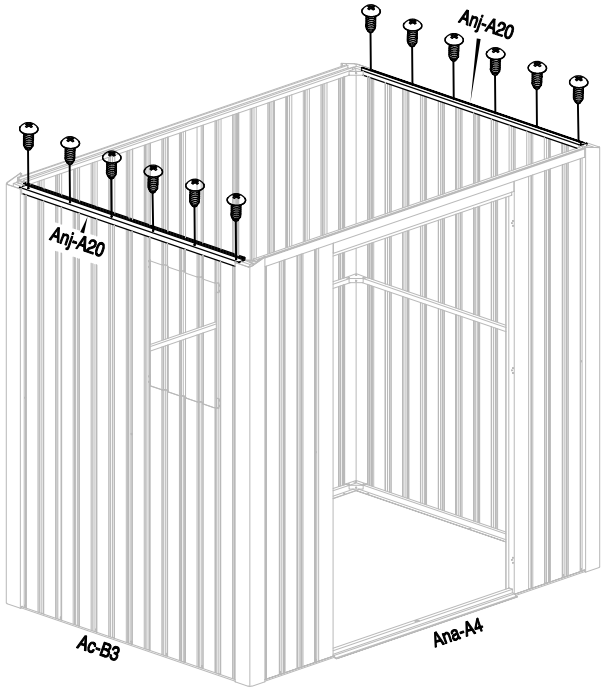

22



Anj-A22 x2



Anj-A22a x4



Anj-A41 x16

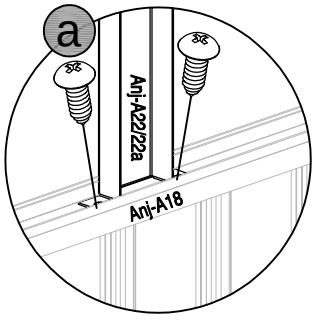

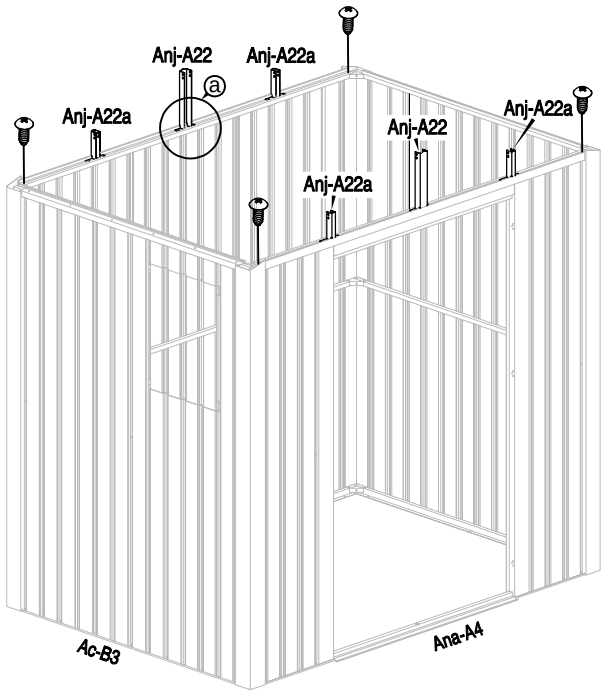

23



Anj-A23 x1



Anj-A23a x2



Anj-A41 x24

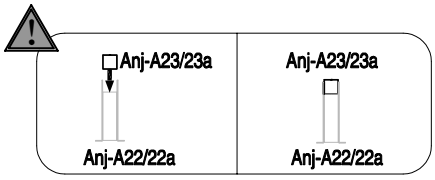

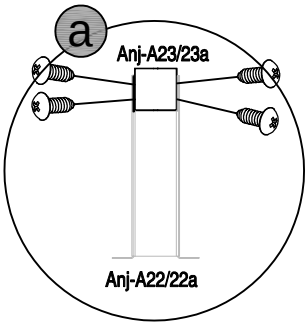

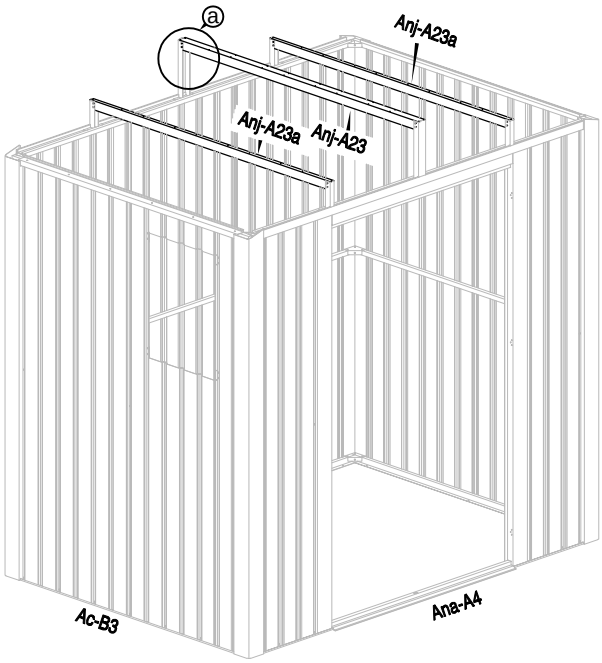

24

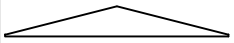

Anj-A21 x2

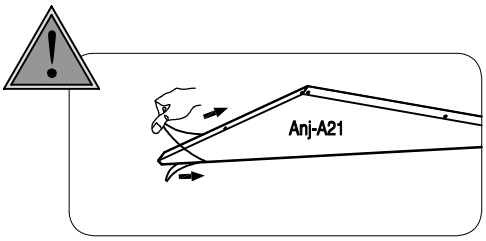

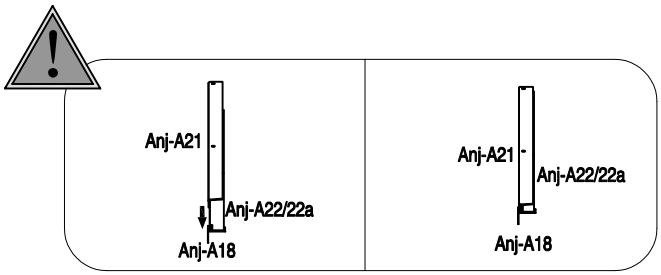

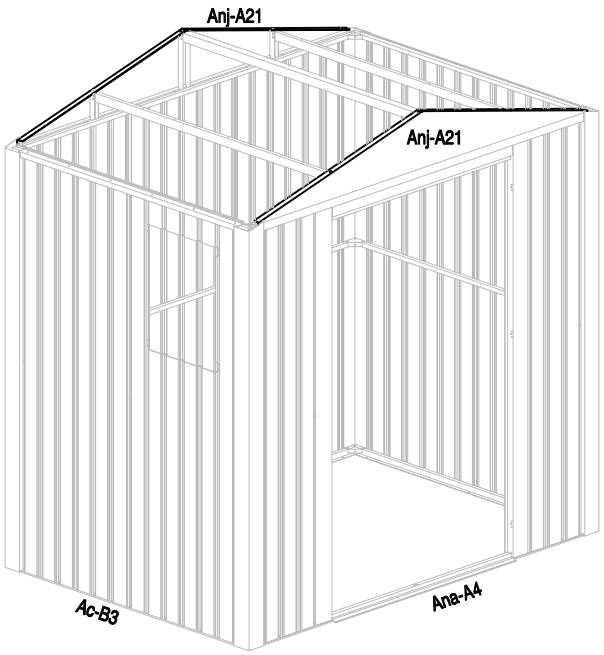

25					
	Anj-A25 x1	Anj-A25a x1	Anj-A41 x22	Anj-A40 x22	

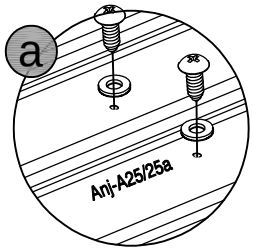

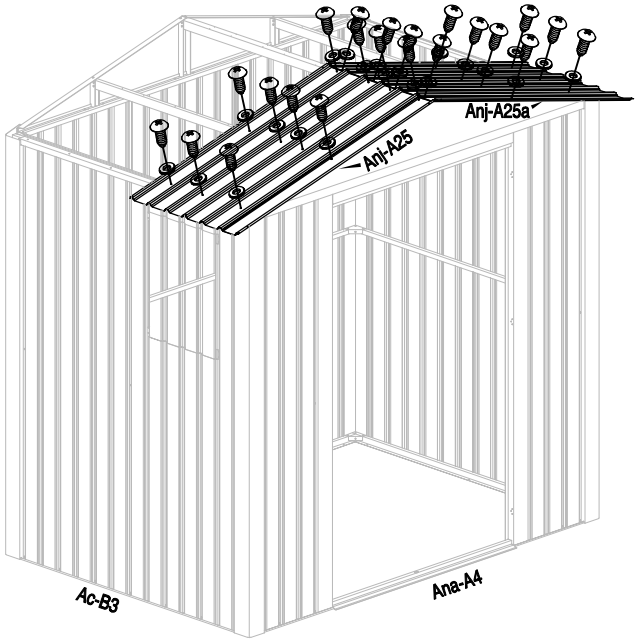

26				
	Anj-A24 x2	Anj-A41 x14	Anj-A40 x14	



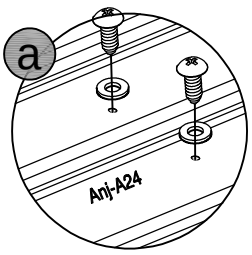

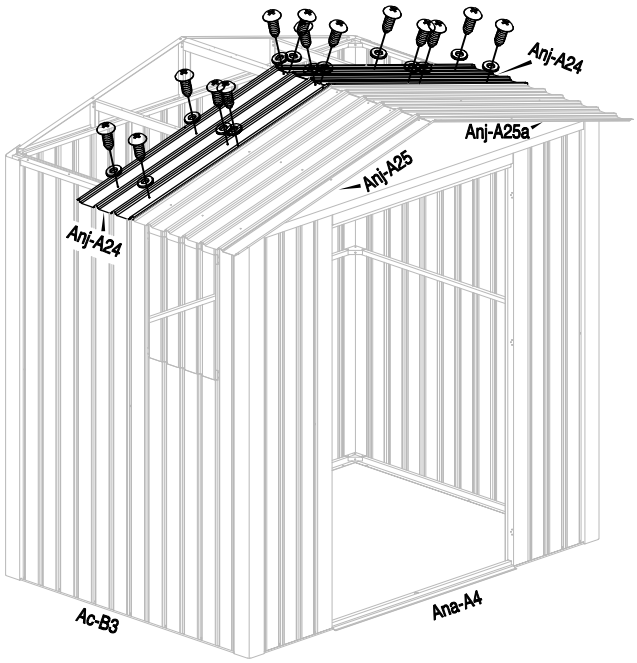

27					
	Anj-A25 x1	Anj-A25a x1	Anj-A41 x24	Anj-A40 x24	

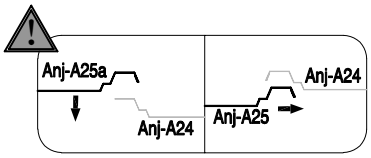

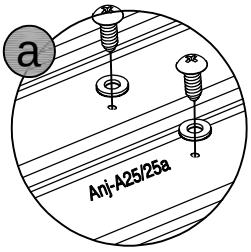

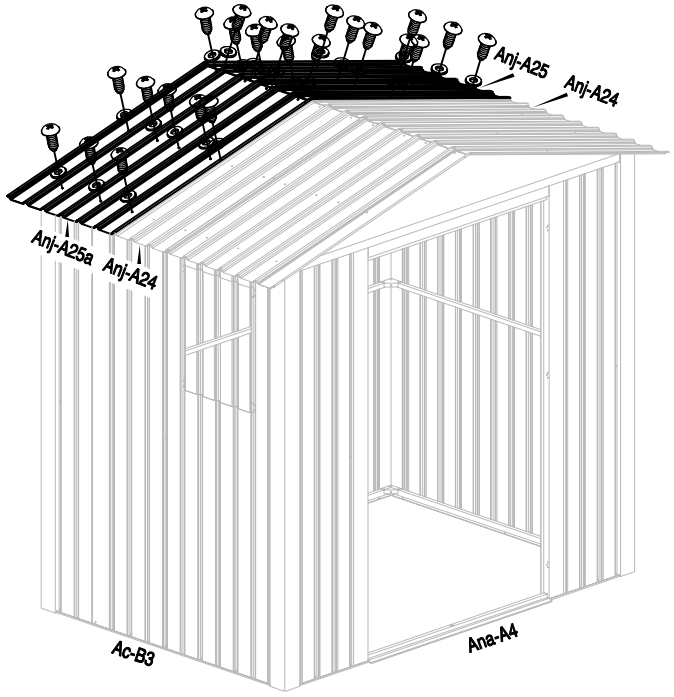

28				
	Anj-A28 x1	Anj-A46 x4	Anj-A40 x4	

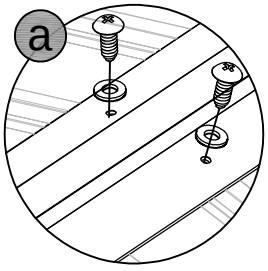

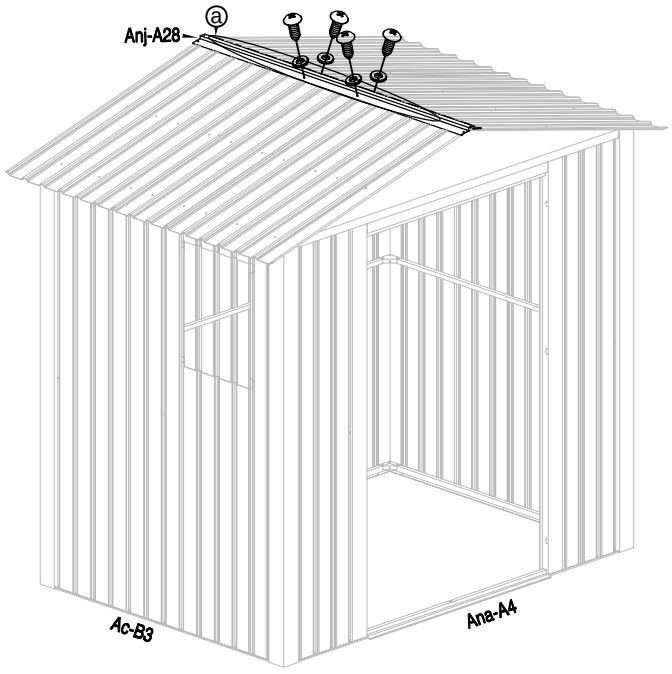

29					
	Anj-A27 x2	Anj-A27a x2	Anj-A41 x4	Anj-A40 x4	

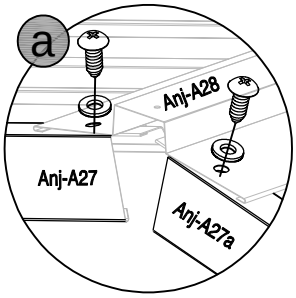

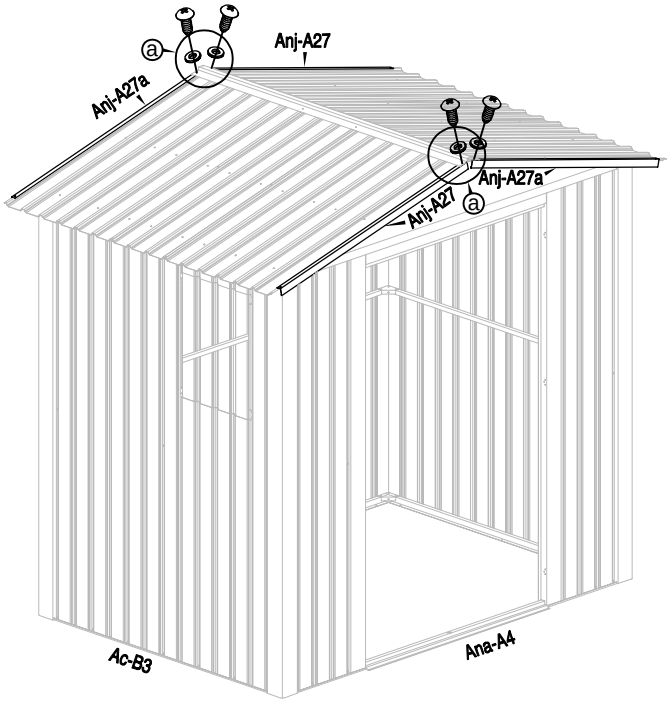

30			
	T-P4 x2	Anj-A41 x2	

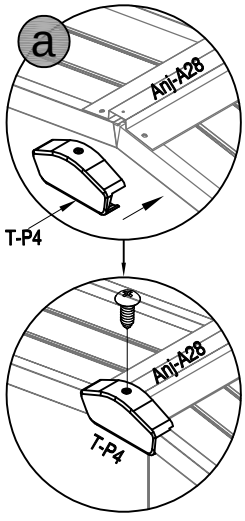

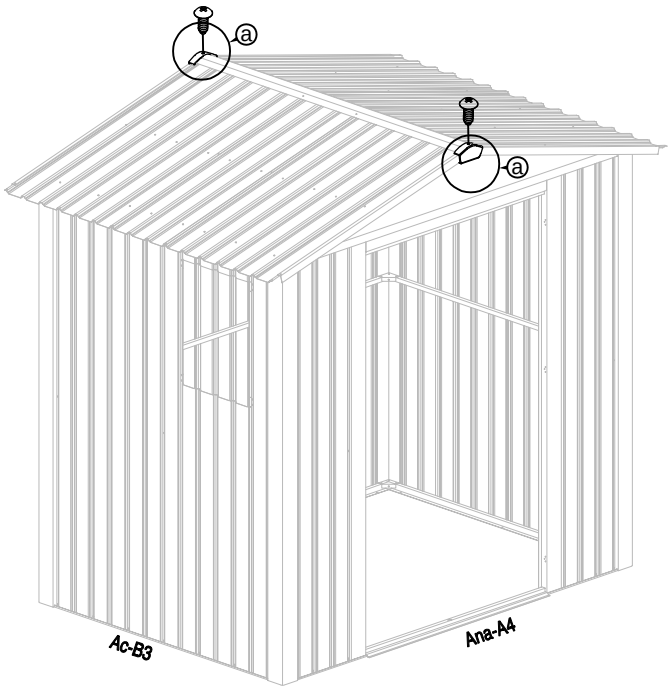

31				
	Anj-A26 x2	Anj-A41 x8	Anj-A40 x8	

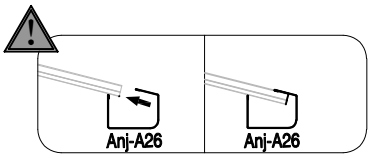

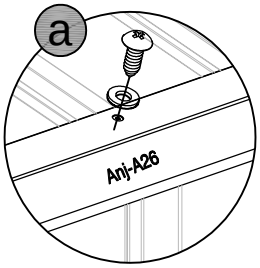

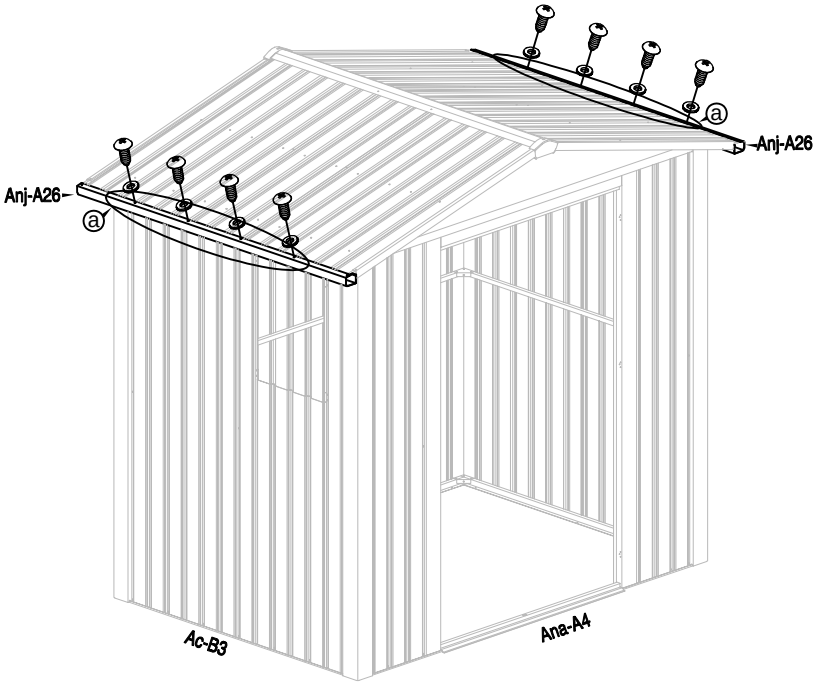

32				
	Ac-P1 x2	Ac-P2 x2	Anj-A41 x8	

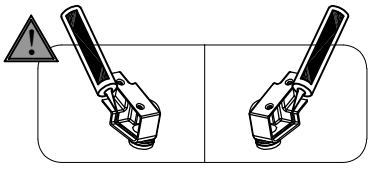

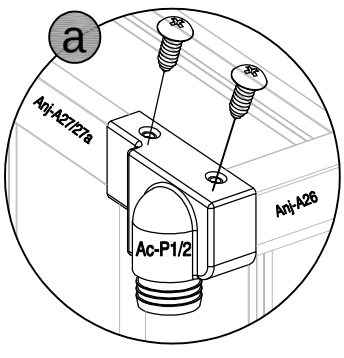

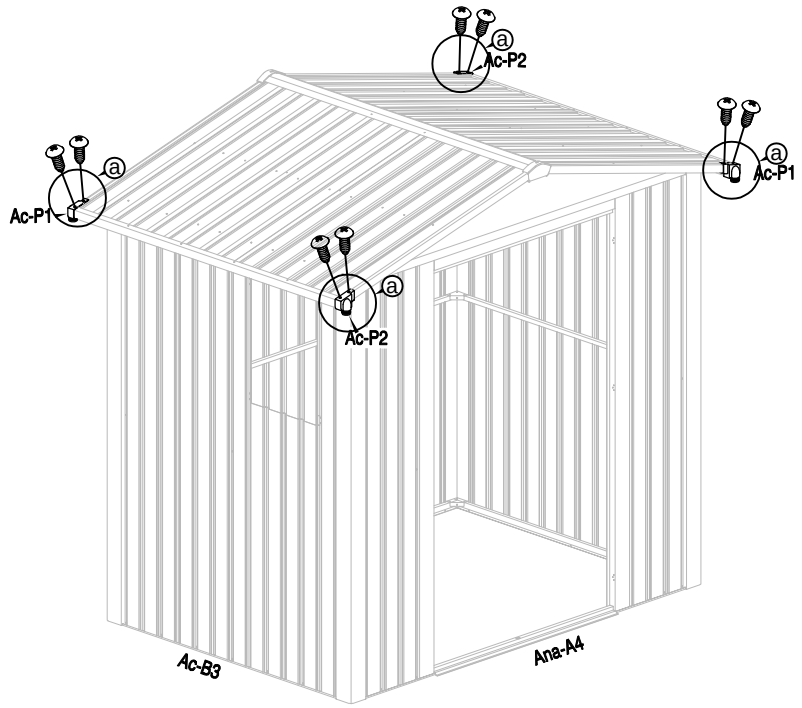

33			
	Ab-50 x6	Anj-A43 x18	

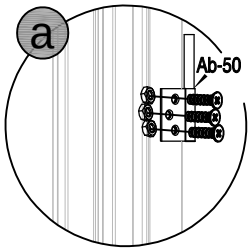

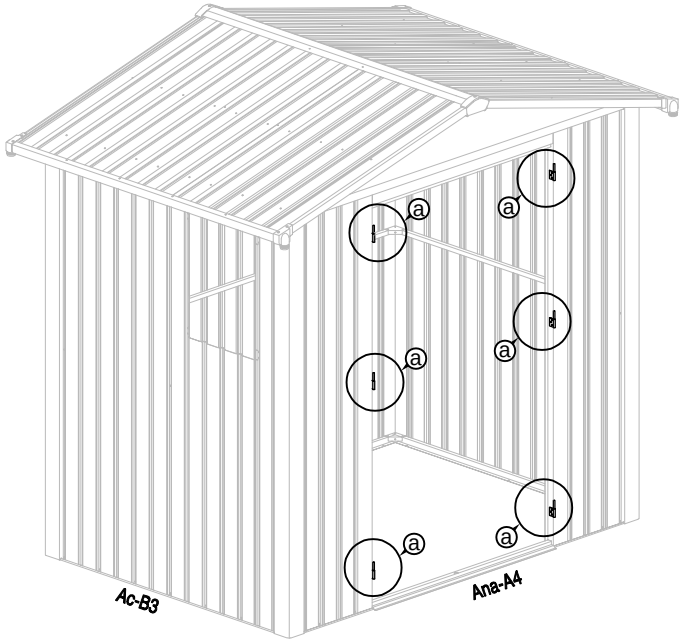

34								
	Ac-A29 x1	Ac-A29a x1	Ana-54 x1	Ana-55 x1	Ana-56 x1	Ana-57 x1	Ana-58 x3	

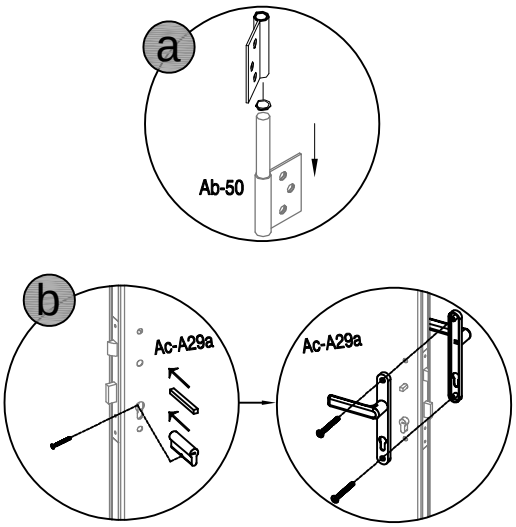

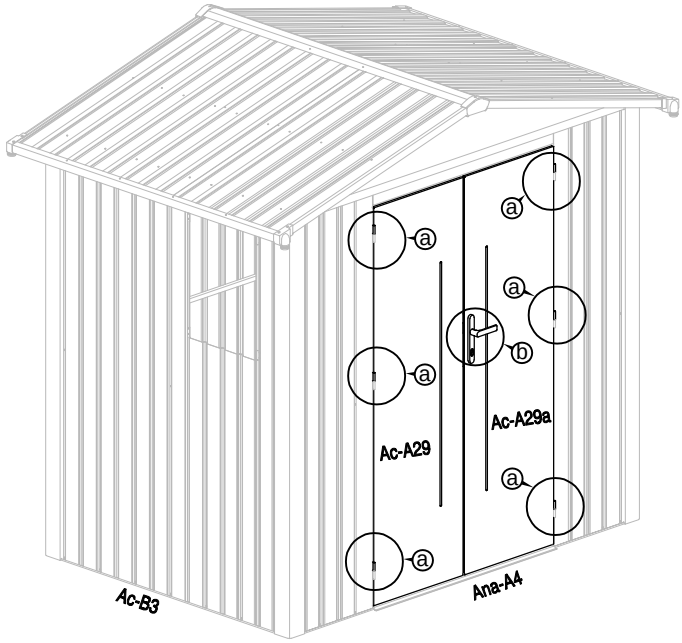

35



Ana-P6 x1



Anj-A41 x4

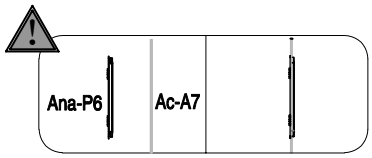

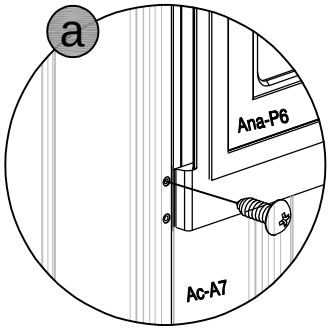

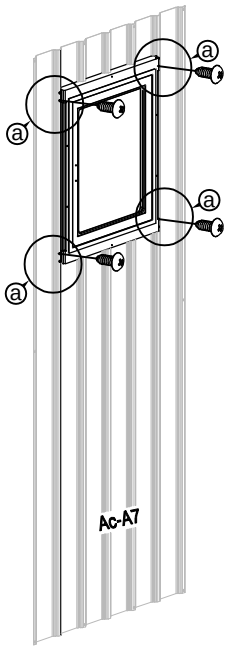

36



Ana-P7 x1



Anj-A41 x10

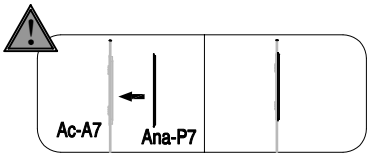

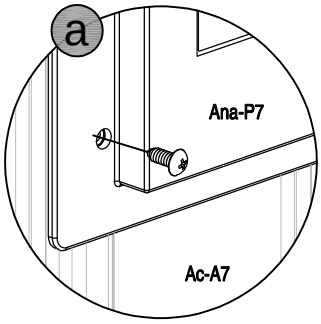

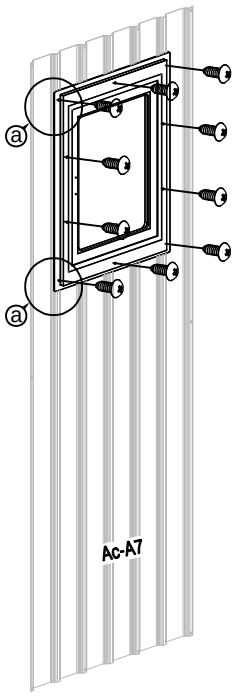

37



Ana-P8 x1



Ana-A42 x2

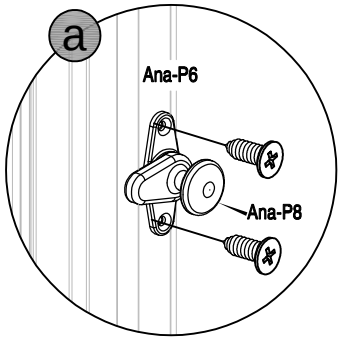

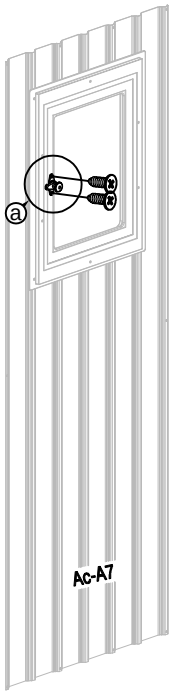

38



Anj-A37 x4M

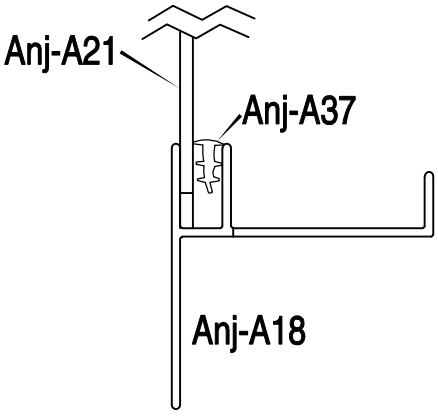

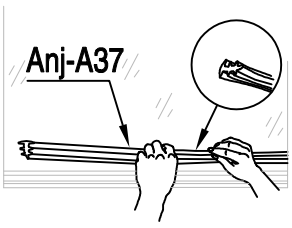

39

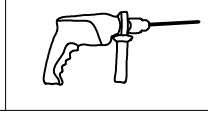

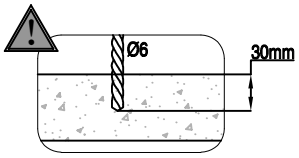

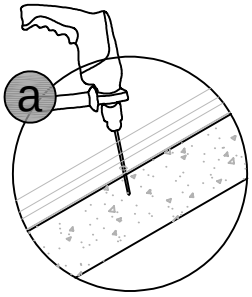

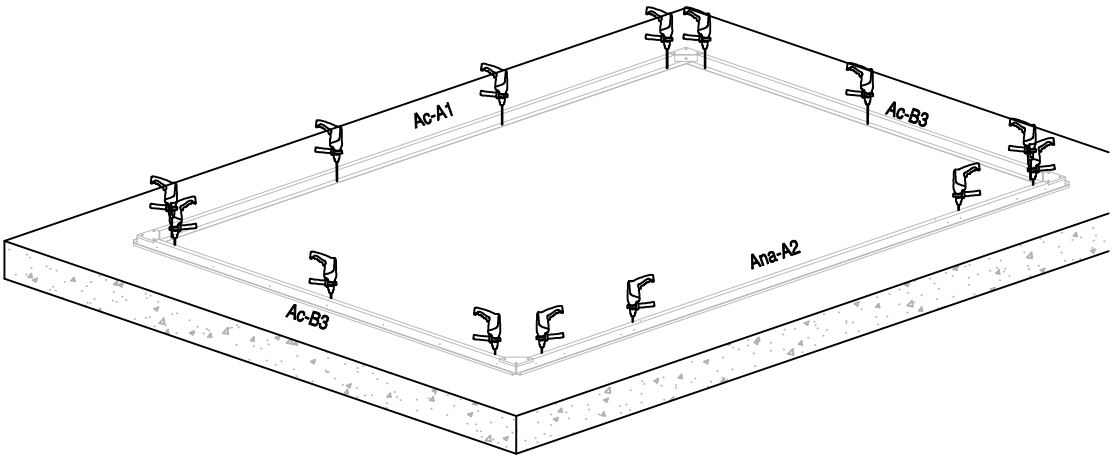

40



Anj-A45 x14

