Amy-B

OWNER'S MANUAL /
Instructions for Assembly



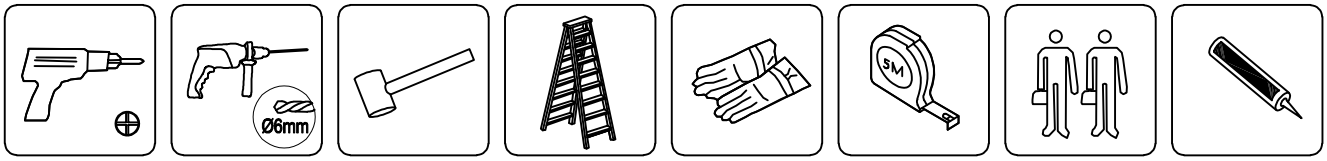

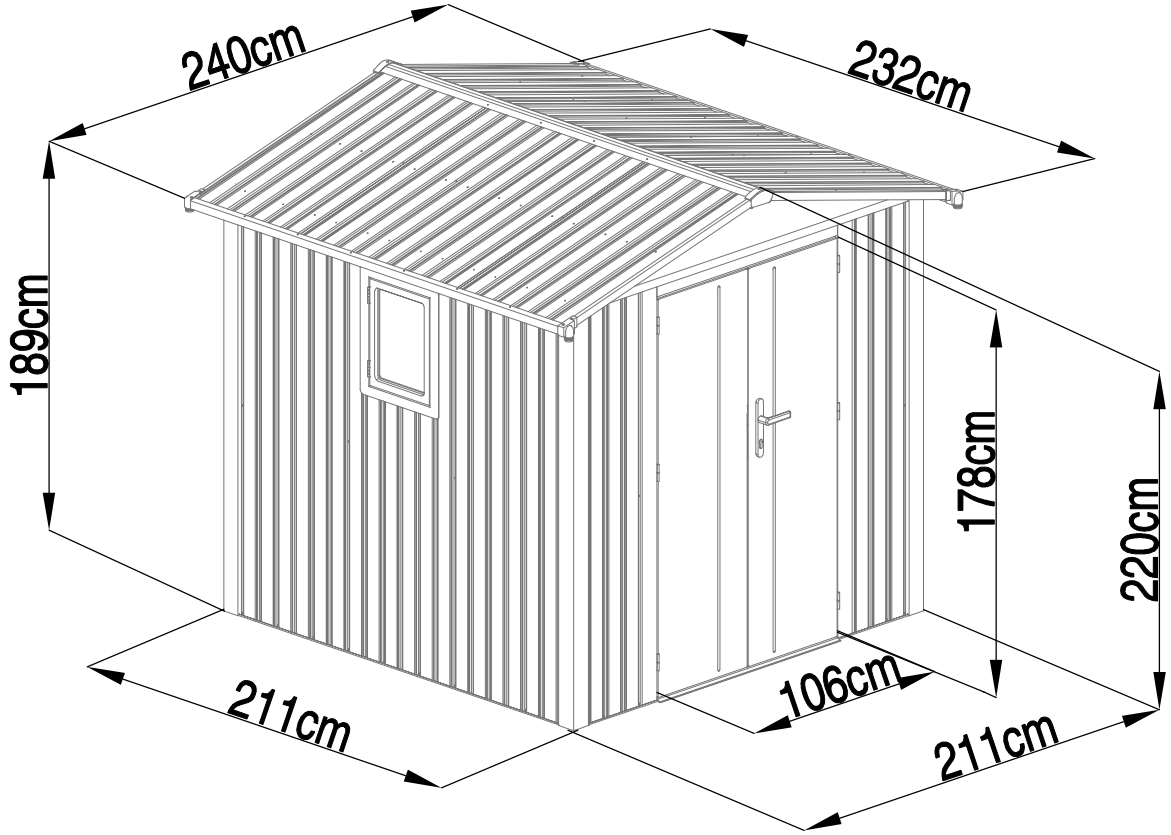

Area of installation requirement:

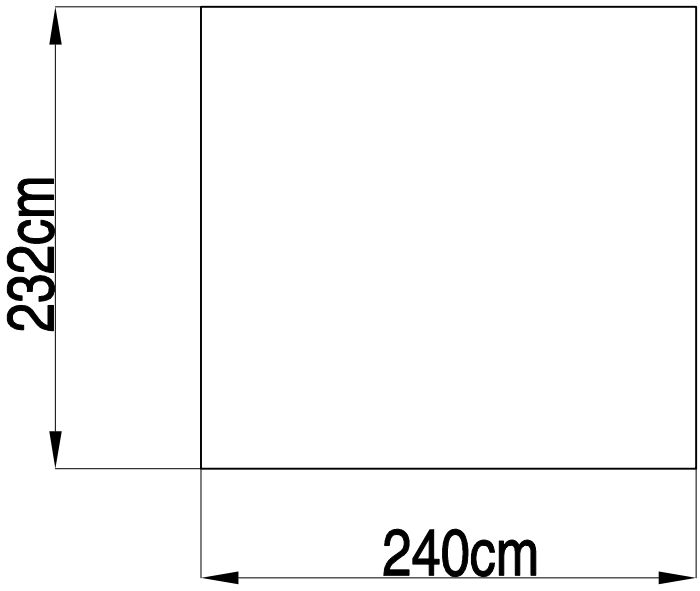

Amy-B:

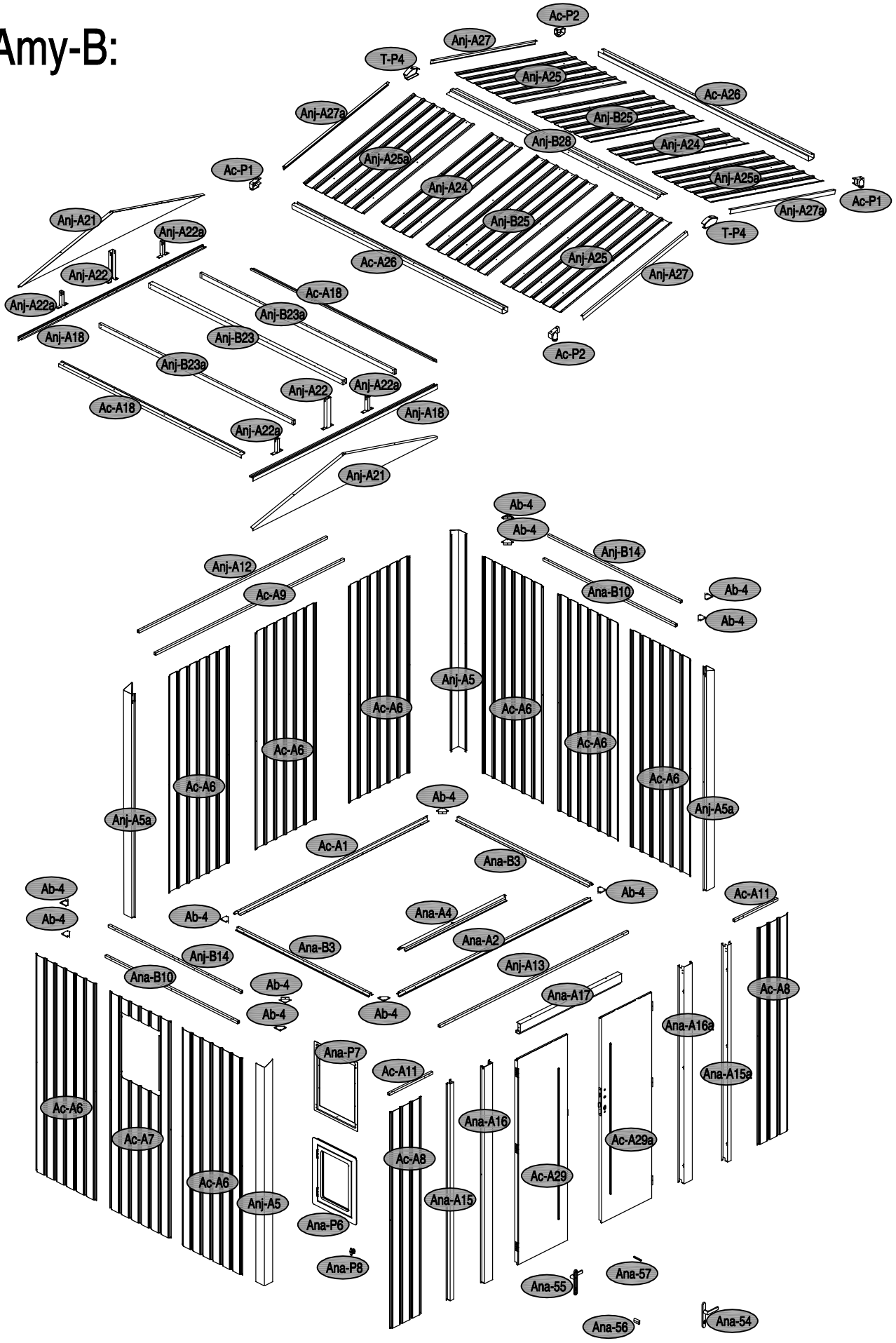
Ac-P2
Anj-A27
T-P4
Anj-A25
Ac-A26
Anj-A27a
Anj-B25
Anj-B28
Anj-A24
Anj-A25a
Ac-P1
Anj-A24
Anj-A25a
Ac-P1
Anj-A21
Anj-A22a
Anj-B25
Anj-A27a
T-P4
Anj-A22
Ac-A26
Anj-A25
Anj-A27
Anj-A22a
Ac-A18
Anj-B23a
Anj-A18
Anj-B23
Ac-P2
Anj-B23a
Anj-A22
Anj-A22a
Ac-A18
Anj-A18
Anj-A22a
Anj-A21
Ab-4
Ab-4
Anj-B14
Anj-A12
Ac-A9
Ana-B10
Ab-4
Ab-4
Anj-A5
Ac-A6
Ac-A6
Ac-A6
Ac-A6
Ac-A6
Ac-A6
Anj-A5a
Anj-A5a
Ab-4
Ac-A1
Ana-B3
Ab-4
Ac-A11
Ab-4
Ab-4
Ana-A4
Ana-A2
Ana-B3
Anj-B14
Anj-A13
Ana-B10
Ab-4
Ana-A17
Ac-A8
Ab-4
Ab-4
Ana-A16a
Ana-P7
Ac-A11
Ana-A15a
Ac-A6
Ana-A16
Ac-A7
Ac-A29a
Ac-A8
Ac-A6
Ac-A29
Anj-A5
Ana-A15
Ana-P6
Ana-P8
Ana-55
Ana-57
Ana-56
Ana-54

NO.	IMAGE	mm	QTY
UNDER			
Ac-A1	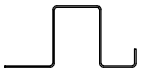	2064	x1
Ana-A2		2064	x1
Ana-B3		2064	x2
Ana-A4		1130	x1
MIDDLE			
Anj-A5		1925	x2
Anj-A5a		1925	x2
Ac-A6		1900	x8
Ac-A7		1900	x1
Ac-A8		1900	x2
Ac-A9	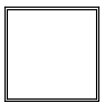	2024	x1
Ana-B10		2063	x2
Ac-A11		464	x2
Anj-A12		2024	x1
Anj-A13		2024	x1
Anj-B14		2063	x2
Ana-A15		1900	x1
Ana-A15a		1900	x1
Ana-A16	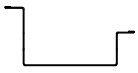	1900	x1
Ana-A16a		1900	x1
Ana-A17		1087.5	x1
Anj-A18		1980	x2
Anj-A22		263	x2
Anj-A22a		125	x4
Anj-B23		2084.5	x1
Anj-B23a		2084.5	x2
Anj-A21		1980	x2
Ac-A18		1959	x2
DOOR			
Ac-A29		1804	x1
Ac-A29a		1804	x1

NO.	IMAGE	mm	QTY
TOP			
Anj-A24		1222	x2
Anj-A25		1222	x2
Anj-A25a		1222	x2
Anj-B25		1222	x2
Ac-A26		2256.5	x2
Anj-A27		1158.5	x2
Anj-A27a		1158.5	x2
Anj-B28		2256.5	x1
ANNEX			
Ab-4			x12
Anj-A37			4M
Ac-P1			x2
Ac-P2			x2
T-P4			x2
Ana-P6			x1
Ana-P7			x1
Ana-P8			x1
Ab-50			x6
Ana-54			x1
Ana-55			x1
Ana-56			x1
Ana-57			x1
Ana-58		M5x45	x3
Anj-B40			x207
Anj-B41		ST4x10	x329
Ana-A42		ST4x10	x2
Anj-A43		M4x10	x18
Anj-A44		M5x8	x4
Anj-B45		ST4x25	x14
Anj-B46		ST4x16	x8

1				
	Ac-A1 x1	Ana-A2 x1	Ana-B3 x2	

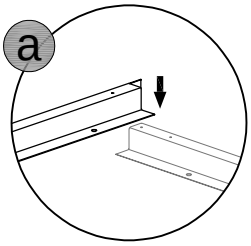

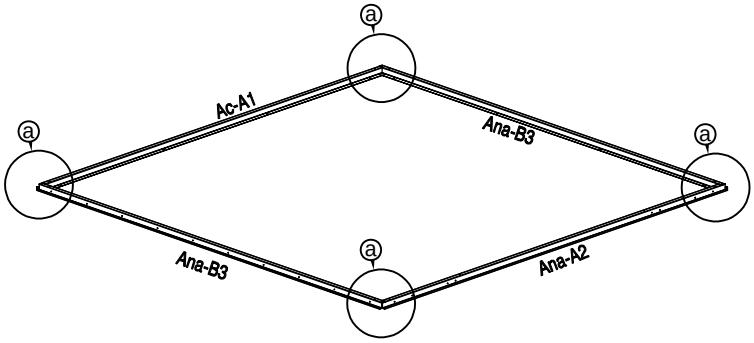

2			
	Ab-4 x4	Anj-B41 x12	

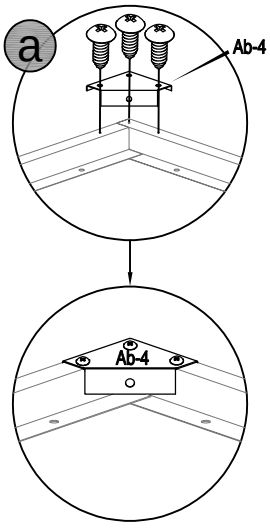

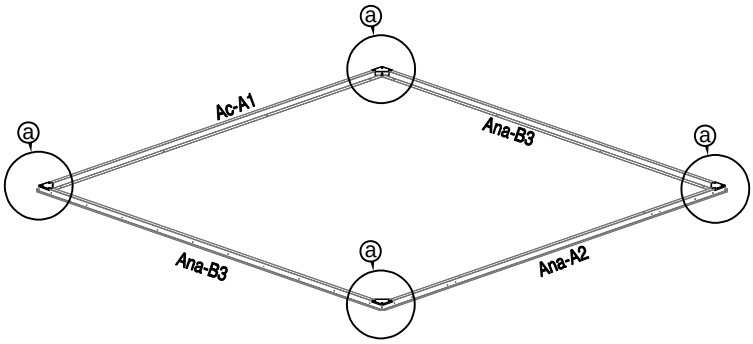

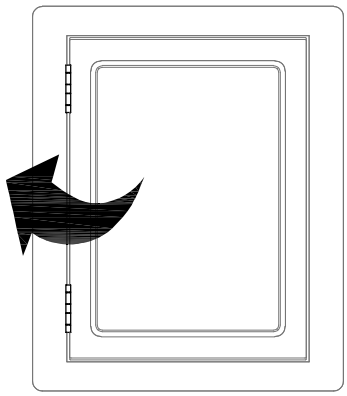

Or

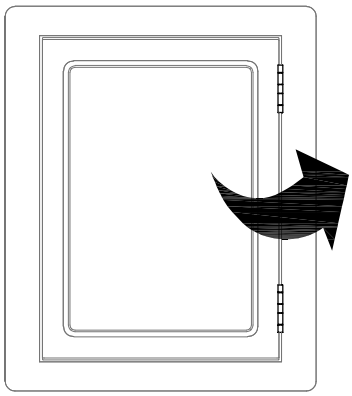

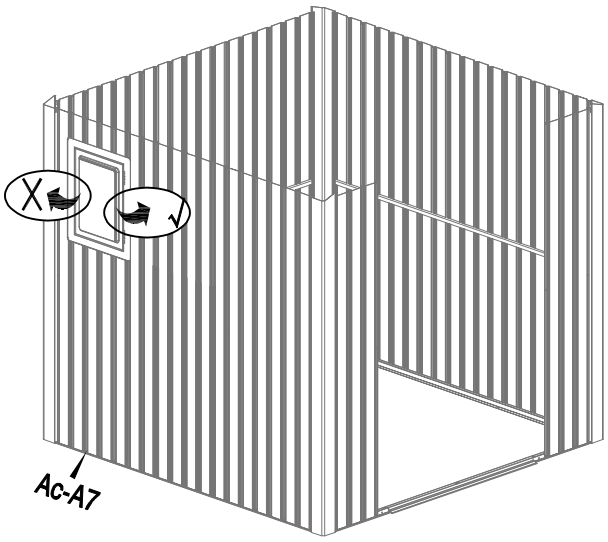

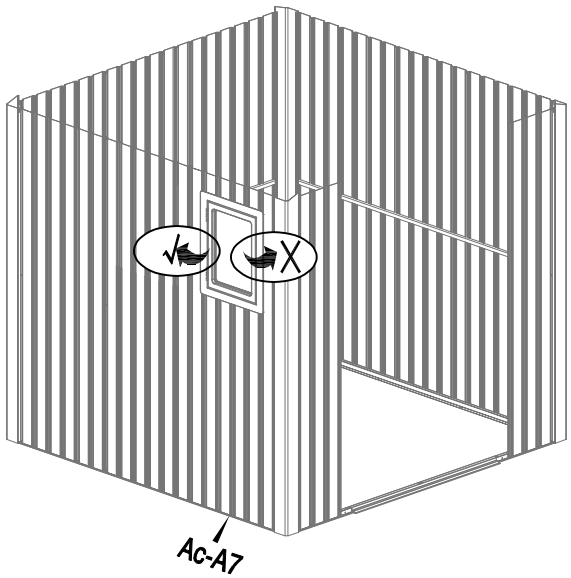

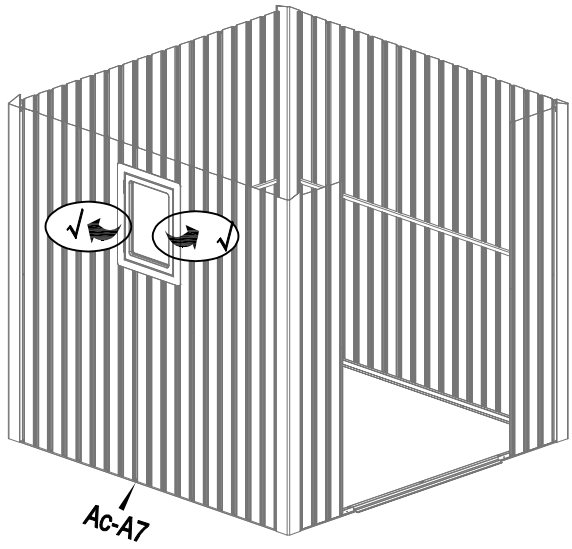
Ac-A7

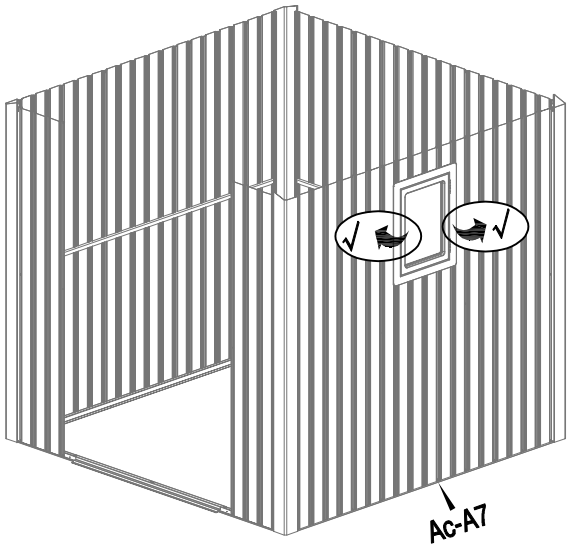
Ac-A7

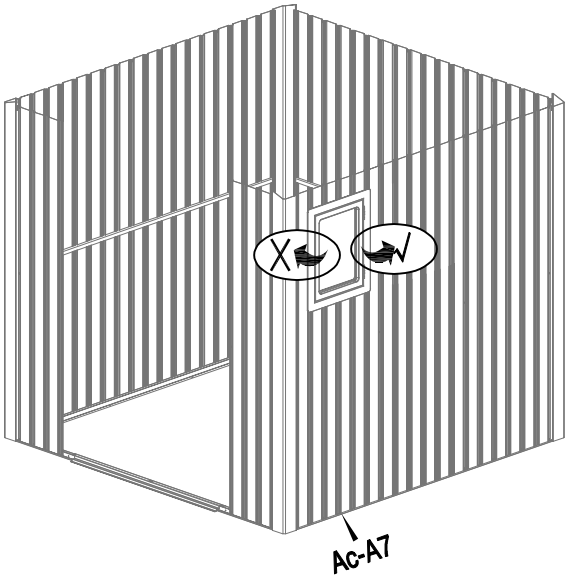
Ac-A7

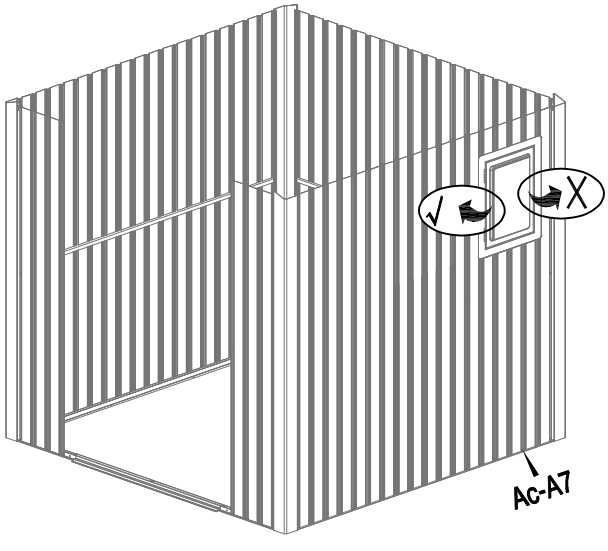
Ac-A7

3

Ac-A6 x1	Anj-A5 x1	Ana-B10 x1	Anj-B41 x5	Anj-B40 x5

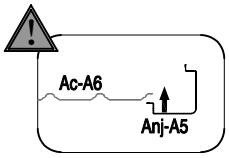

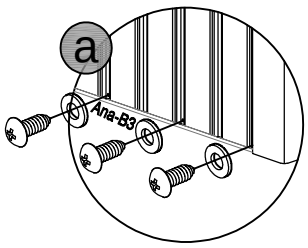

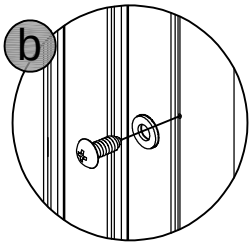

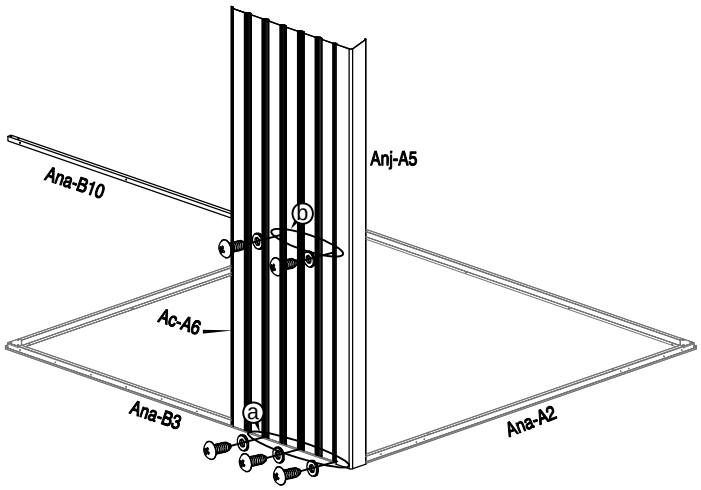

4

Ac-A8 x1	Ac-A11 x1	Anj-B41 x3	Anj-B40 x3

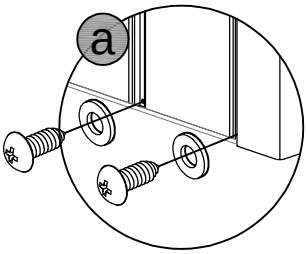

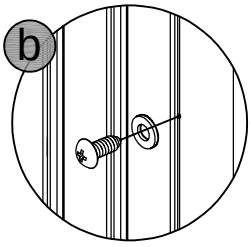

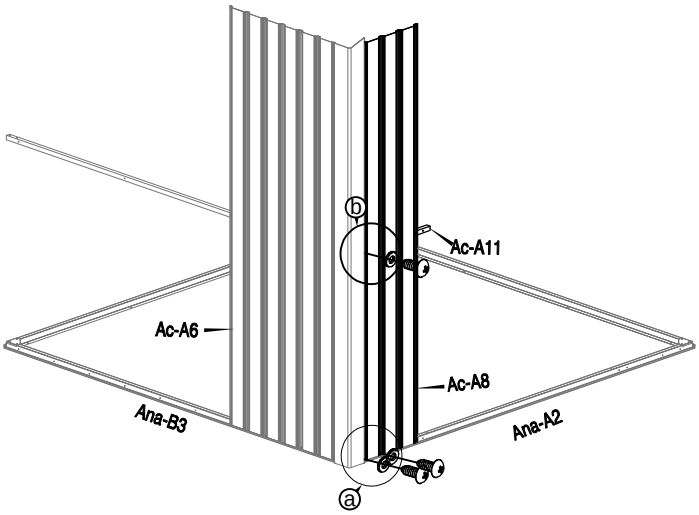

5				
	Ac-A7 x1	Anj-B41 x5	Anj-B40 x5	

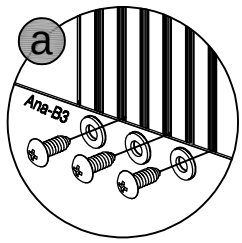

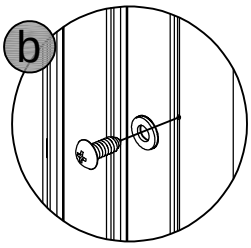

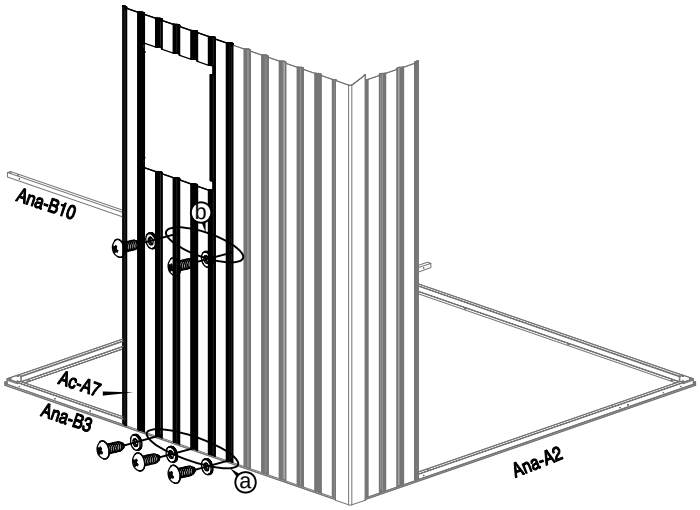

6					
	Ac-A6 x1	Anj-A5a x1	Anj-B41 x7	Anj-B40 x7	

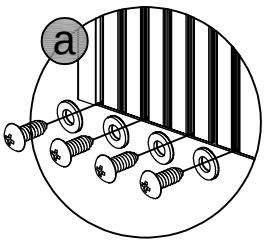

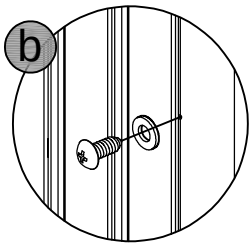

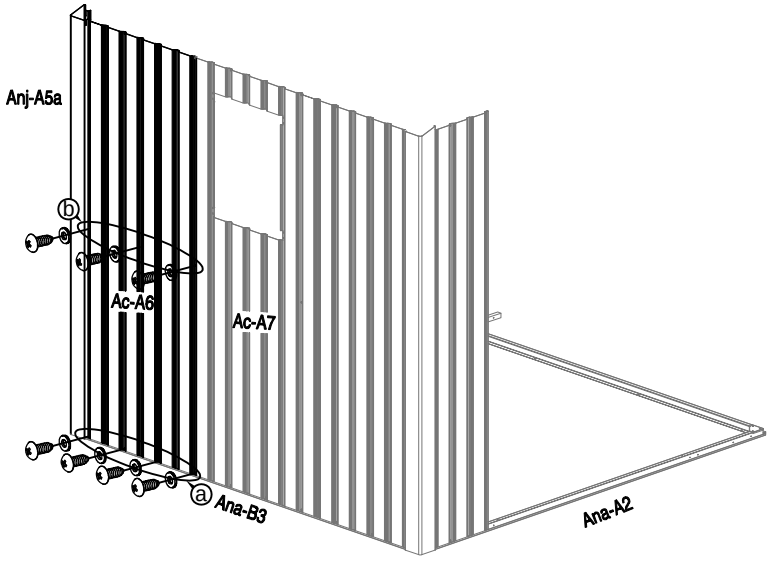

7					
	Ac-A6 x1	Ac-A9 x1	Anj-B41 x5	Anj-B40 x5	

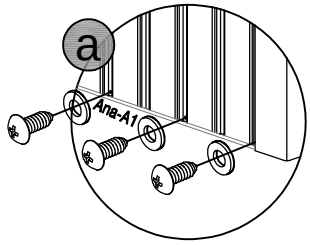

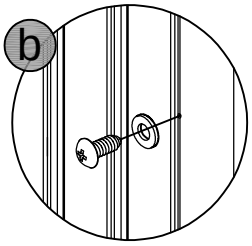

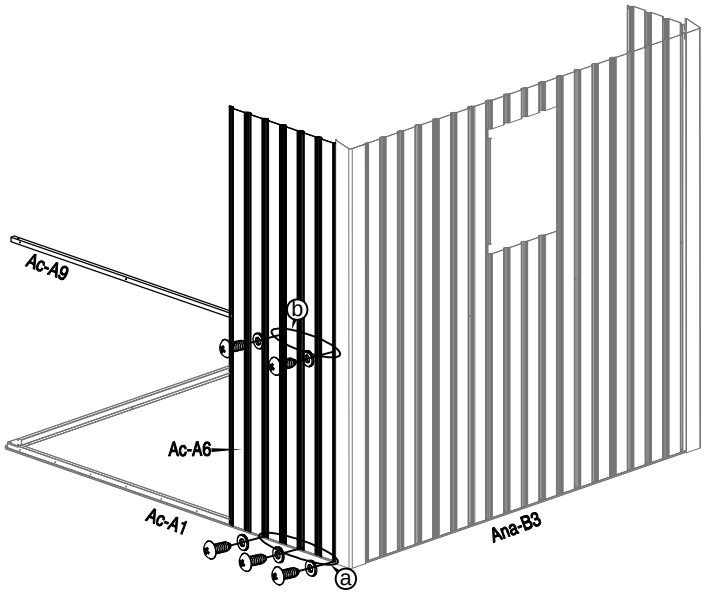

8				
	Ac-A6 x1	Anj-B41 x5	Anj-B40 x5	

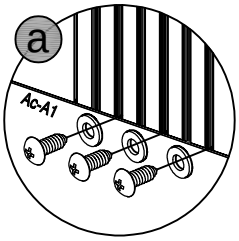

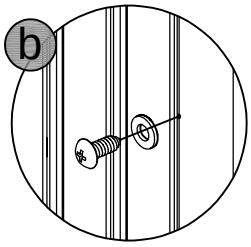

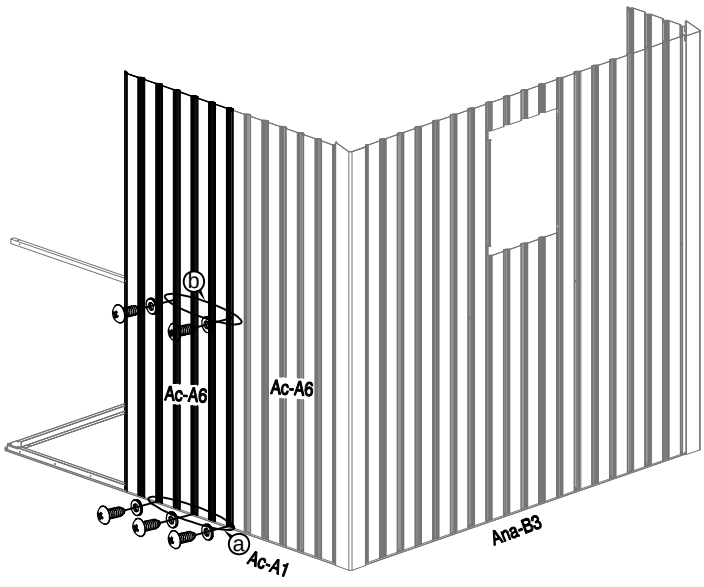

9					
	Ac-A6 x1	Anj-A5 x1	Anj-B41 x7	Anj-B40 x7	

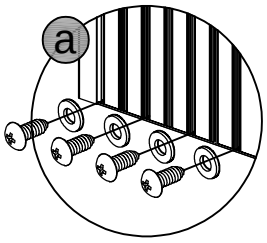

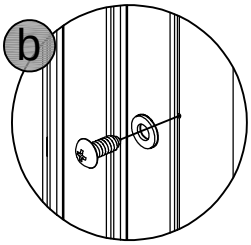

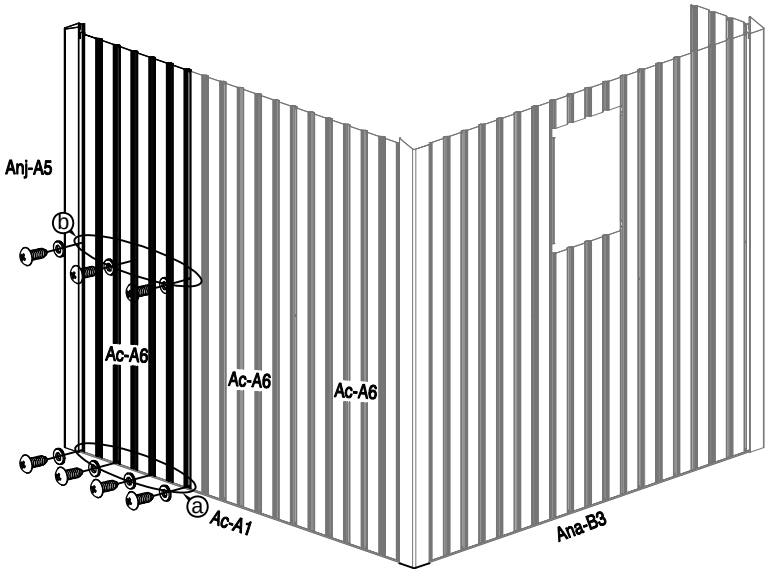

10					
	Ac-A6 x1	Ana-B10 x1	Anj-B41 x5	Ana-A40 x5	

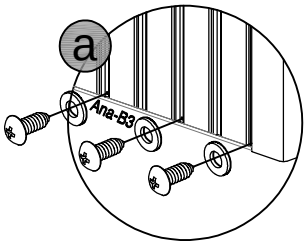

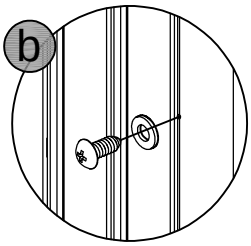

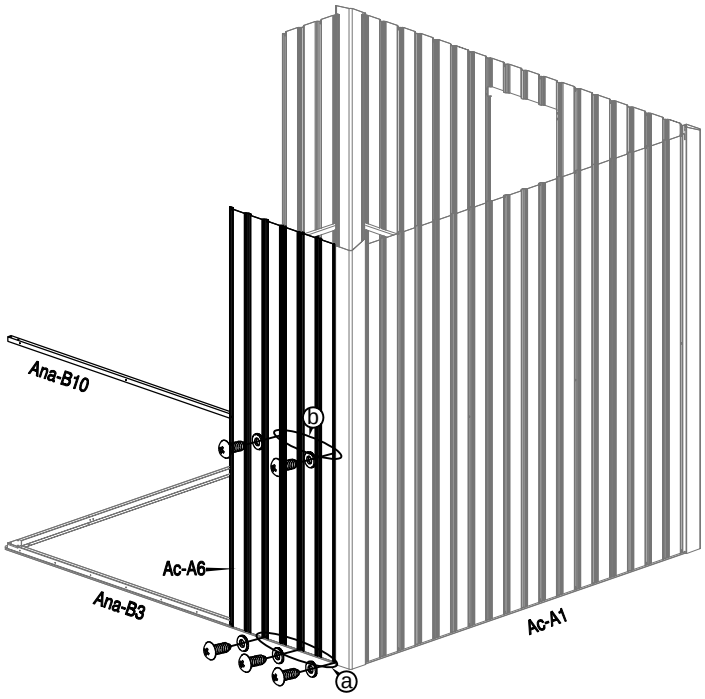

11				
	Ac-A6 x1	Anj-B41 x5	Anj-B40 x5	

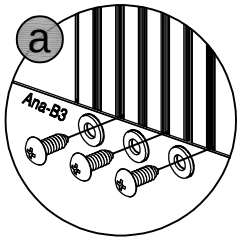

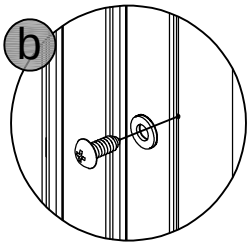

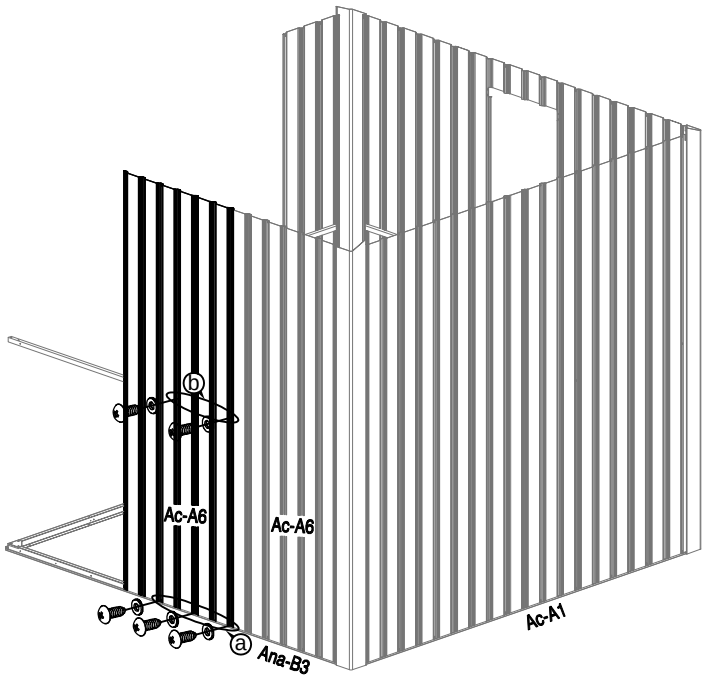

12					
	Ac-A6 x1	Anj-A5a x1	Anj-B41 x7	Anj-B40 x7	

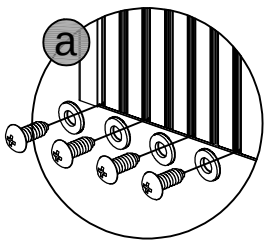

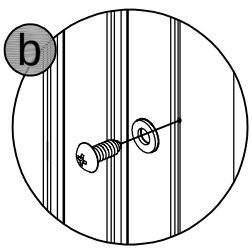

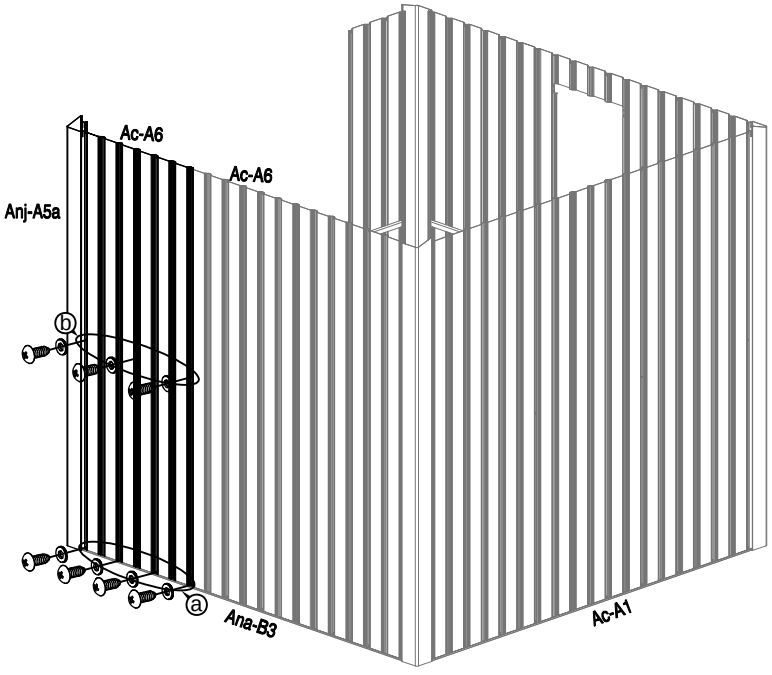

13					
	Ac-A8 x1	 Ac-A11 x1	 Anj-B41 x3	 Anj-B40 x3	

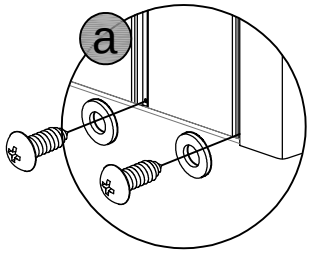

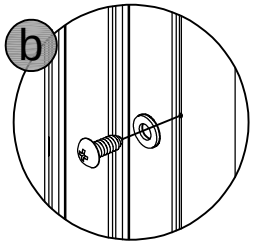

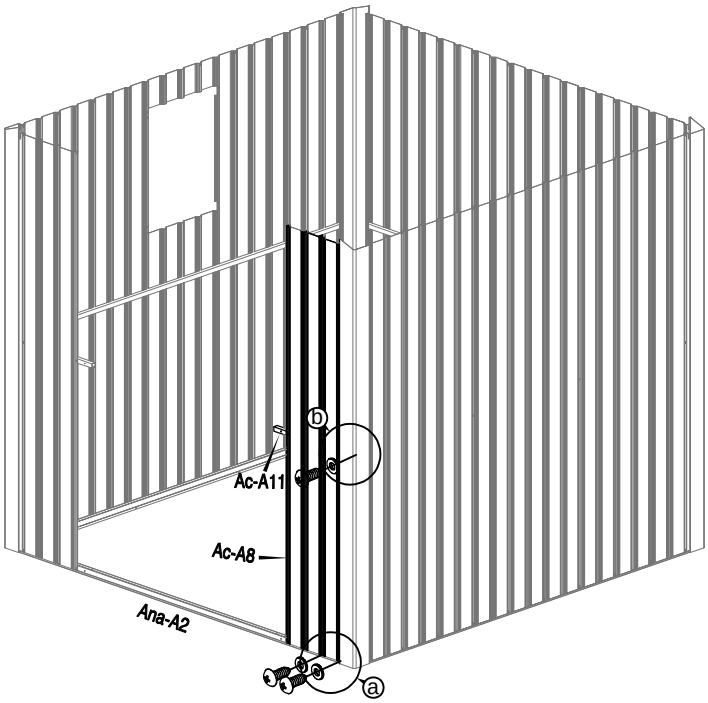

14			
	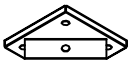 Ab-4 x4	 Anj-B41 x12	

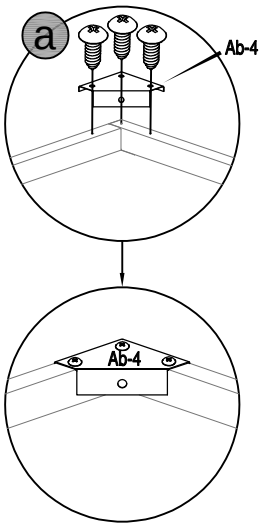

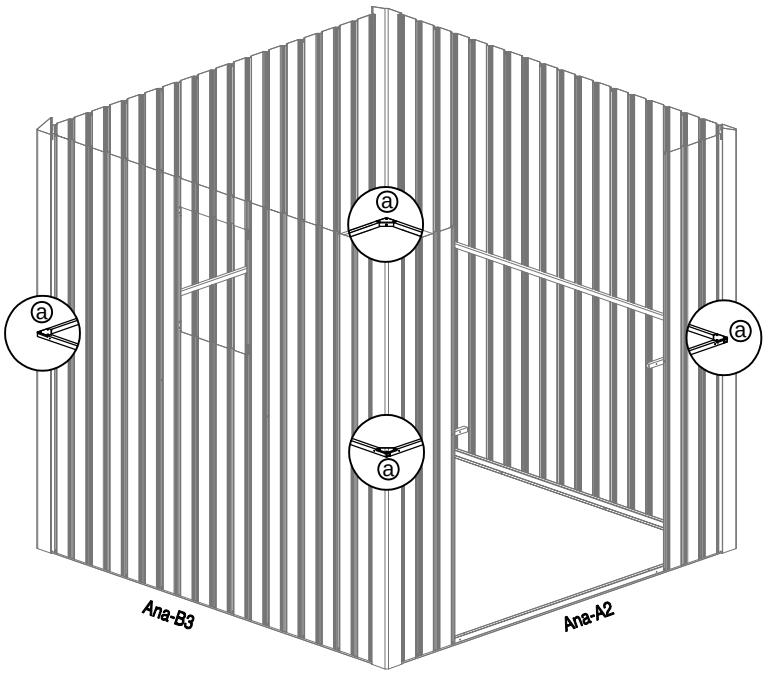

15					
	Anj-A13 x1	Anj-B14 x1	Anj-B41 x14	Anj-B40 x14	

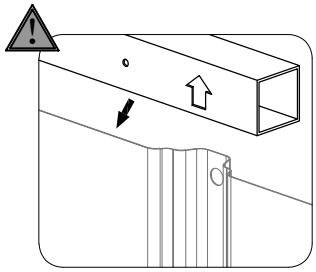

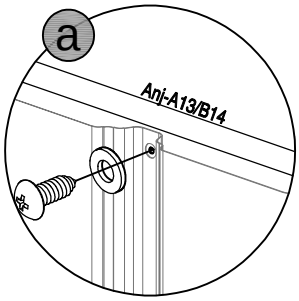

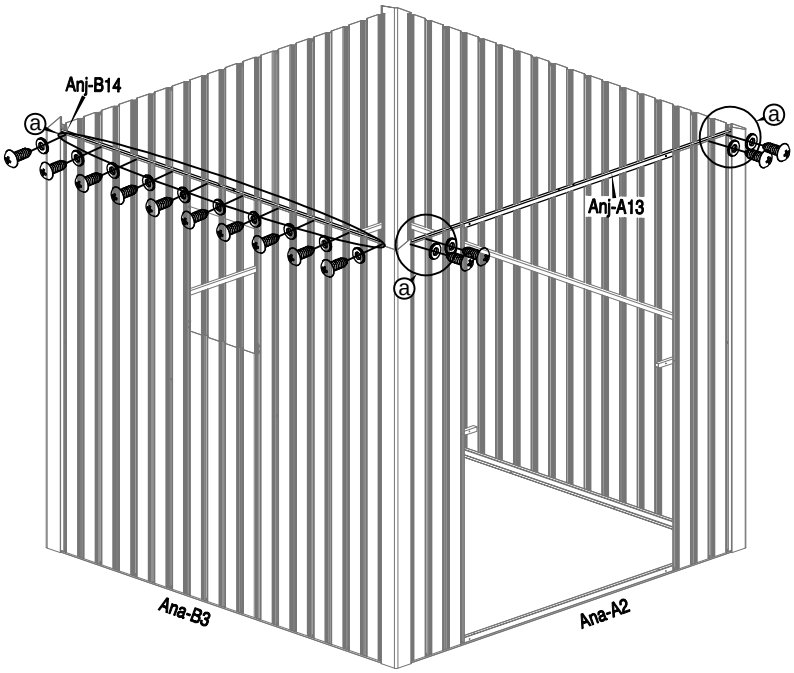

16					
	Anj-A12 x1	Anj-B14 x1	Anj-B41 x20	Anj-B40 x20	

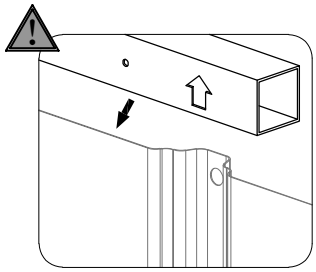

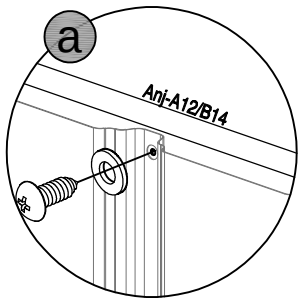

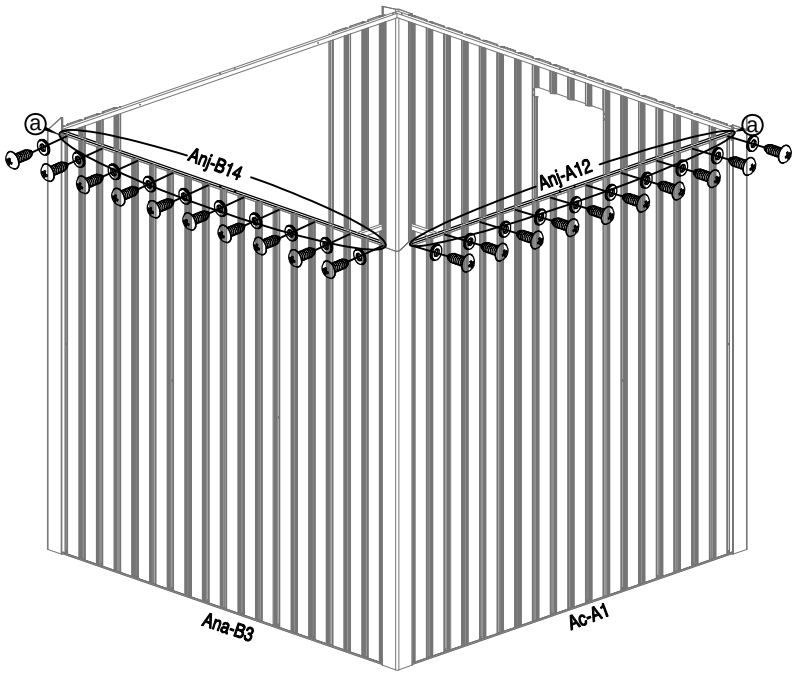

17		
	Ab-4 x4	Anj-B41 x12

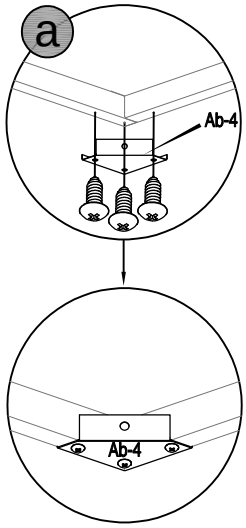

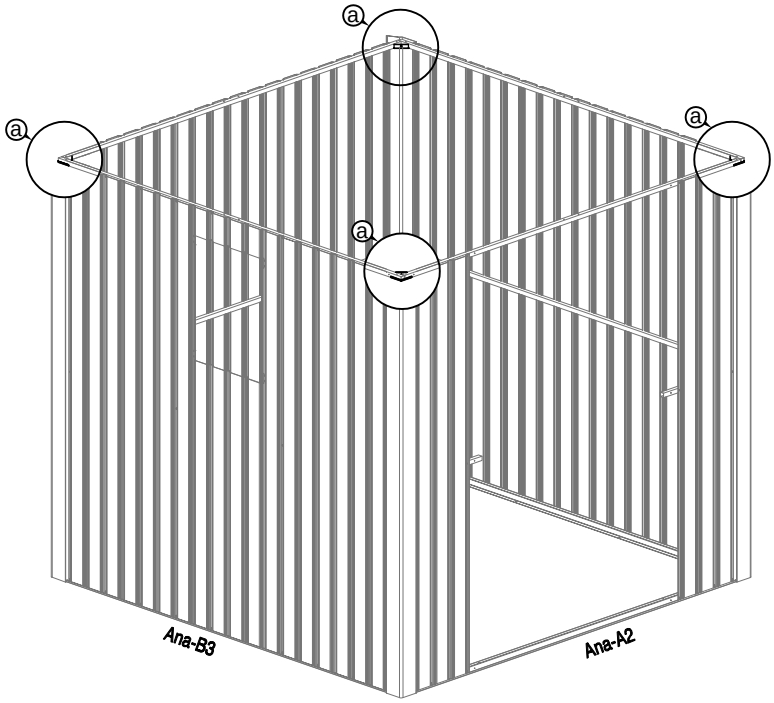

18		
	Ana-A4 x1	Anj-B41 x4

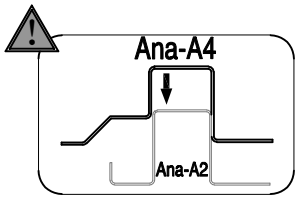

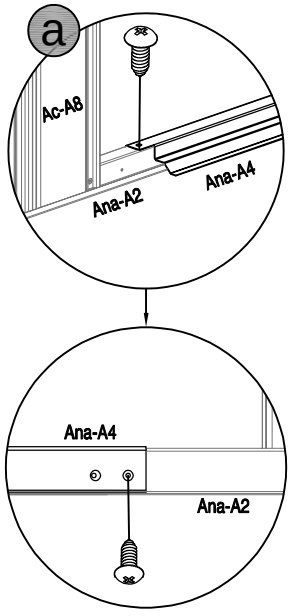

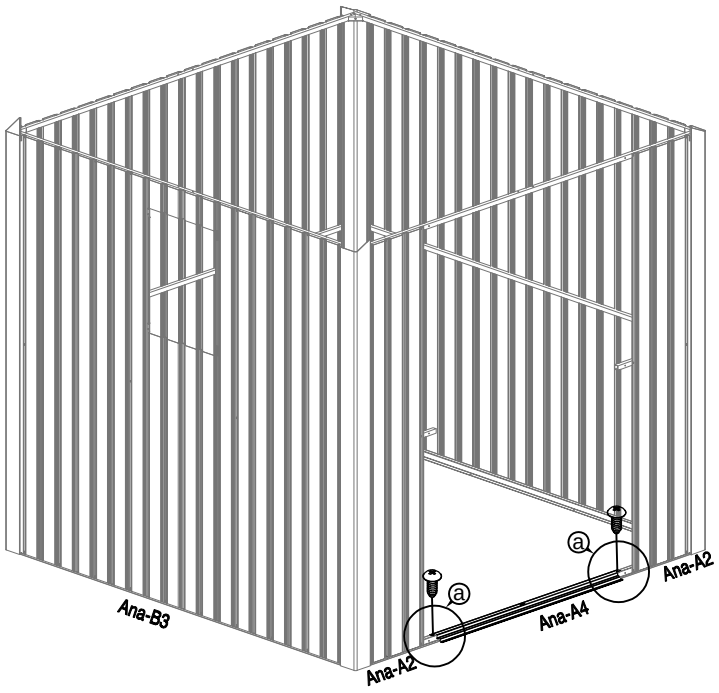

19

Ana-A15 x1

Ana-A15a x1

Anj-B41 x6

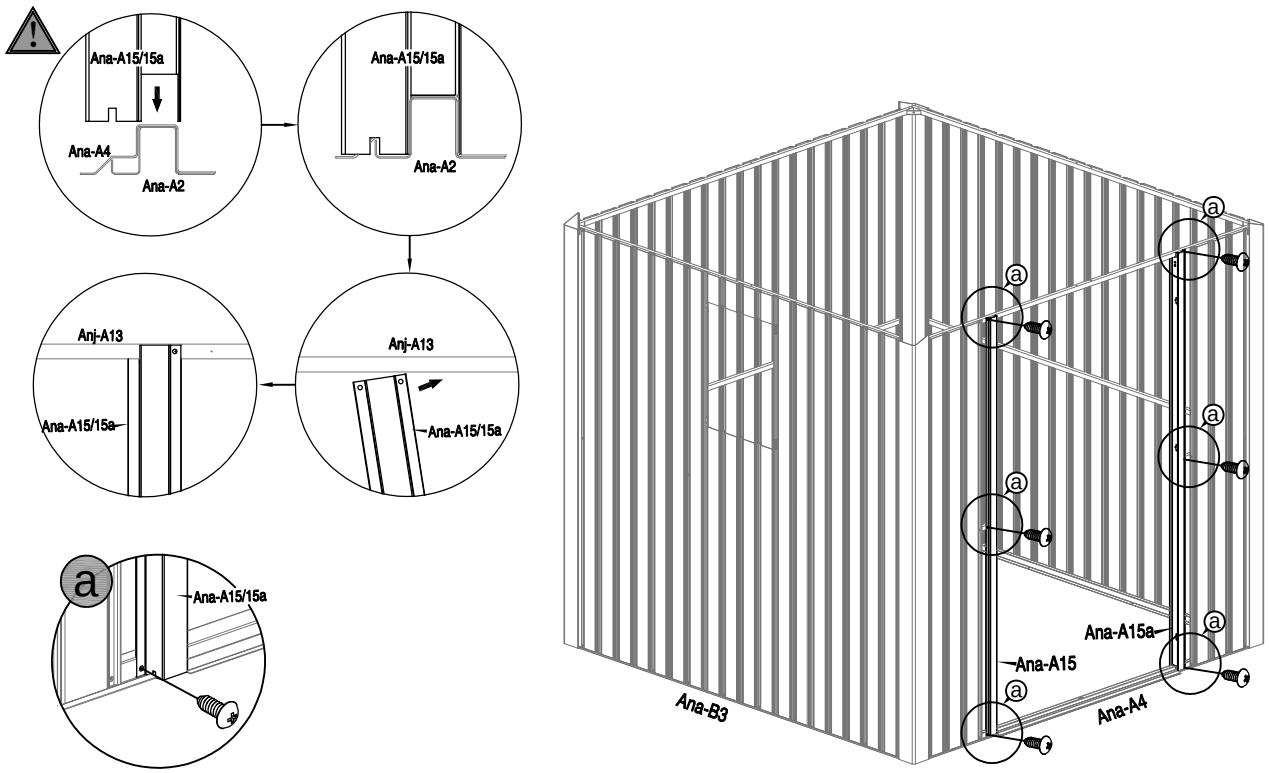

20

Ana-A16 x1

Ana-A16a x1

Anj-B41 x10

Anj-B40 x6

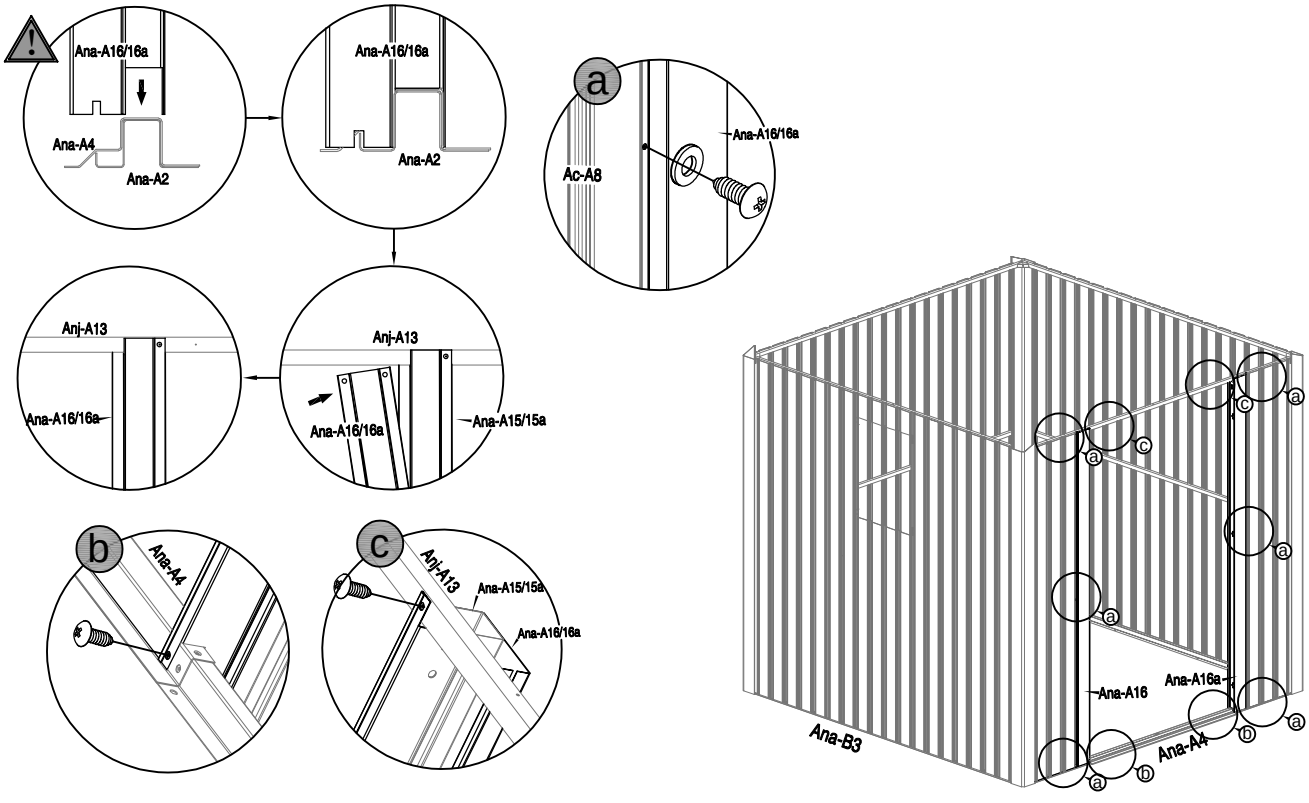

21



Ana-A17 x1



Anj-A44 x4

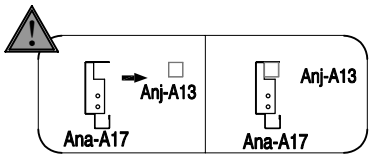

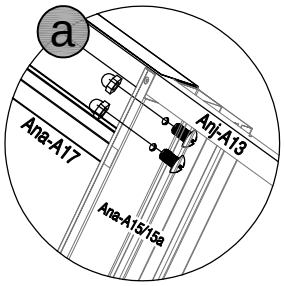

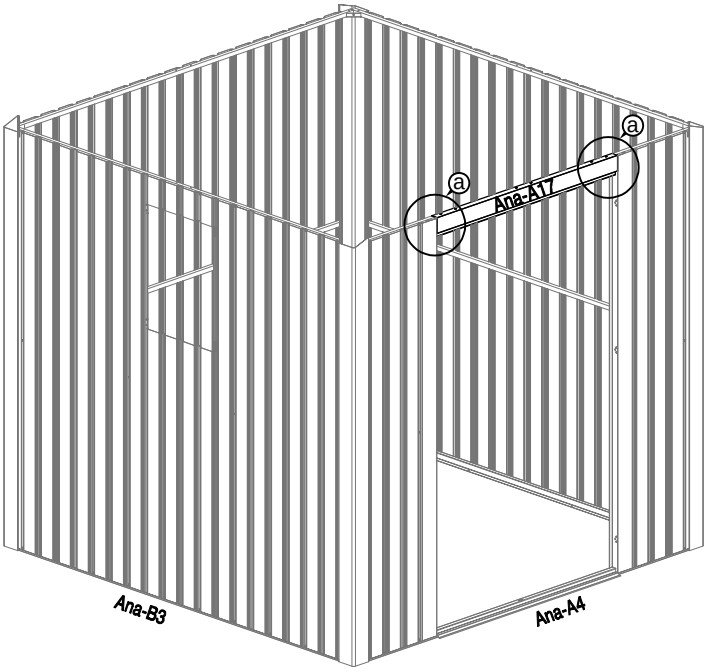

22



Anj-A18 x2

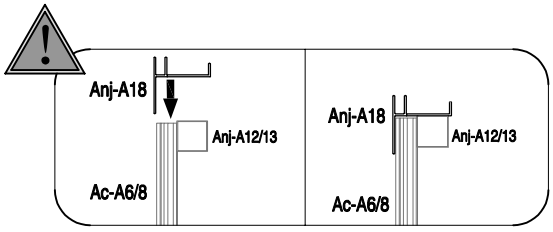

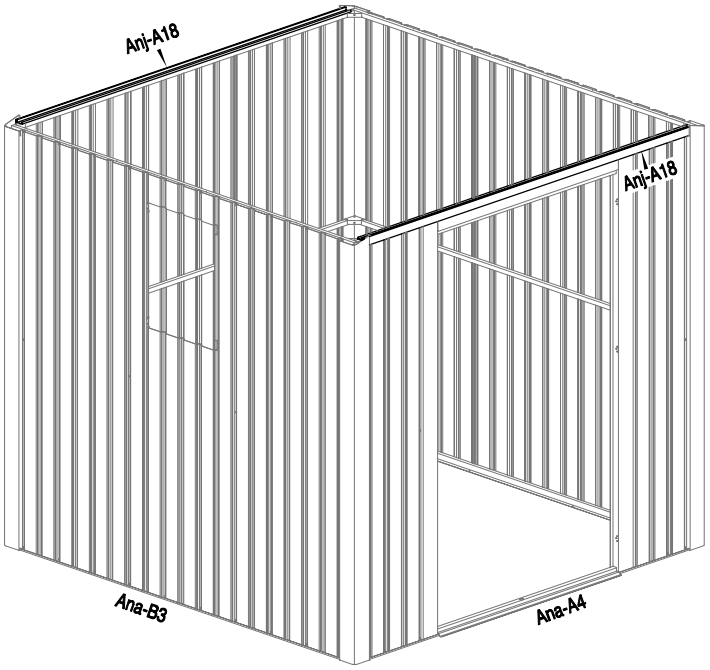

23

Ac-A18 x2

Anj-B41 x16

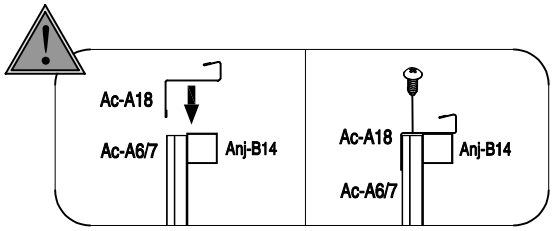

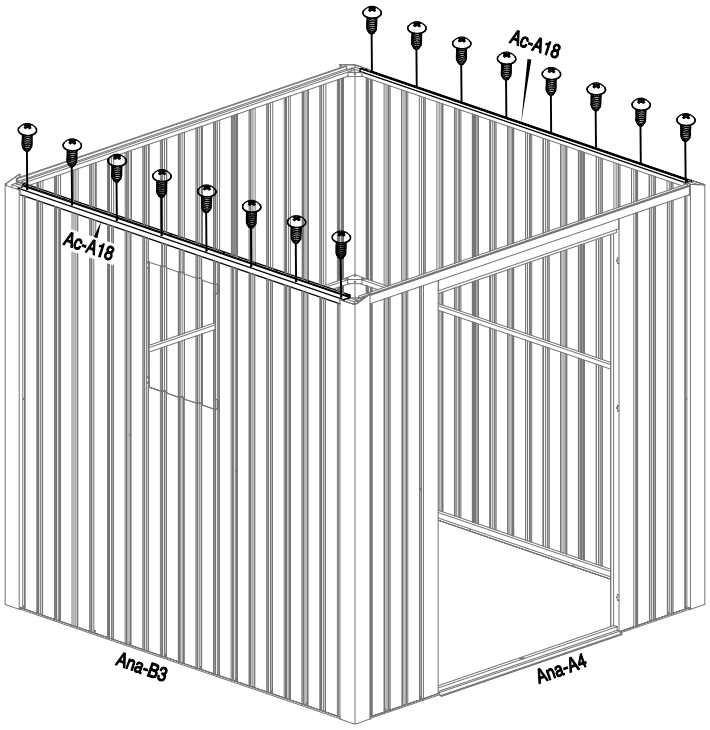

24

Anj-A22 x2

Anj-A22a x4

Anj-B41 x16

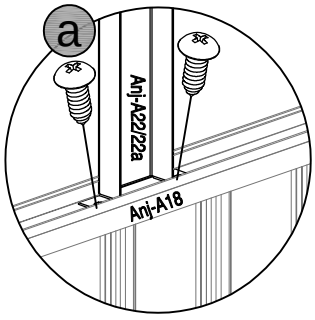

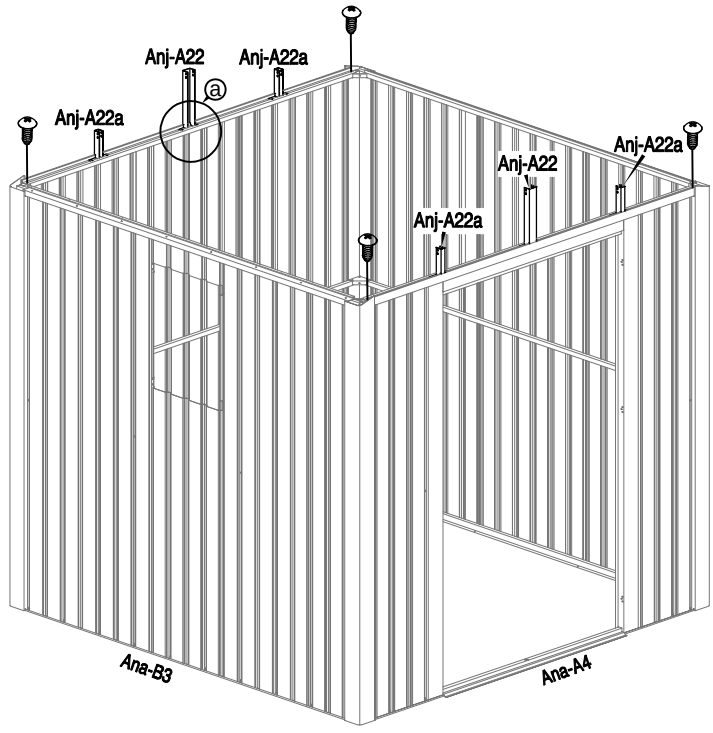

25				
	Anj-B23 x1	Anj-B23a x2	Anj-B41 x24	

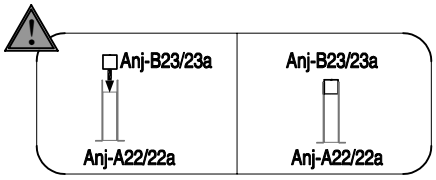

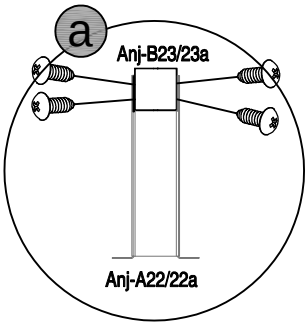

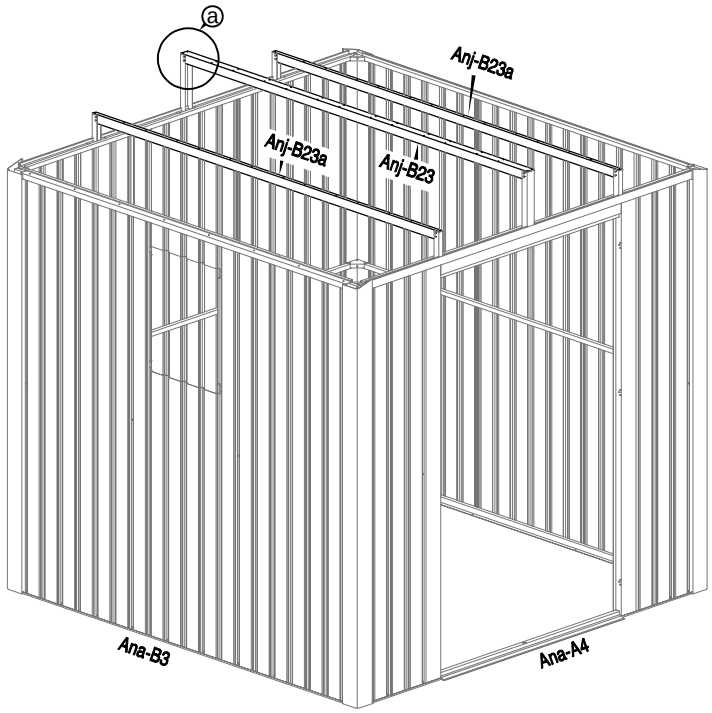

26		
	Anj-A21 x2	

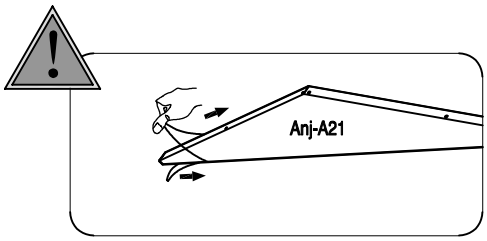

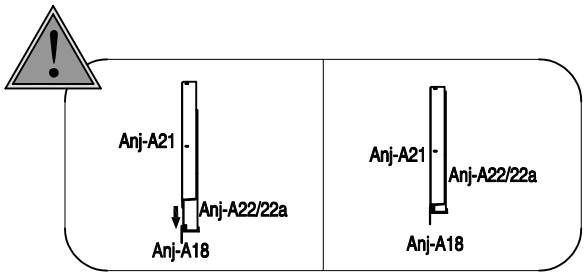

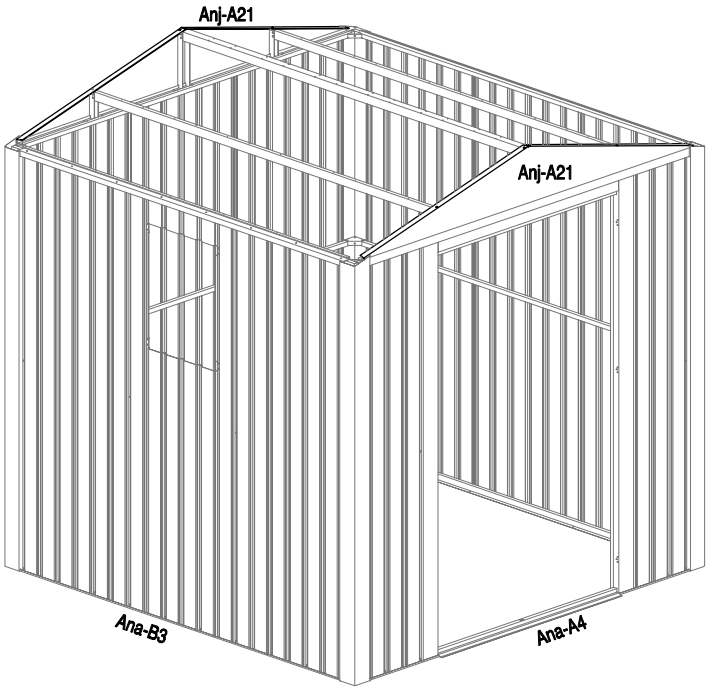

27					
	Anj-A25 x1	Anj-A25a x1	Anj-B41 x22	Anj-B40 x22	

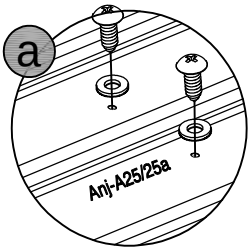

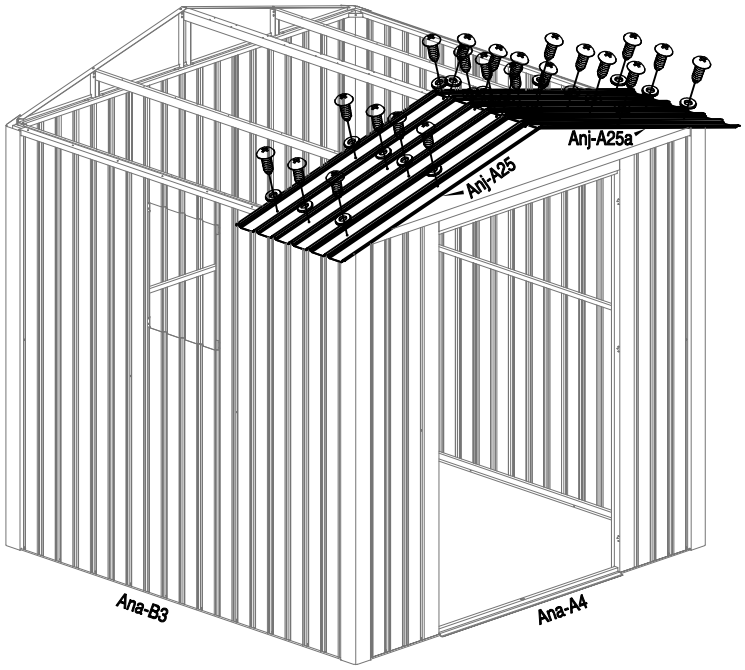

28					
	Anj-B25 x1	Anj-A24 x1	Anj-B41 x20	Anj-B40 x20	

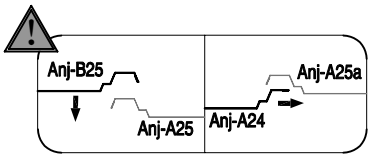

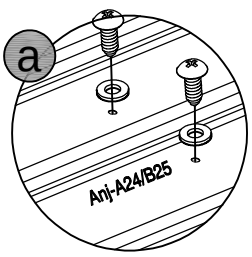

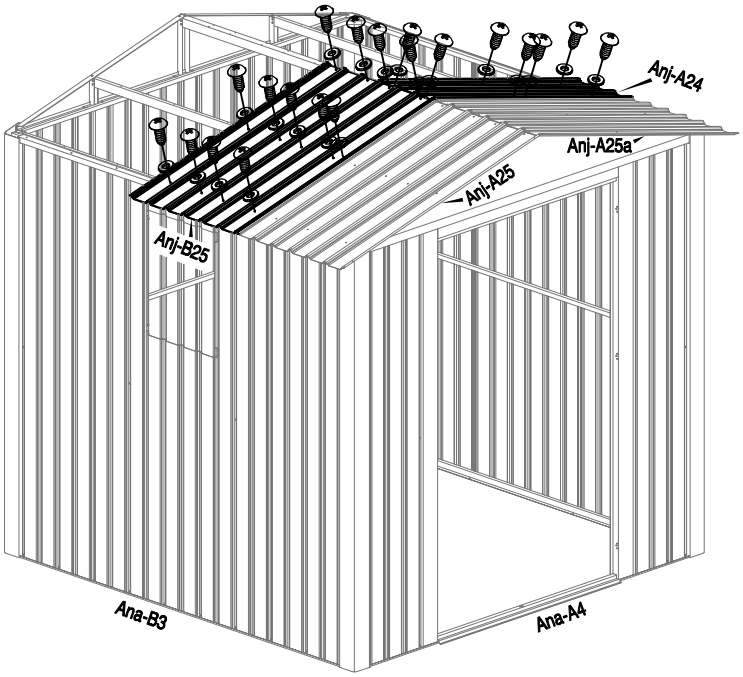

29					
	Anj-B25 x1	Anj-A24 x1	Anj-B41 x20	Anj-B40 x20	

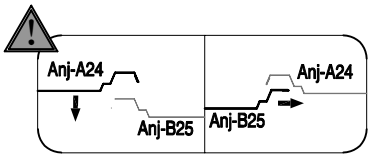

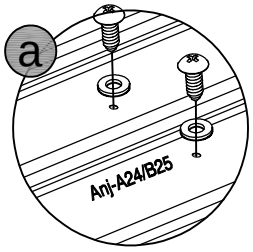

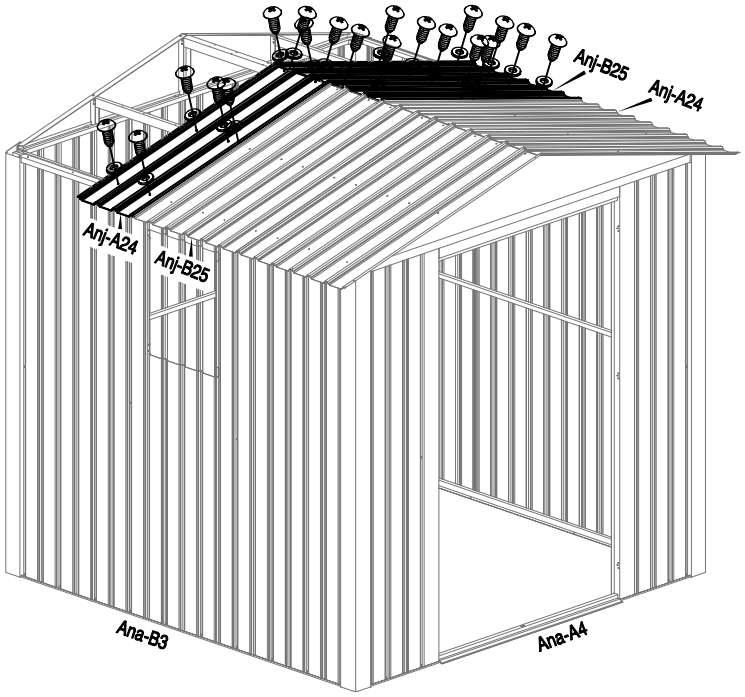

30					
	Anj-A25 x1	Anj-A25a x1	Anj-B41 x24	Anj-B40 x24	

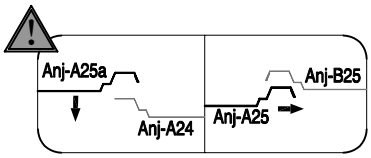

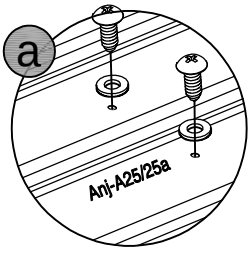

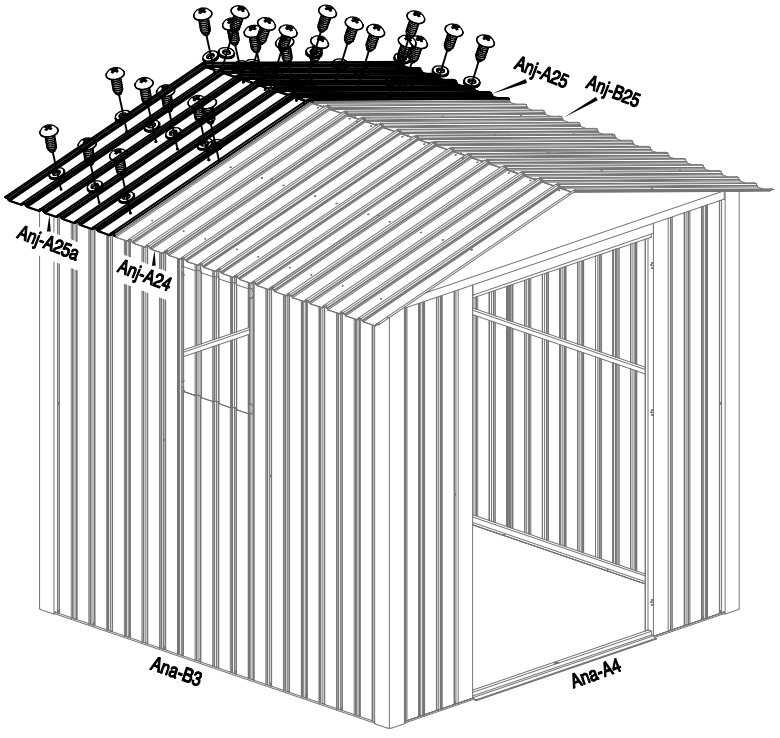

31				
	Anj-B28 x1	Anj-B46 x8	Anj-B40 x8	

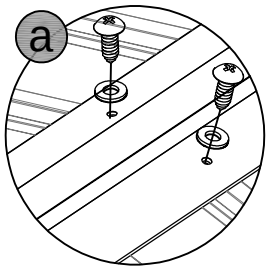

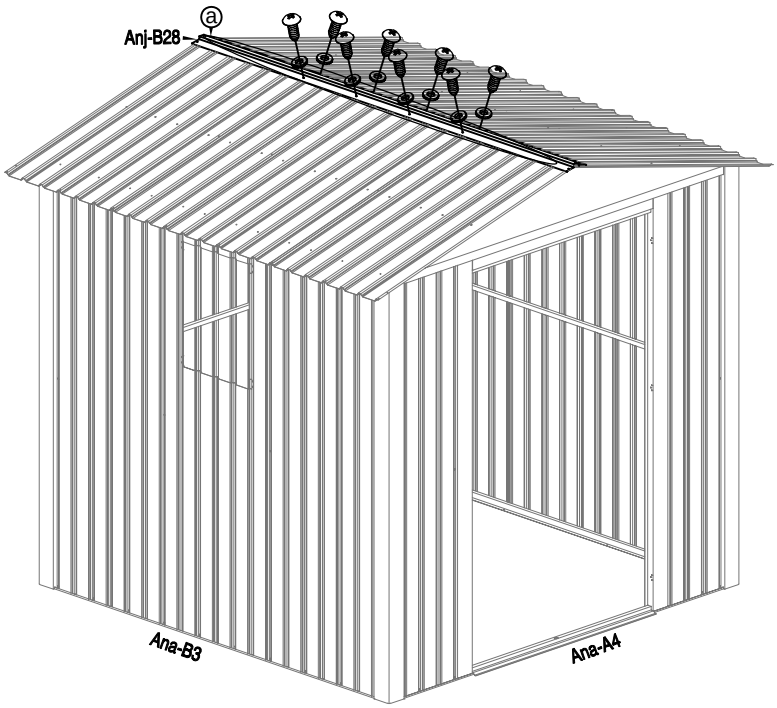

32					
	Anj-A27 x2	Anj-A27a x2	Anj-B41 x4	Anj-B40 x4	

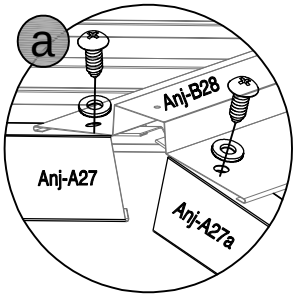

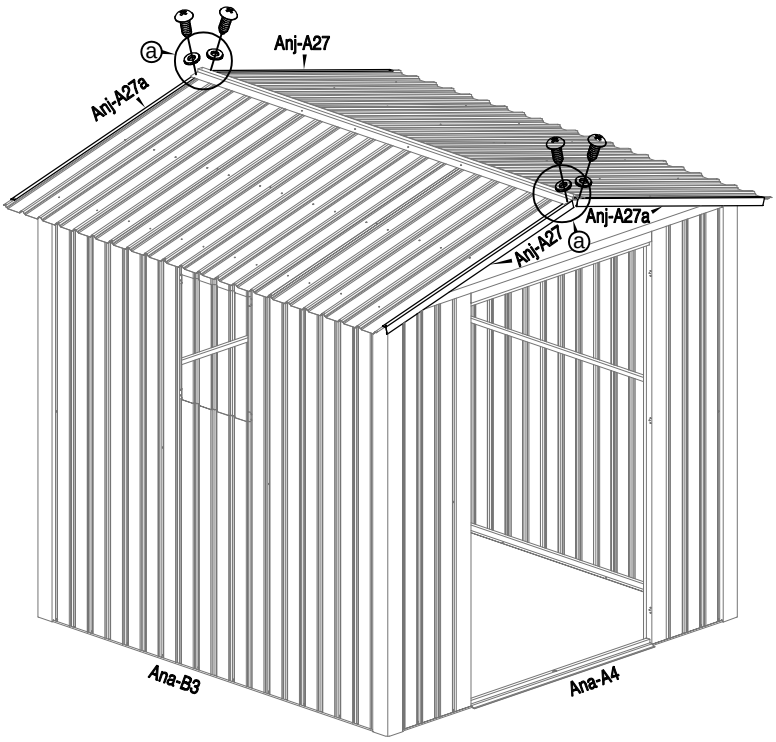

33			
	 T-P4 x2	 Anj-B41 x2	

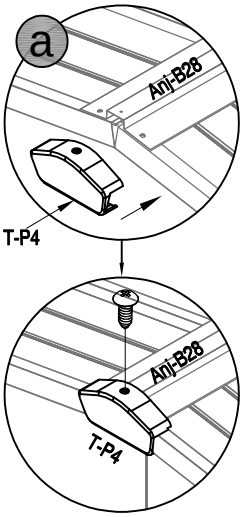

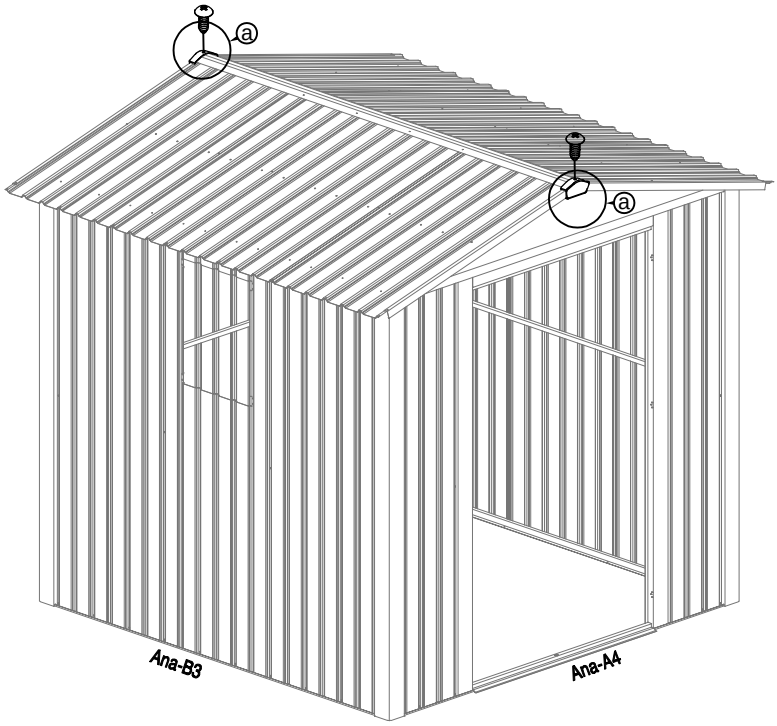

34				
	 Ac-A26 x2	 Anj-B41 x12	 Anj-B40 x12	

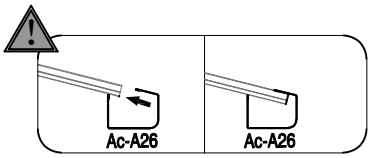

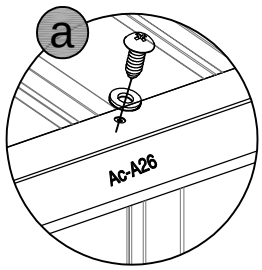

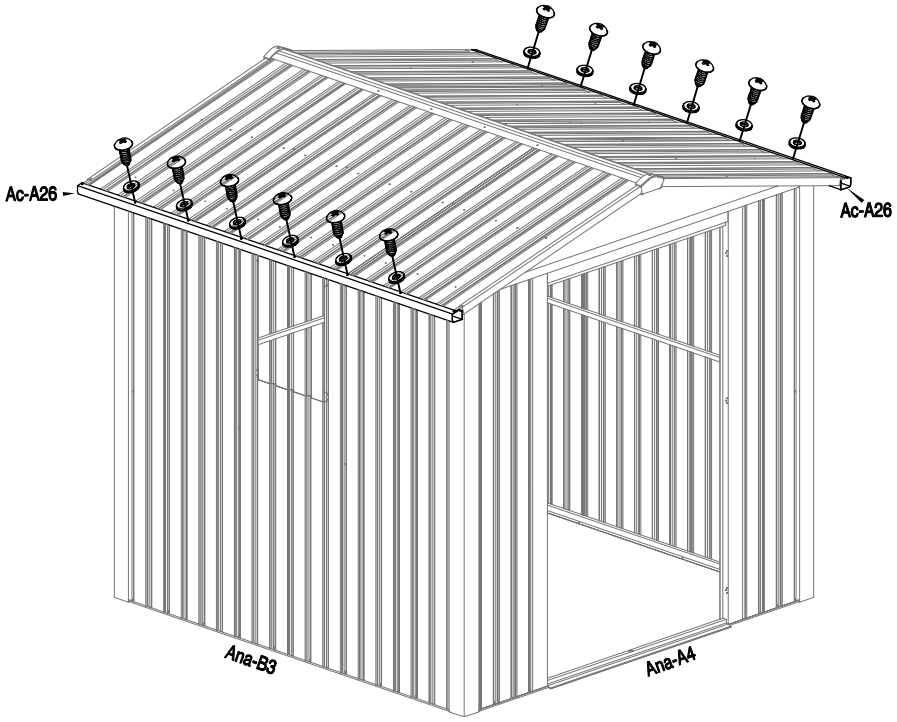

35				
	 Ac-P1 x2	 Ac-P2 x2	 Anj-B41 x8	

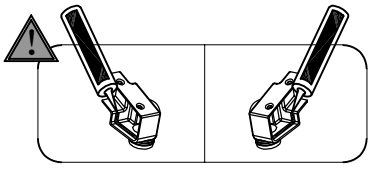

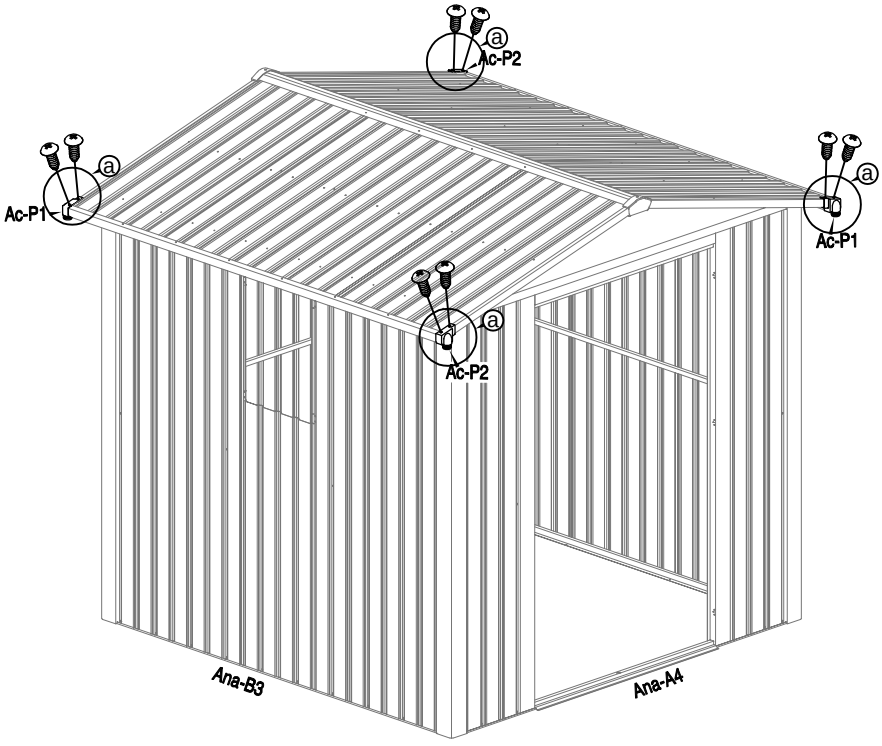

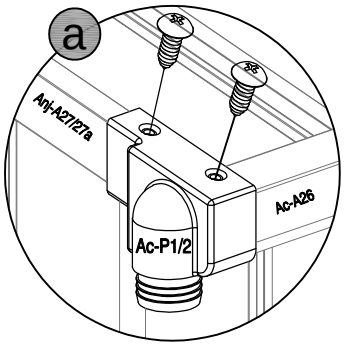

36			
	 Ab-50 x6	 Anj-A43 x18	

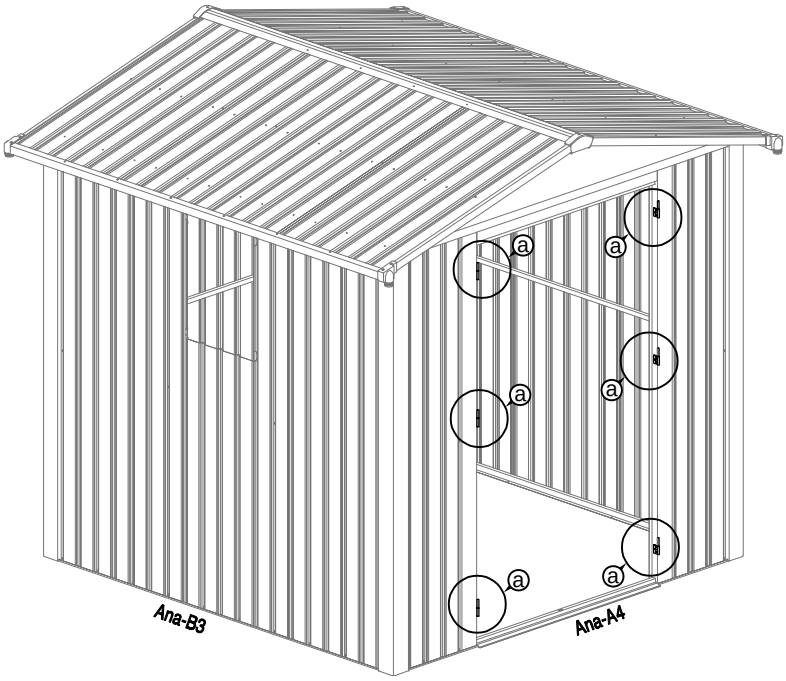

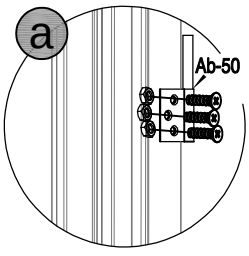

37							
Ac-A29 x1	Ac-A29a x1	 Ana-54 x1	 Ana-55 x1	 Ana-56 x1	 Ana-57 x1	 Ana-58 x3	

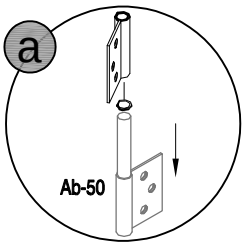

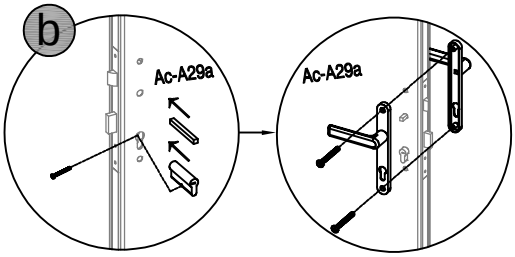

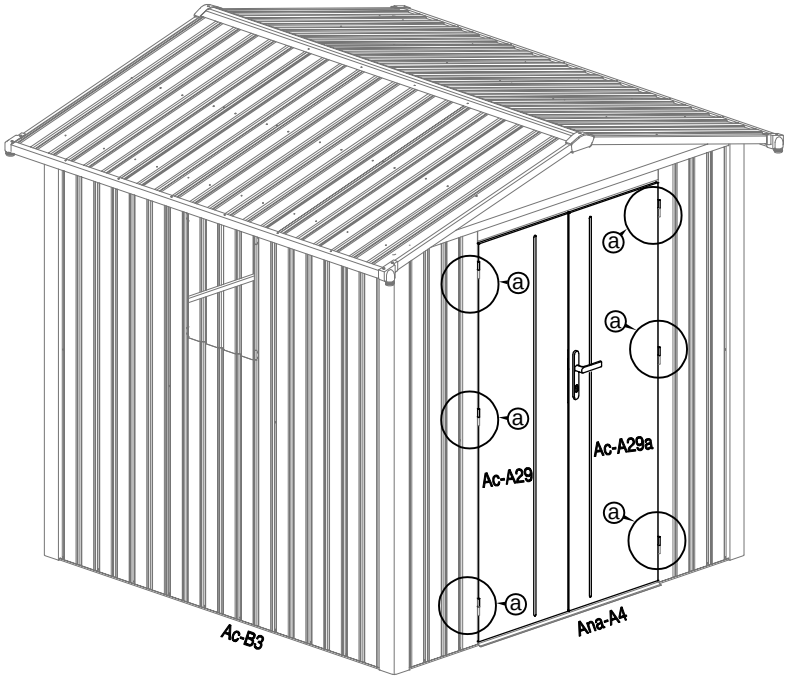

38		
 Ana-P6 x1	 Anj-B41 x4	

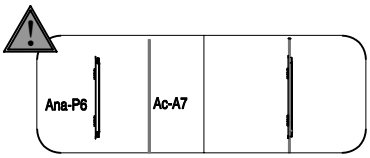

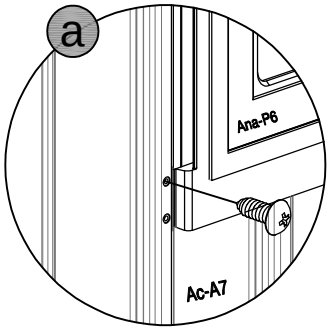

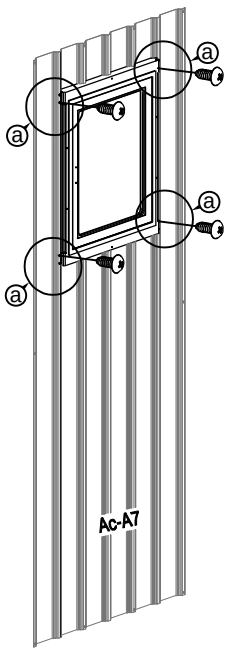

39



Ana-P7 x1



Anj-B41 x10

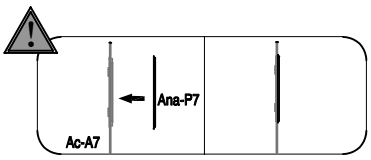

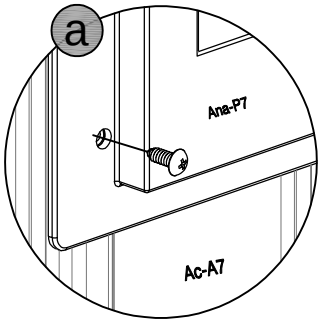

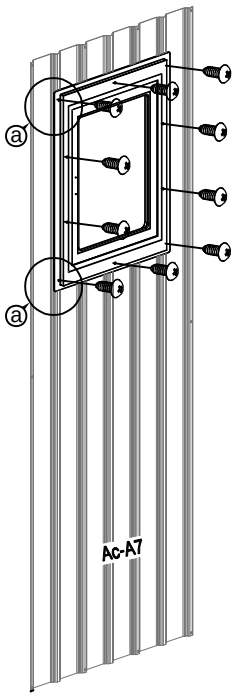

40



Ana-P8 x1



Ana-A42 x2

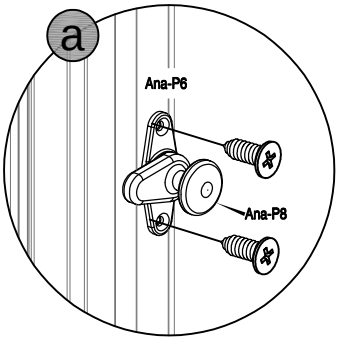

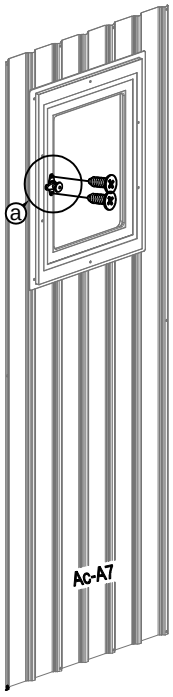

41

Anj-A37 x4M

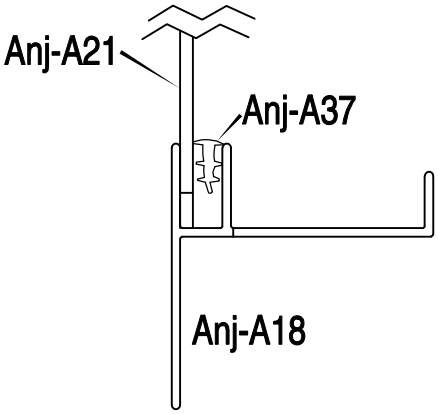

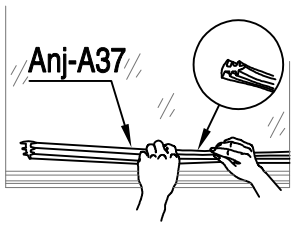

42

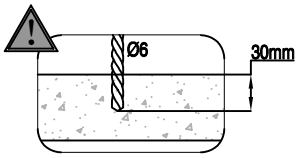

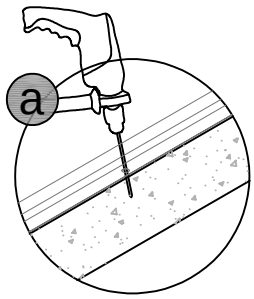

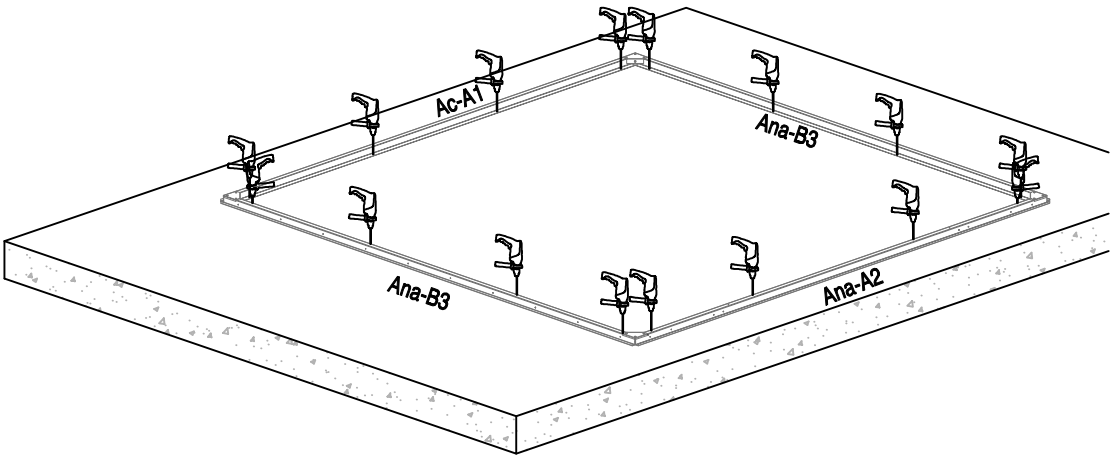

43



Anj-B45 x16

