Amy-C

OWNER'S MANUAL /
Instructions for Assembly

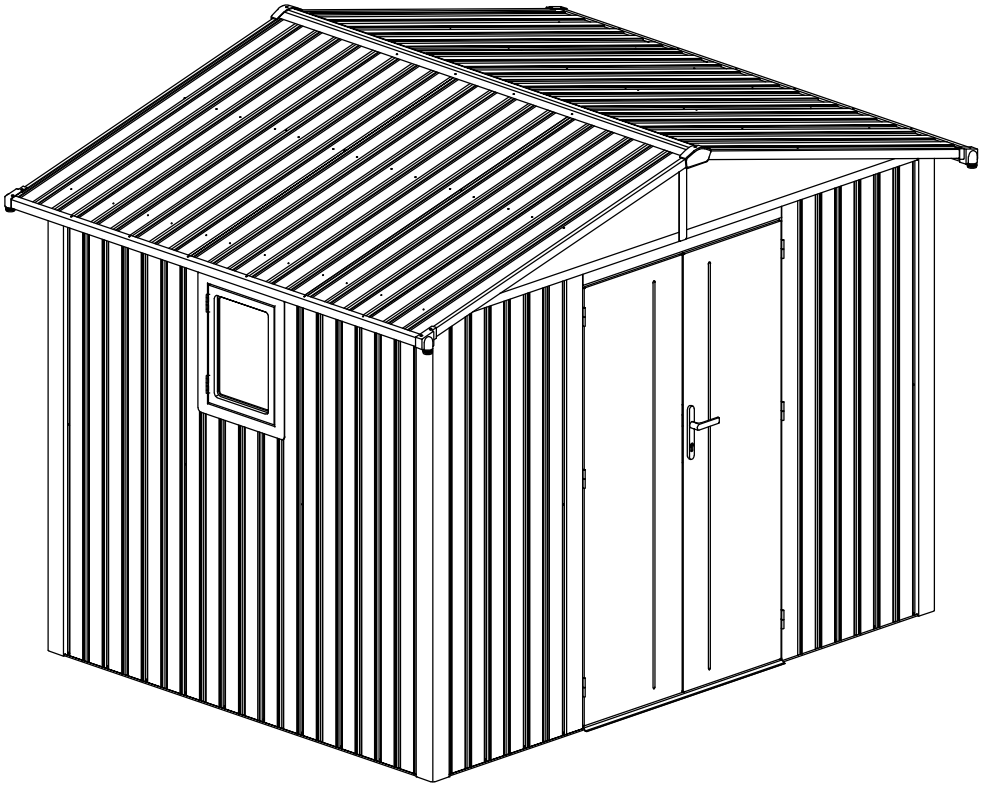

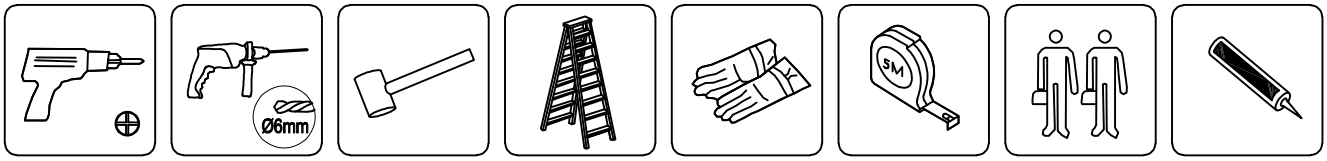

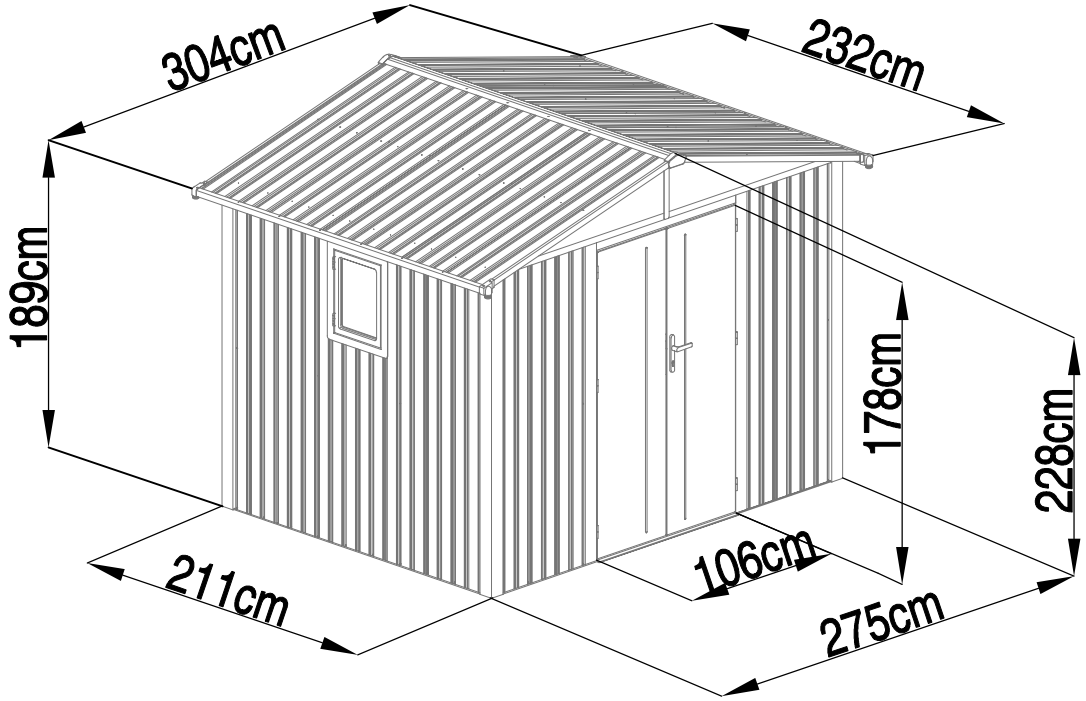

Area of installation requirement:

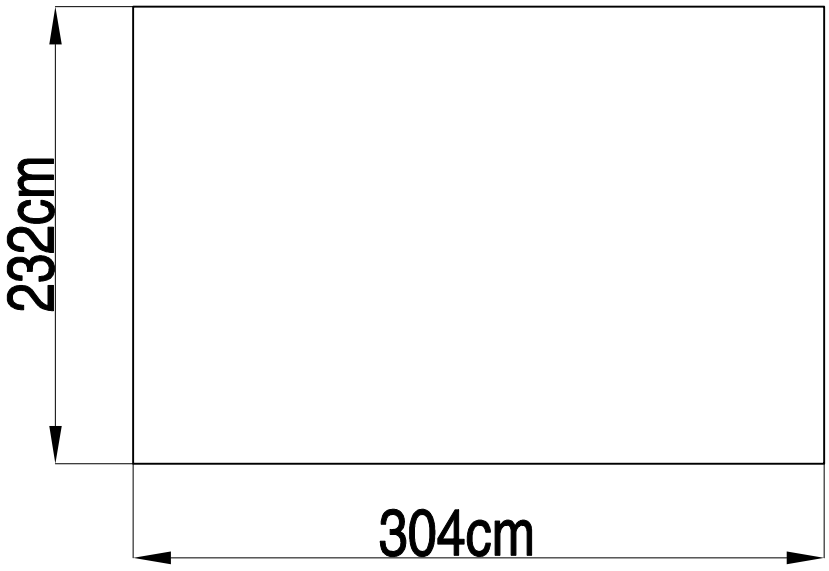

Amy-C:

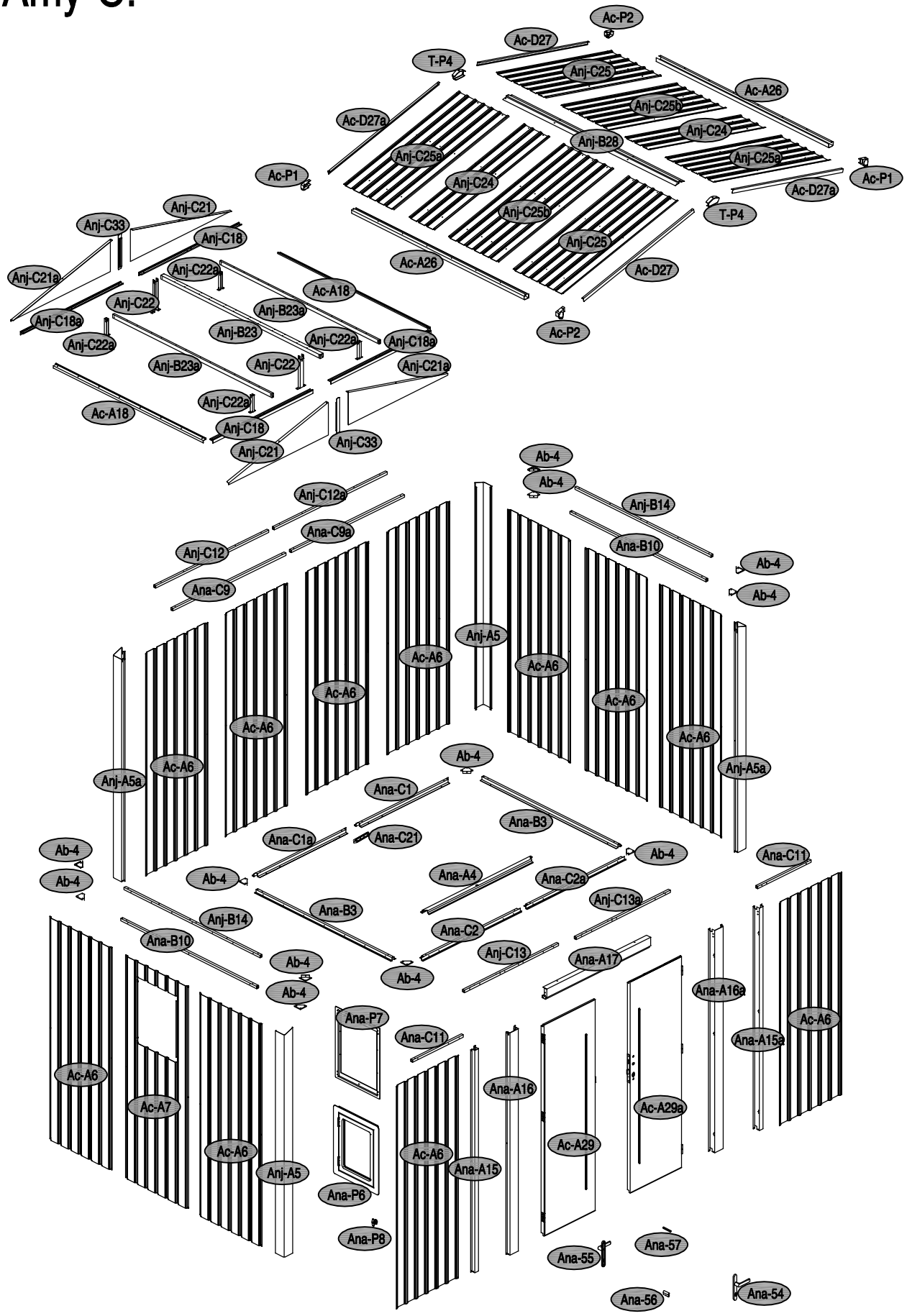
Ac-P2
Ac-D27
T-P4
Anj-C25
Ac-A26
Anj-C25b
Ac-D27a
Anj-C24
Anj-B28
Anj-C25a
Anj-C25a
Ac-P1
Anj-C24
Ac-P1
Ac-D27a
Anj-C25b
T-P4
Anj-C25
Ac-A26
Ac-D27
Ac-P2
Anj-C21
Anj-C33
Anj-C18
Anj-C21a
Anj-C22a
Ac-A18
Anj-C22
Anj-B23a
Anj-C18a
Anj-B23
Anj-C22a
Anj-C18a
Anj-C22a
Anj-B23a
Anj-C22
Anj-C21a
Anj-C22a
Ac-A18
Anj-C18
Anj-C21
Anj-C33
Ab-4
Ab-4
Anj-C12a
Anj-B14
Ana-C9a
Ana-B10
Anj-C12
Ab-4
Ana-C9
Ab-4
Anj-A5
Ac-A6
Ac-A6
Ac-A6
Ac-A6
Ac-A6
Ac-A6
Ac-A6
Anj-A5a
Anj-A5a
Ab-4
Ana-C1
Ana-B3
Ana-C1a
Ana-C21
Ab-4
Ana-C11
Ab-4
Ab-4
Ana-A4
Ana-C2a
Anj-C13a
Ana-B3
Anj-B14
Ana-C2
Ana-B10
Anj-C13
Ana-A17
Ab-4
Ab-4
Ab-4
Ana-A16a
Ana-P7
Ana-C11
Ac-A6
Ana-A15a
Ac-A6
Ana-A16
Ac-A7
Ac-A29a
Ac-A6
Ac-A29
Ac-A6
Ana-A15
Anj-A5
Ana-P6
Ana-P8
Ana-55
Ana-57
Ana-56
Ana-54

NO.	IMAGE	mm	QTY
UNDER			
Ana-C1		1458	x1
Ana-C1a		1245	x1
Ana-C2		1371.5	x1
Ana-C2a		1331.5	x1
Ana-B3		2064	x2
Ana-A4		1130	x1
MIDDLE			
Anj-A5		1925	x2
Anj-A5a		1925	x2
Ac-A6		1900	x11
Ac-A7		1900	x1
Ana-C9	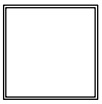	1521.5	x1
Ana-C9a		1191.5	x1
Ana-B10		2063	x2
Ana-C11		783.5	x2
Anj-C12		1521.5	x1
Anj-C12a		1191.5	x1
Anj-C13		1521.5	x1
Anj-C13a		1191.5	x1
Anj-B14		2063	x2
Ana-A15		1900	x1
Ana-A15a		1900	x1
Ana-A16	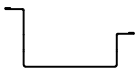	1900	x1
Ana-A16a		1900	x1
Ana-A17		1087.5	x1
Anj-C18		1309.5	x2
Anj-C18a		1309.5	x2
Ana-C21		190	x1
Anj-C22		339	x2
Anj-C22a		179	x4
Anj-B23		2084.5	x1
Anj-B23a		2084.5	x2
Anj-C21	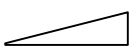	1302.5	x2
Anj-C21a		1302.5	x2
Anj-C33		371.5	x2
Ac-A18		1959	x2
DOOR			
Ac-A29		1804	x1
Ac-A29a		1804	x1

NO.	IMAGE	mm	QTY
TOP			
Anj-C24		1552	x2
Anj-C25		1552	x2
Anj-C25a		1552	x2
Anj-C25b		1552	x2
Ac-A26		2256.5	x2
Ac-D27		1489	x2
Ac-D27a		1489	x2
Anj-B28		2256.5	x1
ANNEX			
Ab-4			x12
Anj-C37			5.2M
Ac-P1			x2
Ac-P2			x2
T-P4			x2
Ana-P6			x1
Ana-P7			x1
Ana-P8			x1
Ab-50			x6
Ana-54			x1
Ana-55			x1
Ana-56			x1
Ana-57			x1
Ana-58		M5x45	x3
Anj-C40			x221
Anj-C41		ST4x10	x365
Ana-A42		ST4x10	x2
Anj-A43		M4x10	x18
Anj-A44		M5x8	x4
Anj-C45		ST4x25	x17
Anj-B46		ST4x16	x8
Anj-C49		M6x12	x2

1							
	Ana-C1 x1	Ana-C1a x1	Ana-C2 x1	Ana-C2a x1	Ana-B3 x2	Ana-C21 x1	Anj-C41 x8

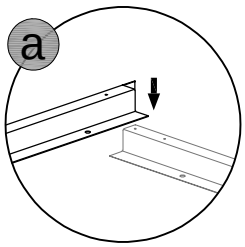

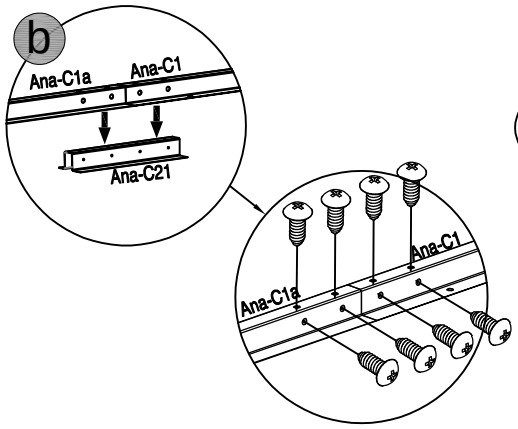

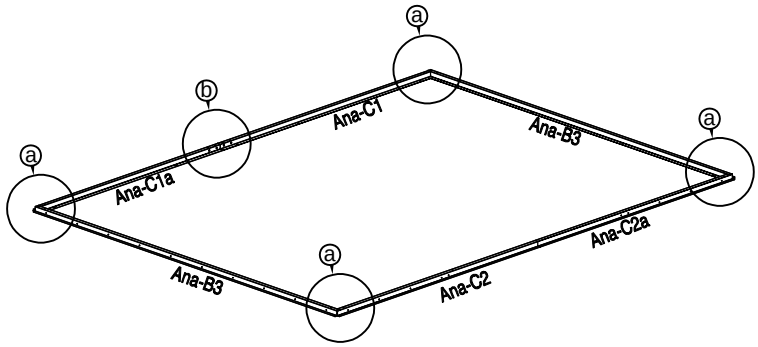

2		
	Ab-4 x4	Anj-C41 x12

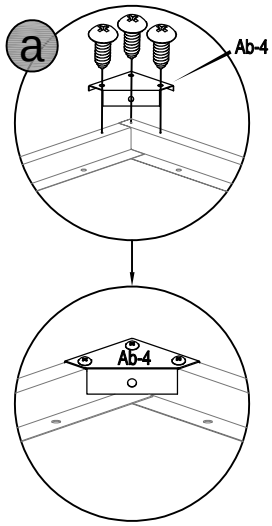

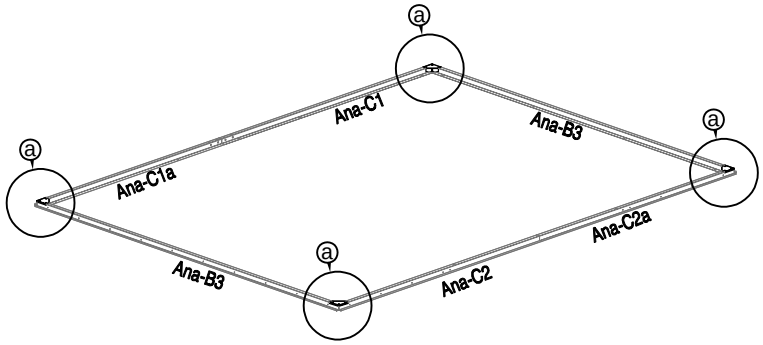

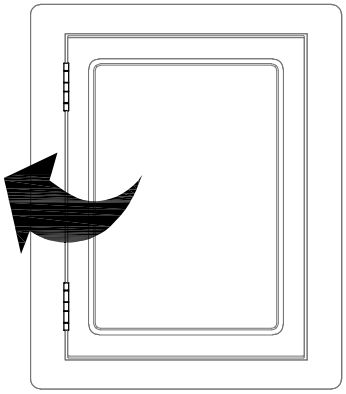

Or

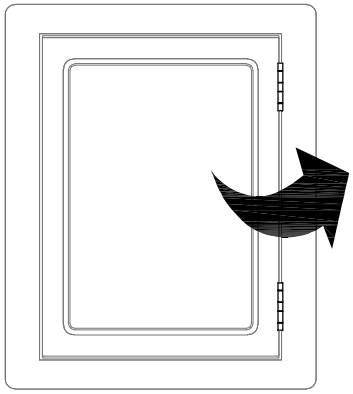

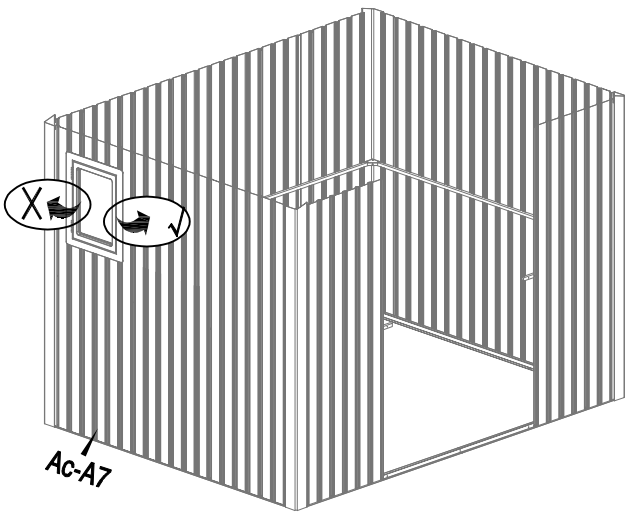

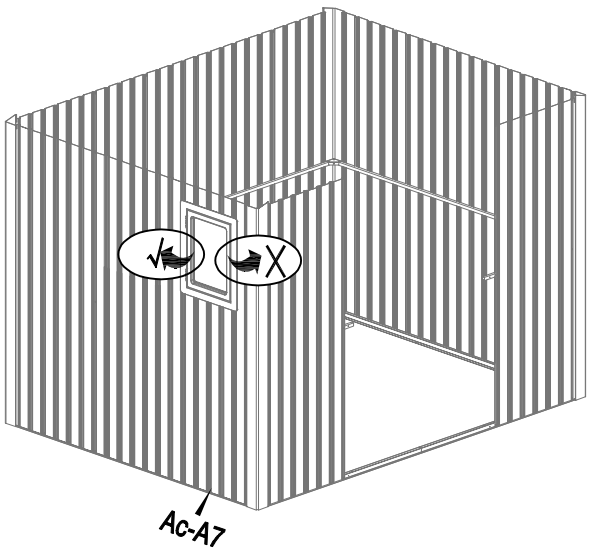

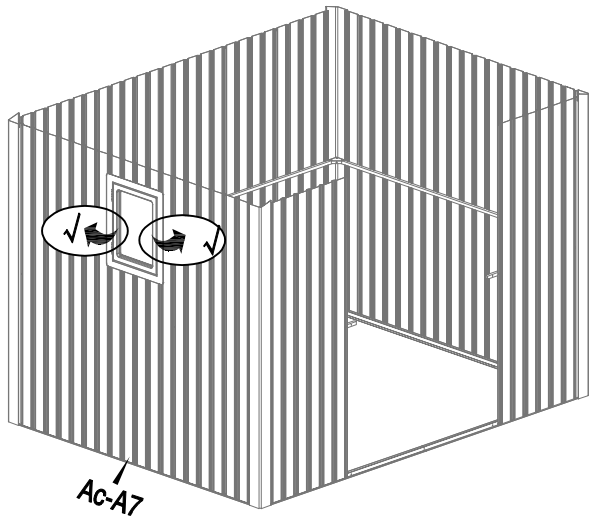
√
√
Ac-A7

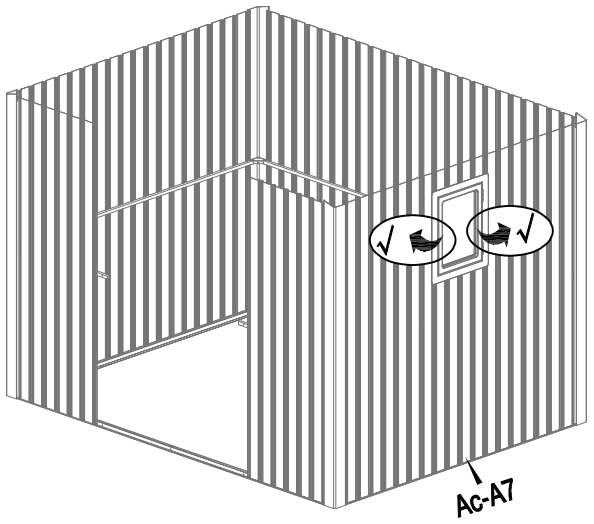
√
√
Ac-A7

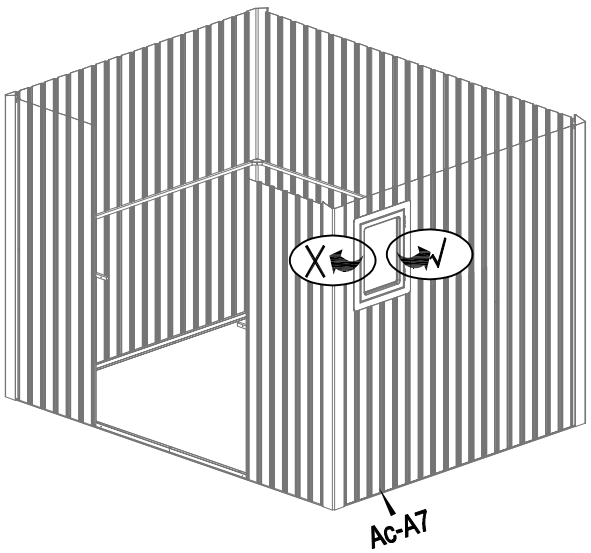
X
√
Ac-A7

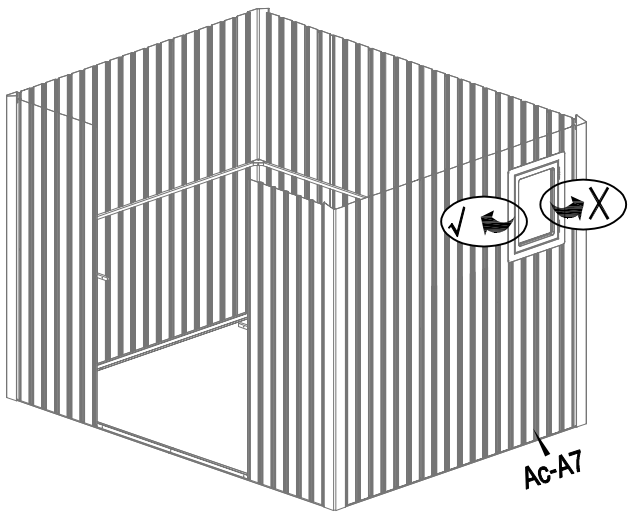
√
X
Ac-A7

3						
	Ac-A6 x1	Anj-A5 x1	Ana-B10 x1	Anj-C41 x5	Anj-C40 x5	

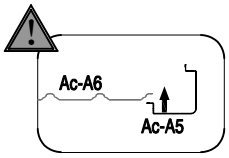

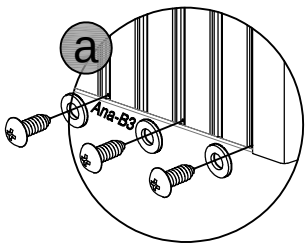

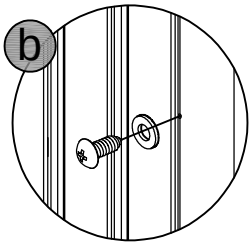

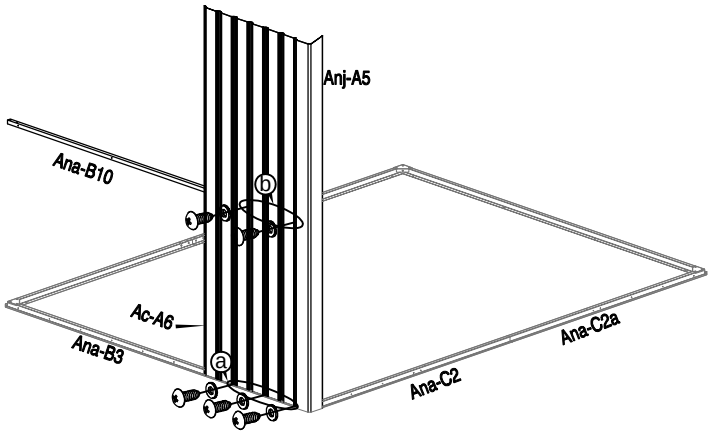

4					
	Ac-A6 x1	Ana-C11 x1	Anj-C41 x5	Anj-C40 x5	

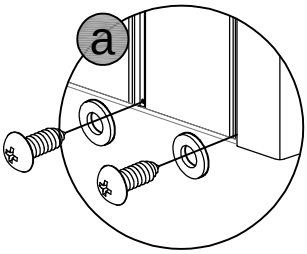

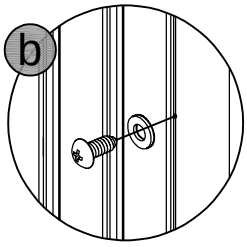

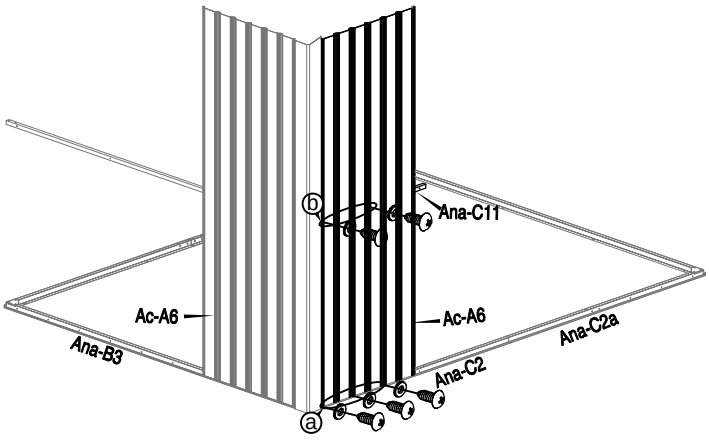

5				
	Ac-A7 x1	Anj-C41 x5	Anj-C40 x5	

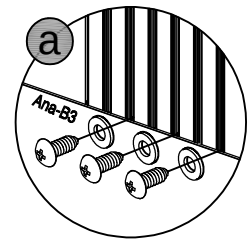

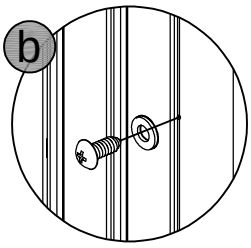

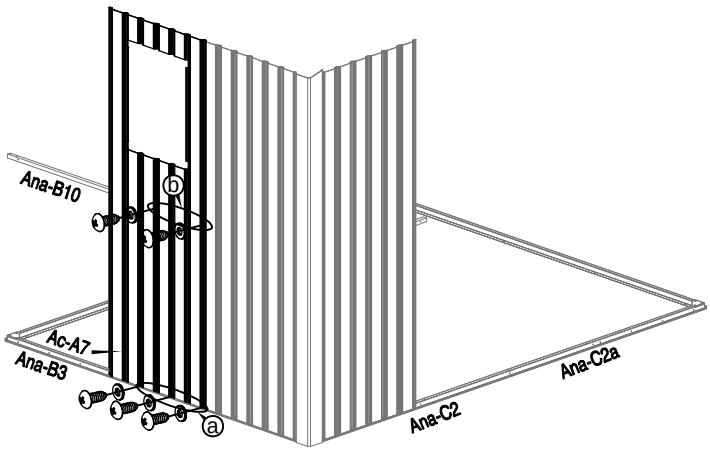

6					
	Ac-A6 x1	Anj-A5a x1	Anj-C41 x7	Anj-C40 x7	

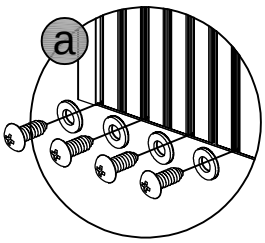

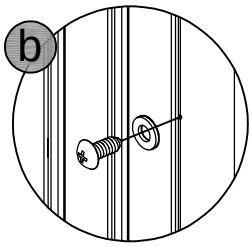

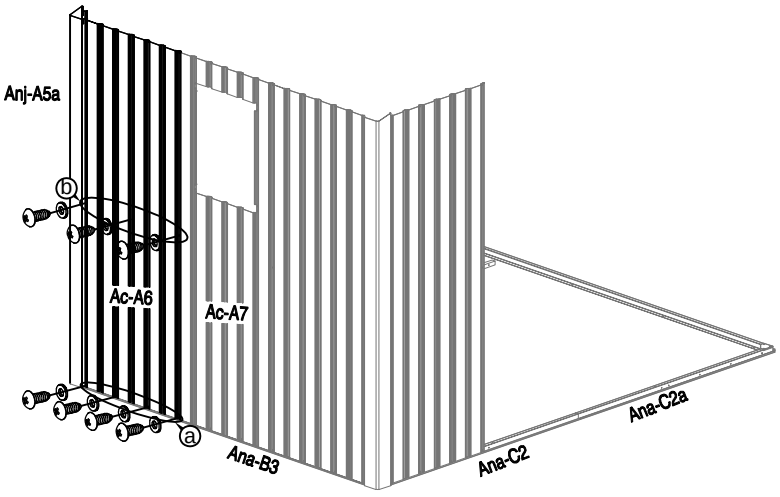

7					
	Ac-A6 x1	Ana-C9 x1	Anj-C41 x5	Anj-C40 x5	

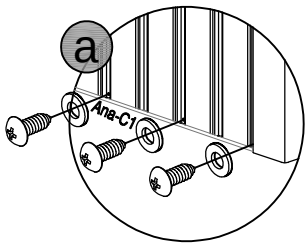

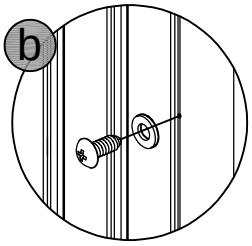

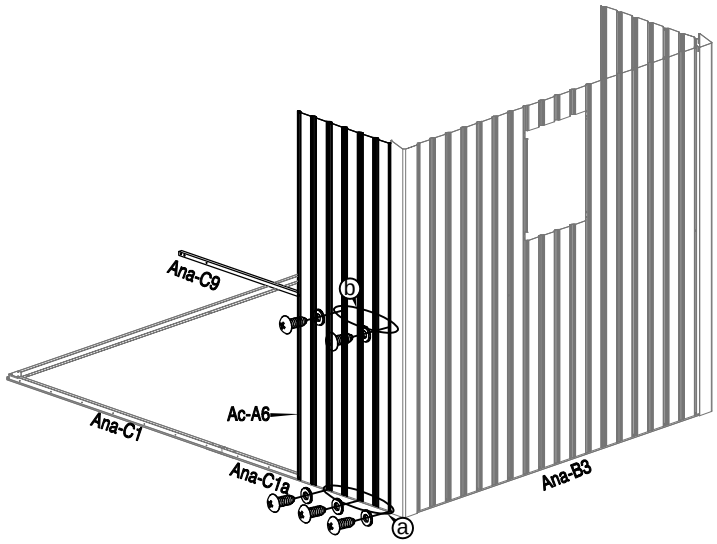

8					
	Ac-A6 x1	Ana-C9a x1	Anj-C41 x9	Anj-C40 x5	

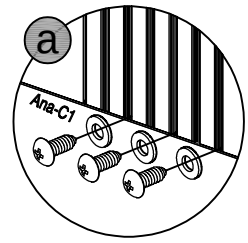

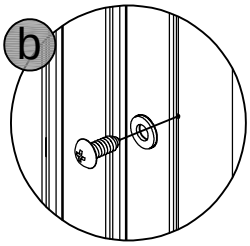

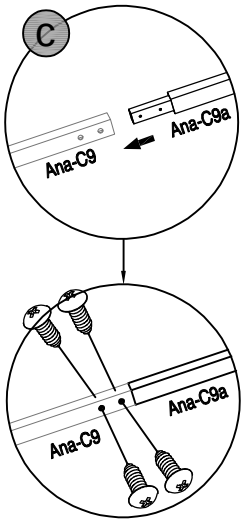

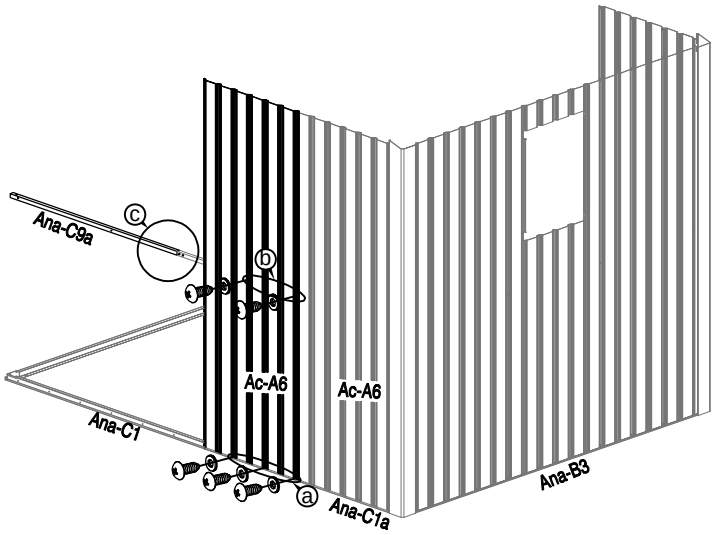

9				
	Ac-A6 x1	Anj-C41 x5	Anj-C40 x5	

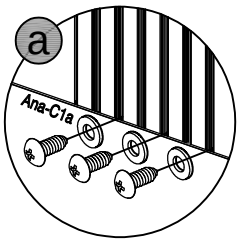

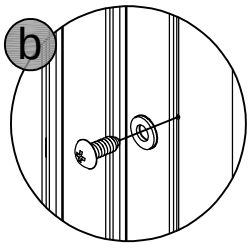

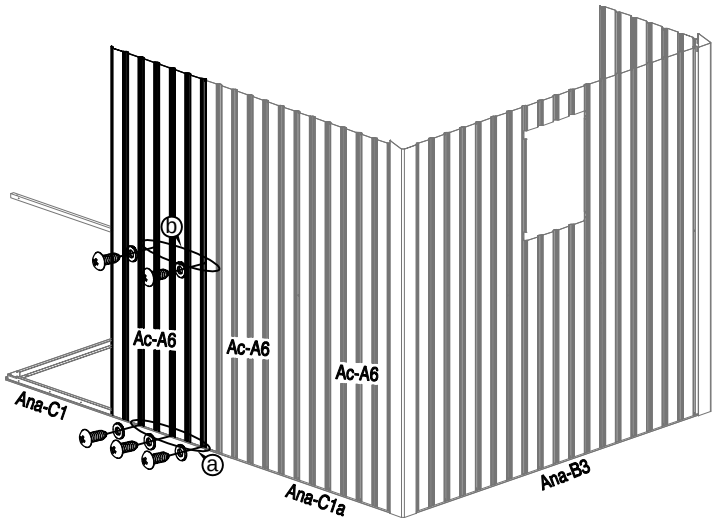

10					
	Ac-A6 x1	Anj-A5 x1	Anj-C41 x7	Anj-C40 x7	

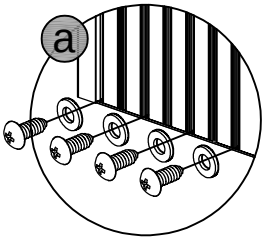

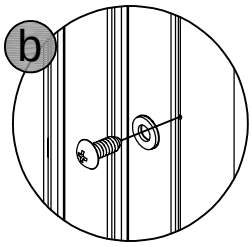

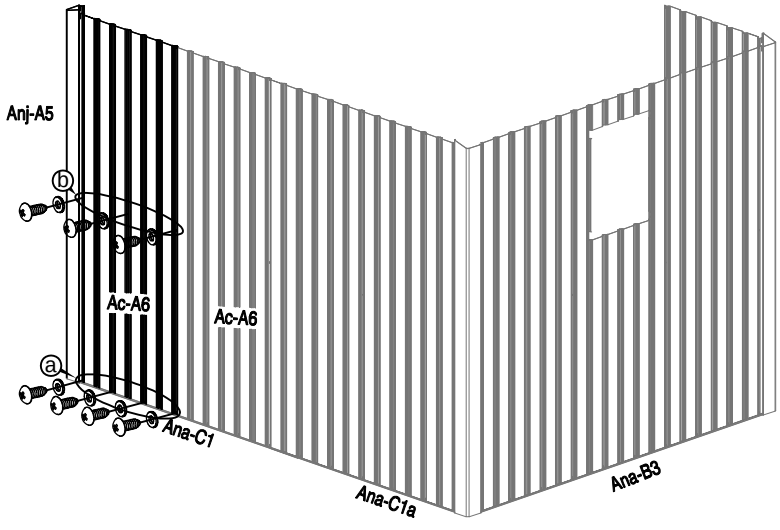

11					
	Ac-A6 x1	Ana-B10 x1	Anj-C41 x5	Anj-C40 x5	

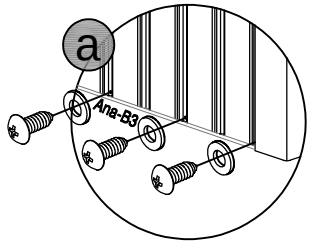

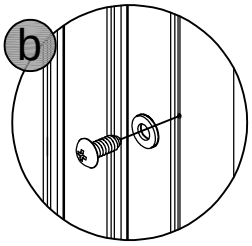

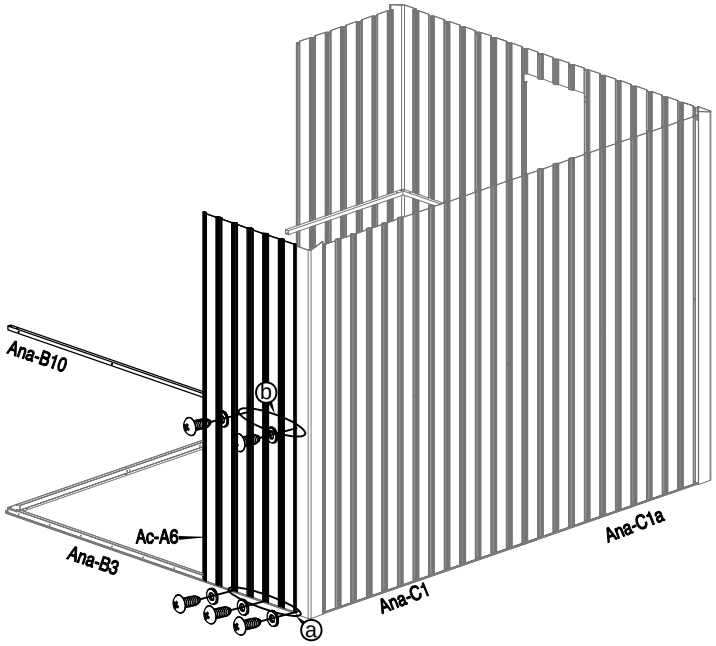

12				
	Ac-A6 x1	Anj-C41 x5	Anj-C40 x5	

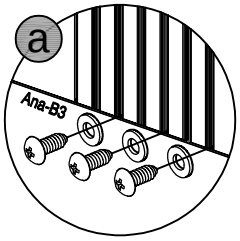

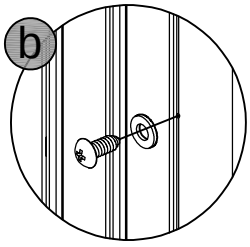

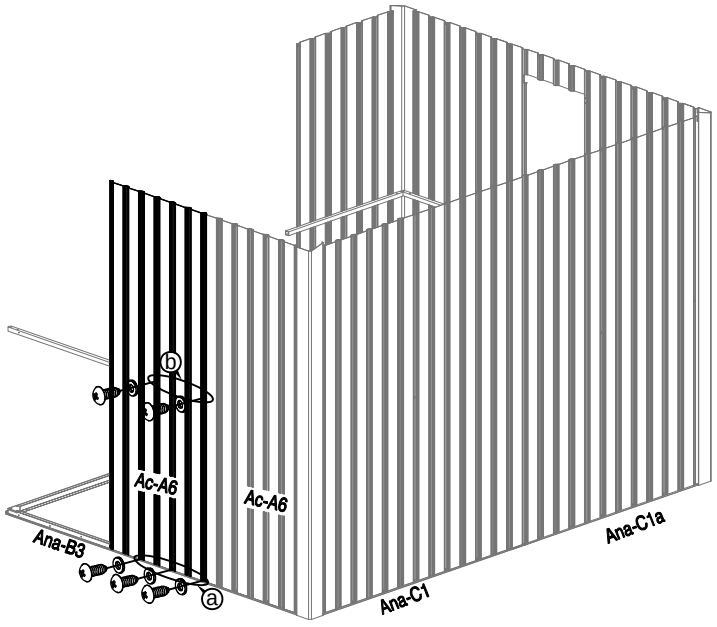

13					
	Ac-A6 x1	Anj-A5a x1	Anj-C41 x7	Anj-C40 x7	

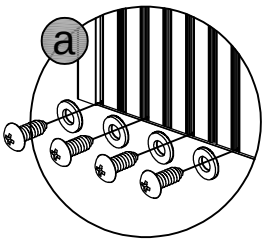

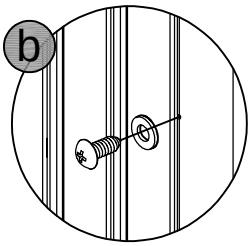

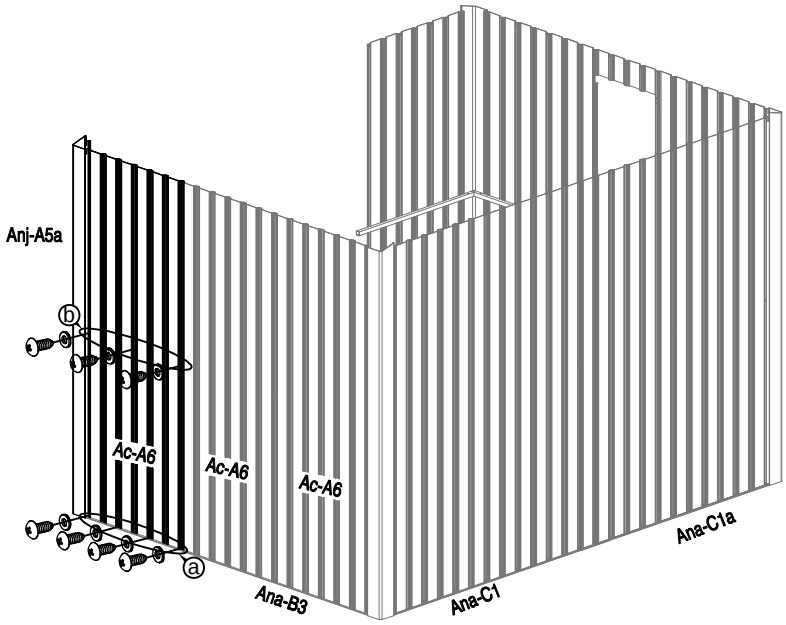

14					
	Ac-A6 x1	Ana-C11 x1	Anj-C41 x5	Anj-C40 x5	

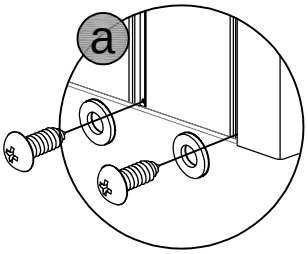

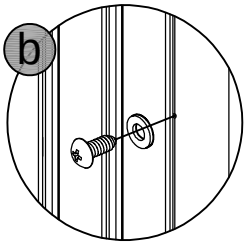

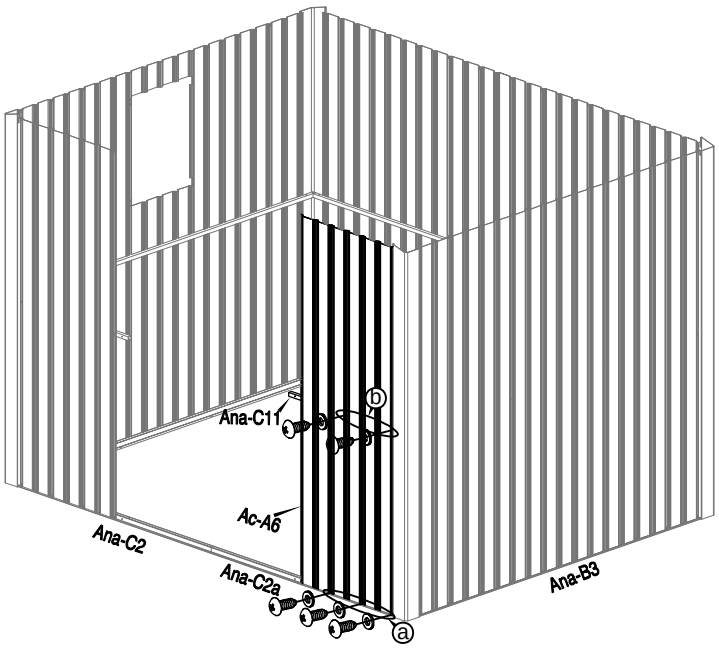

15			
	Ab-4 x4	Anj-C41 x12	

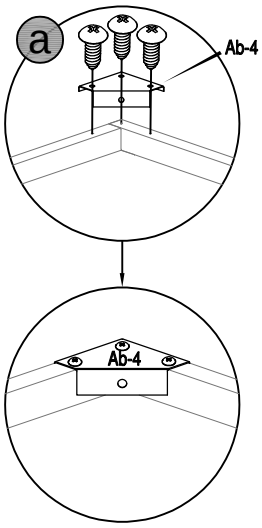

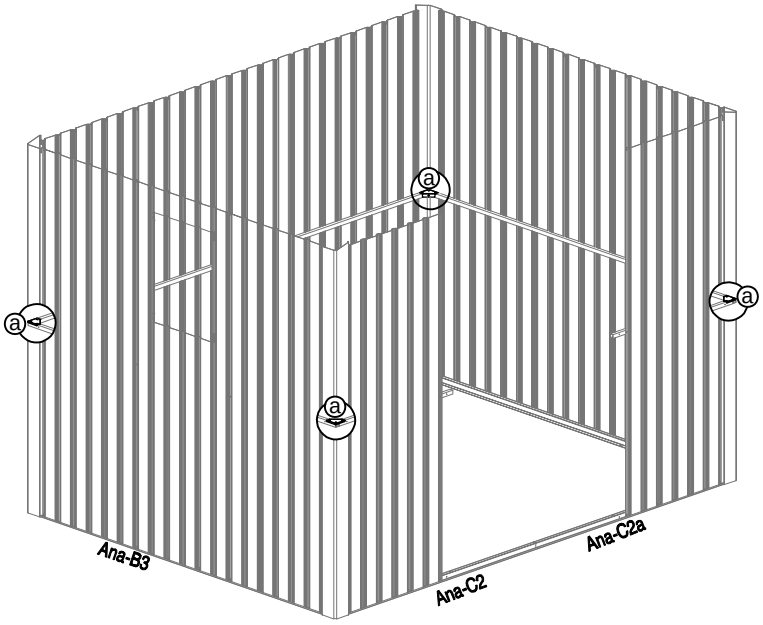

16						
	Anj-B14 x1	Anj-C13 x1	Anj-C13a x1	Anj-C41 x20	Anj-C40 x16	

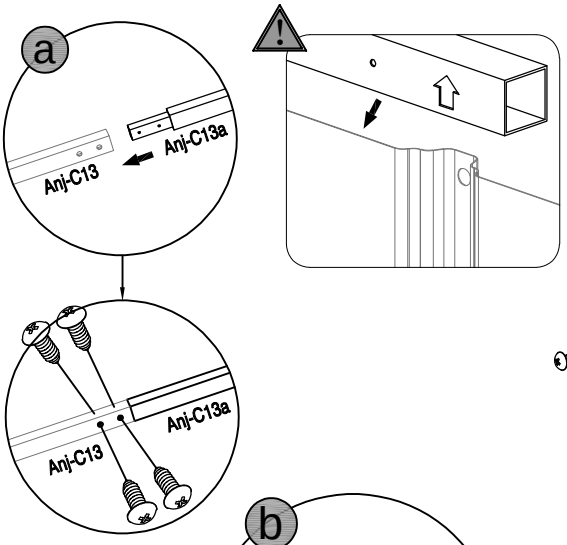

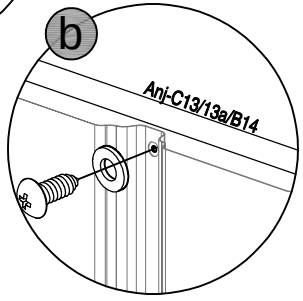

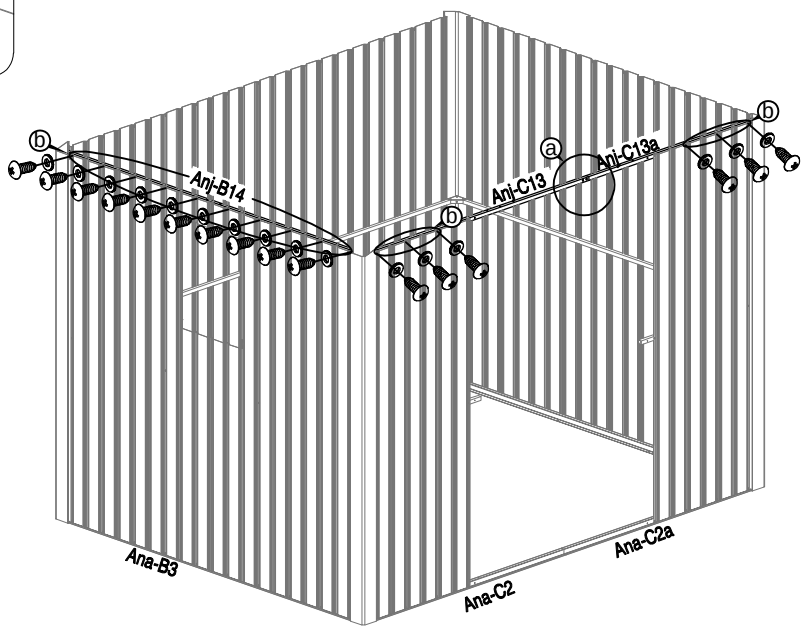

17					
Anj-B14 x1	Anj-C12 x1	Anj-C12a x1	Anj-C41 x27	Anj-C40 x23	

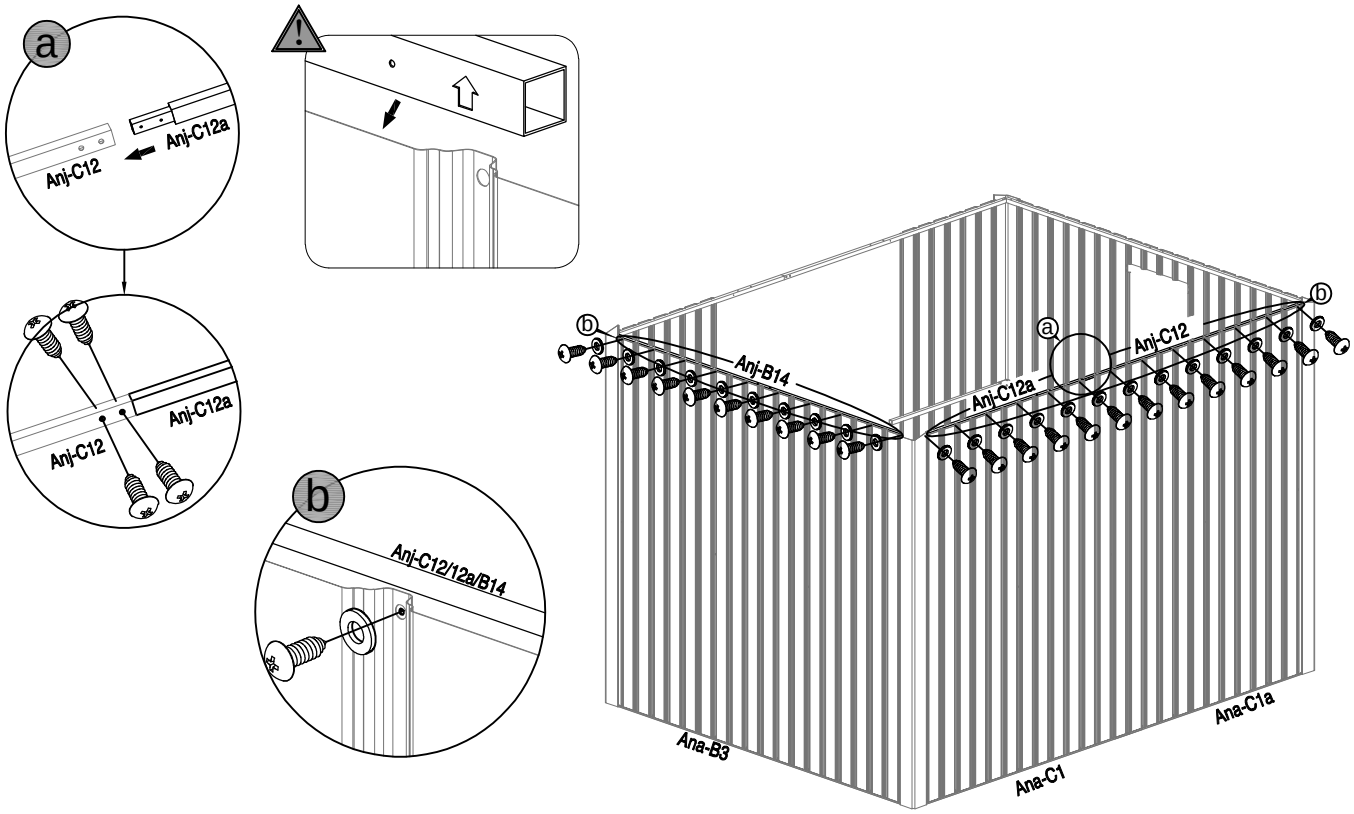

18		
Ab-4 x4	Anj-C41 x12	

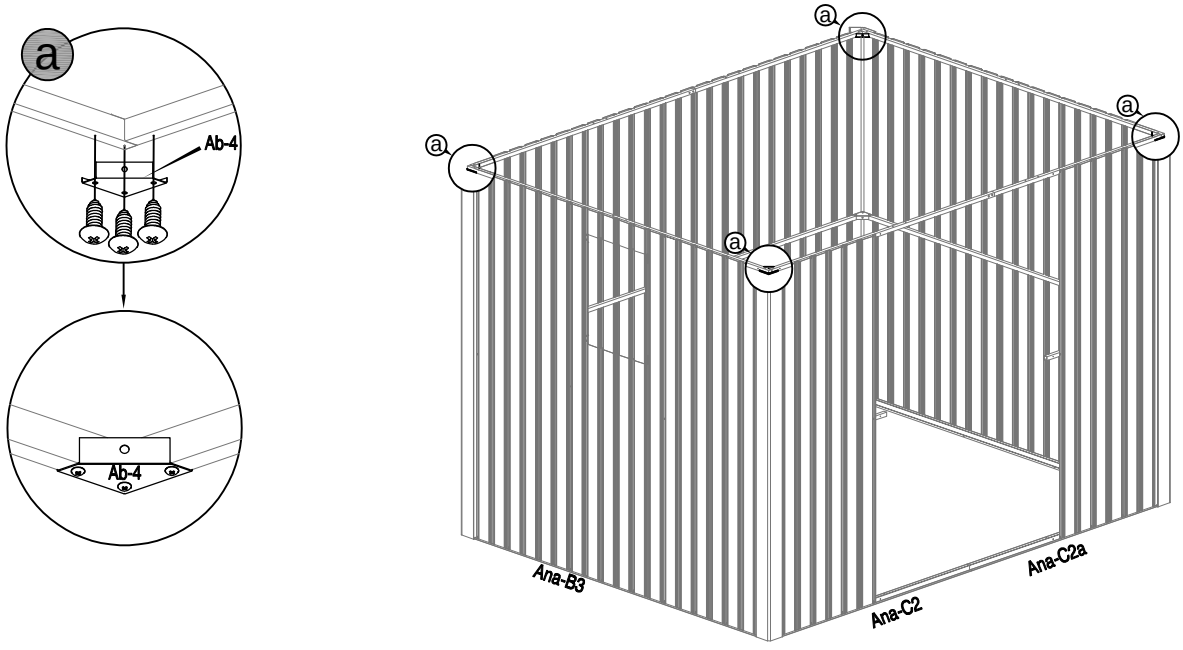

19	Ana-A4 x1	Anj-C41 x6	

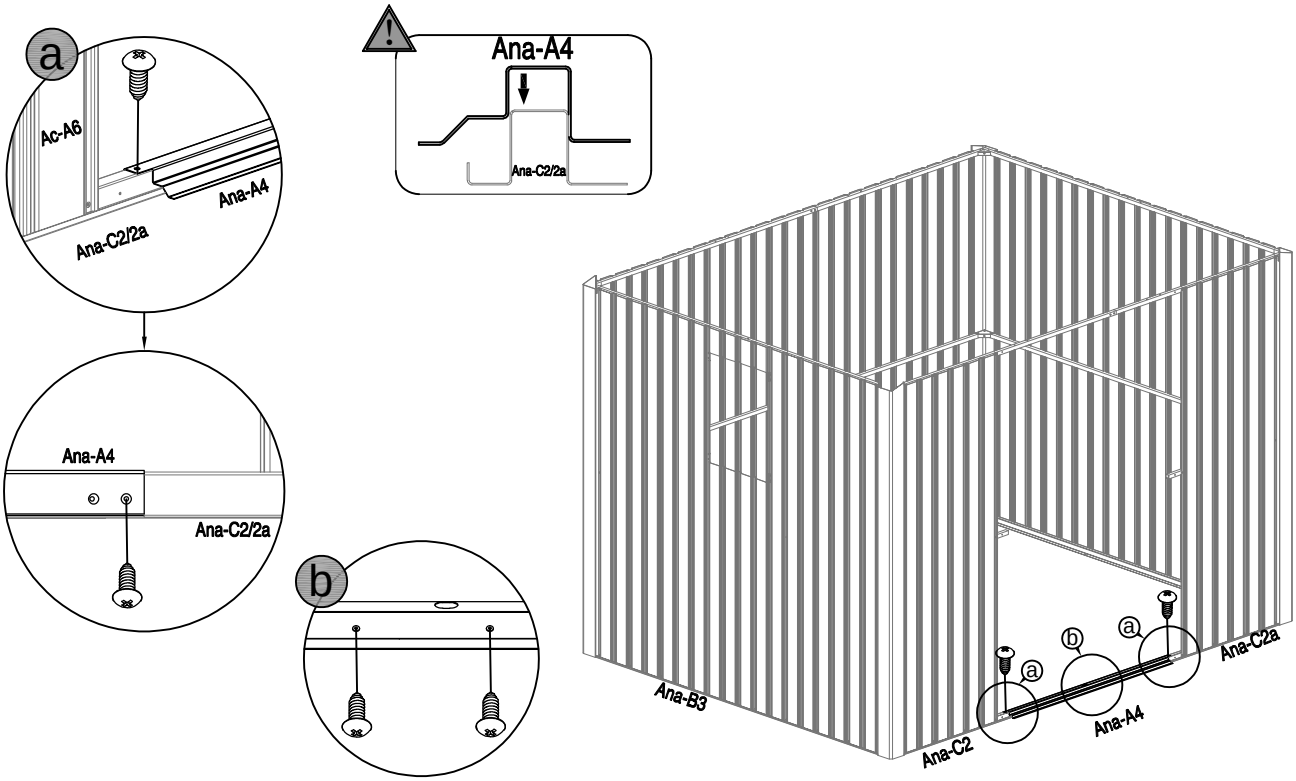

20	Ana-A15 x1	Ana-A15a x1	Anj-C41 x6	

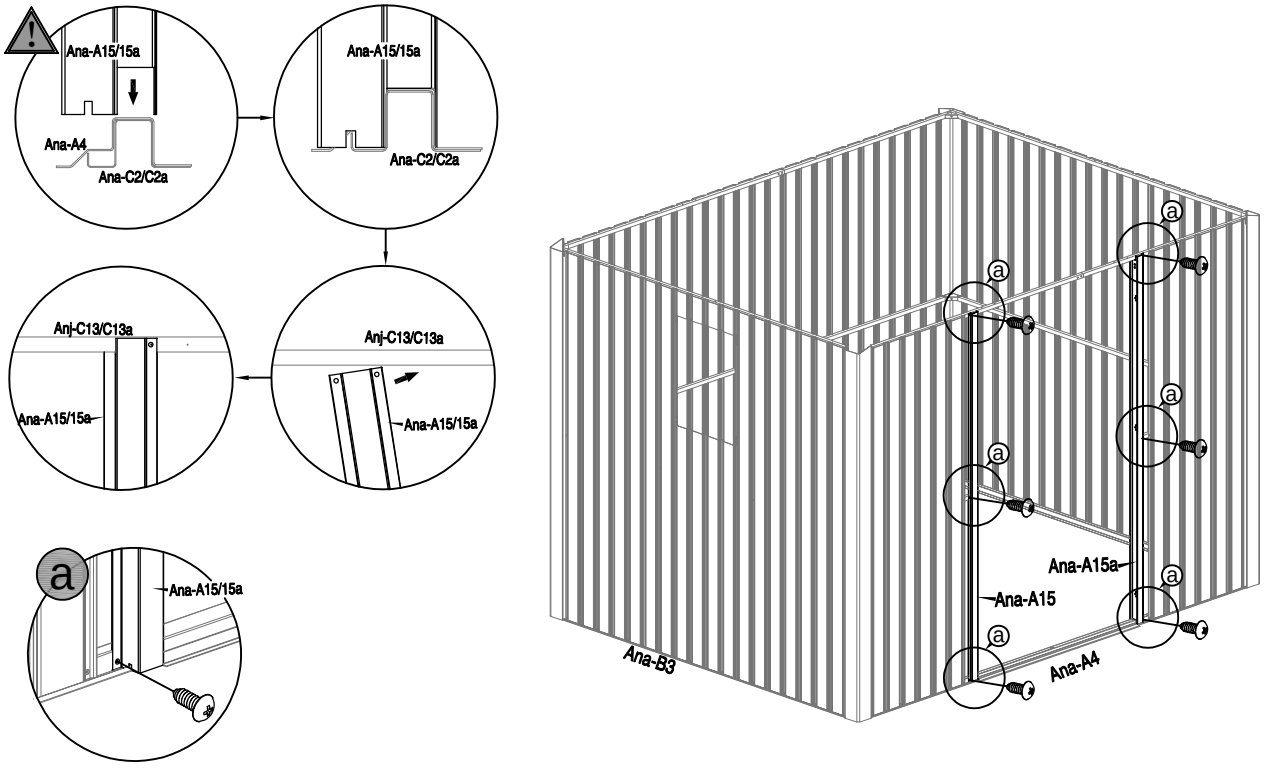

21					
	Ana-A16 x1	Ana-A16a x1	Anj-C41 x10	Anj-C40 x6	

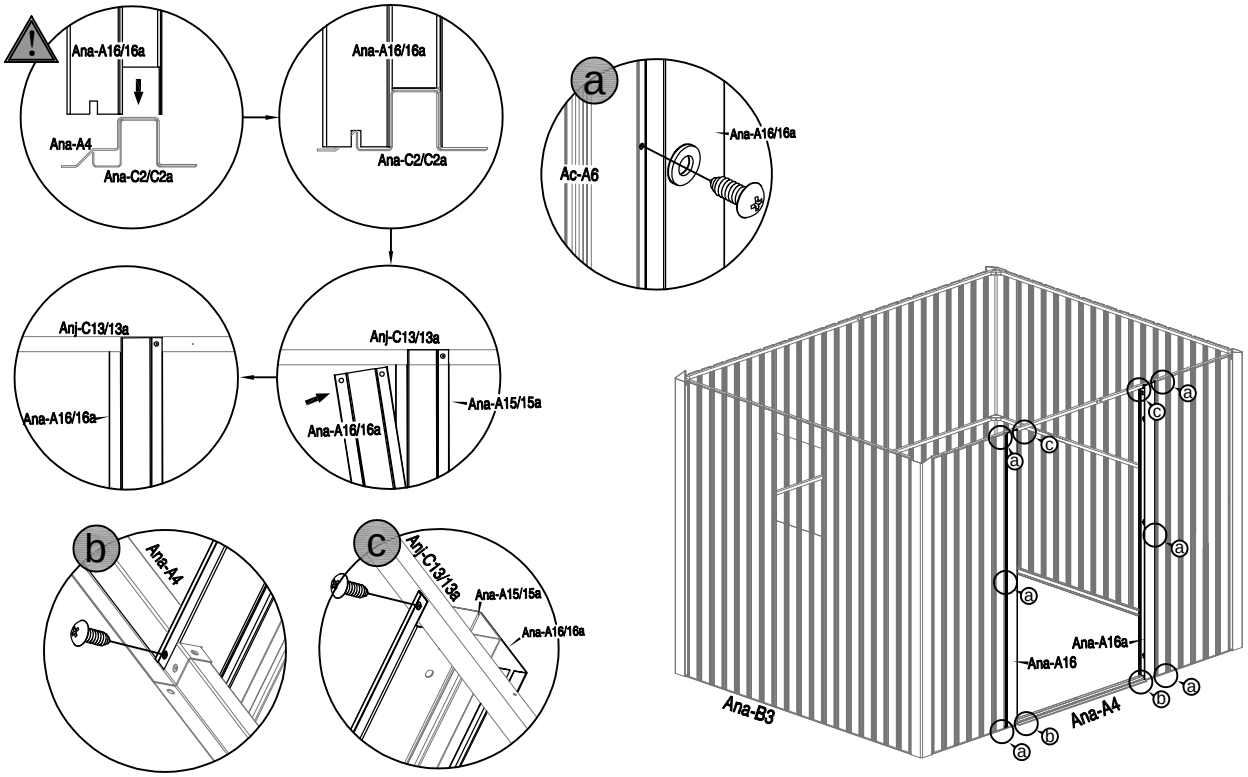

22			
	Ana-A17 x1	Anj-A44 x4	

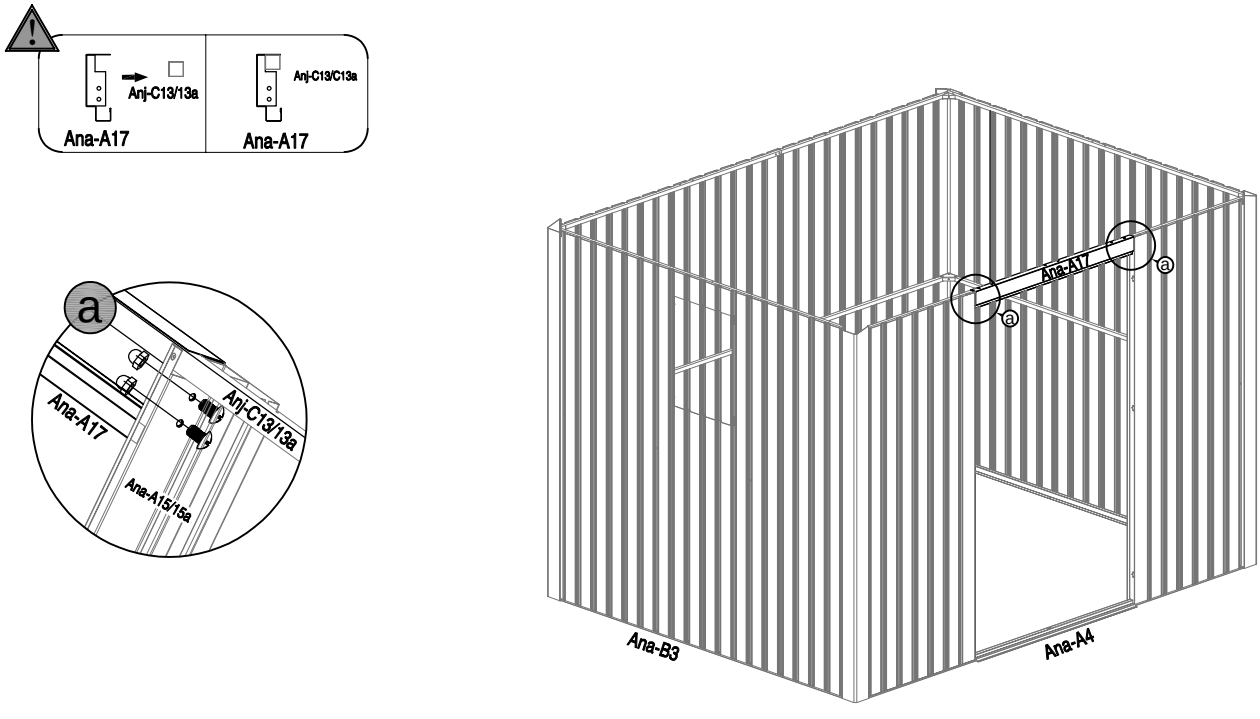

23



Anj-C18 x2



Anj-C18a x2

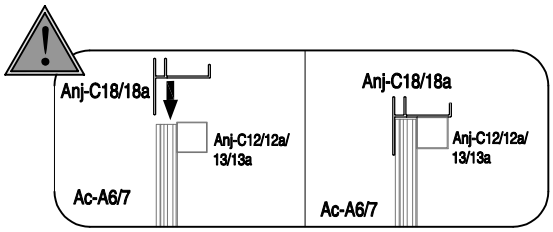

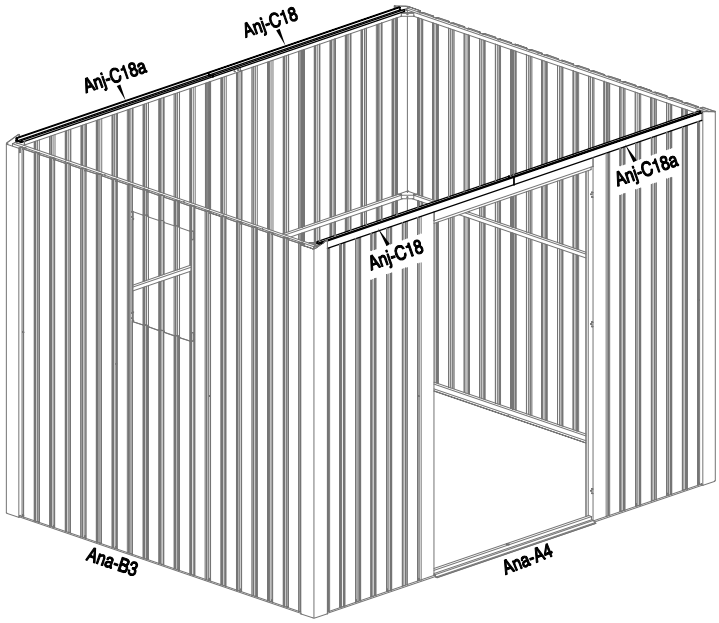

24



Ac-A18 x2



Anj-C41 x16

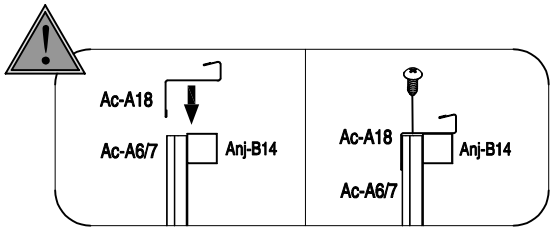

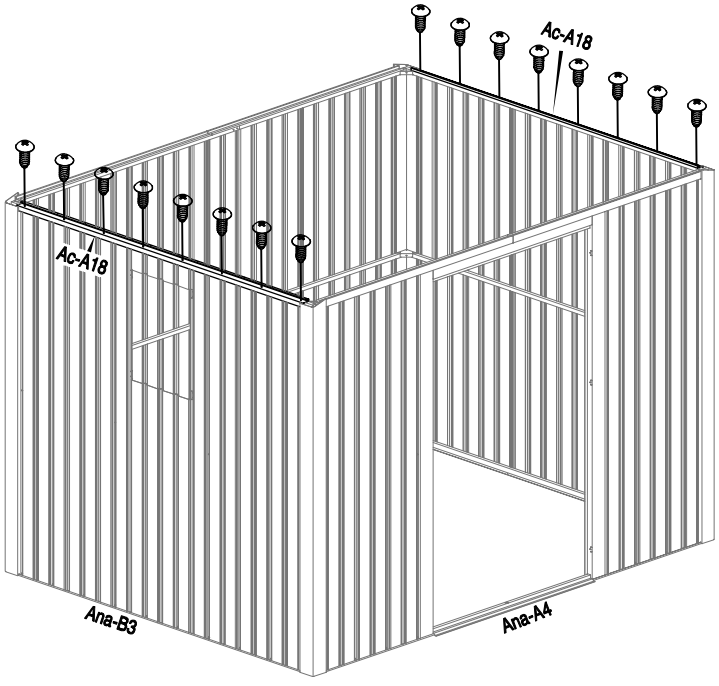

25				
	Anj-C22 x2	Anj-C22a x4	Anj-C41 x16	

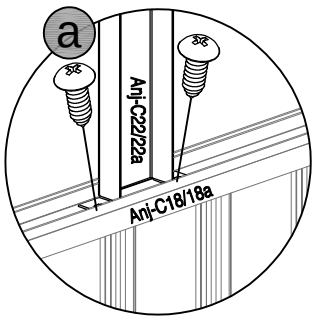

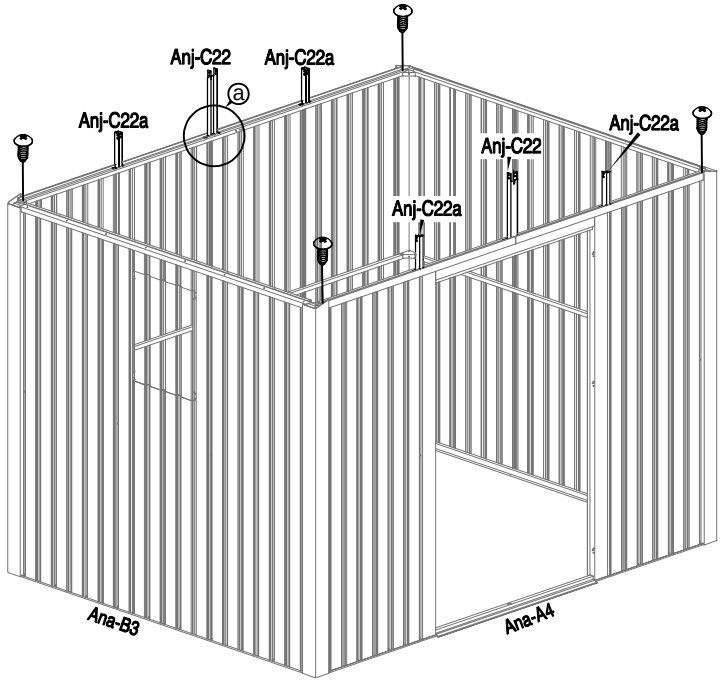

26			
	Anj-C33 x2	Anj-C49 x2	

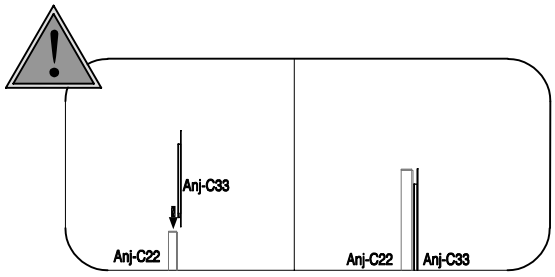

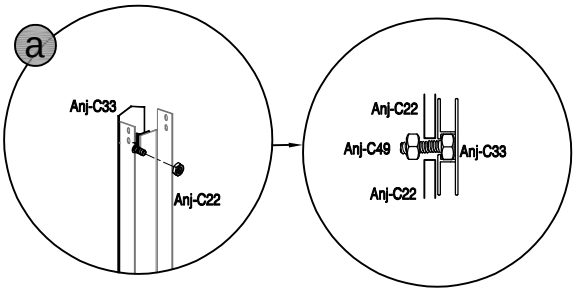

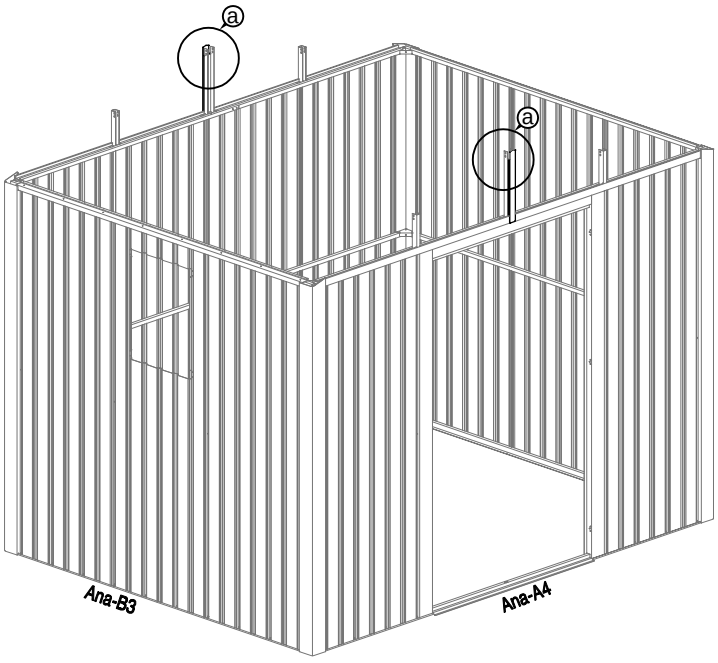

27


Anj-B23 x1


Anj-B23a x2


Anj-C41 x24

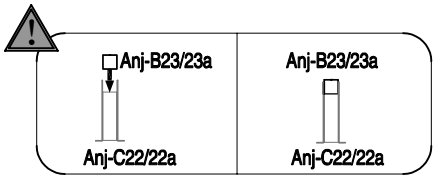

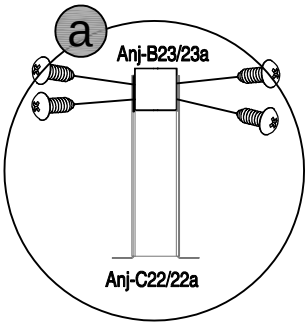

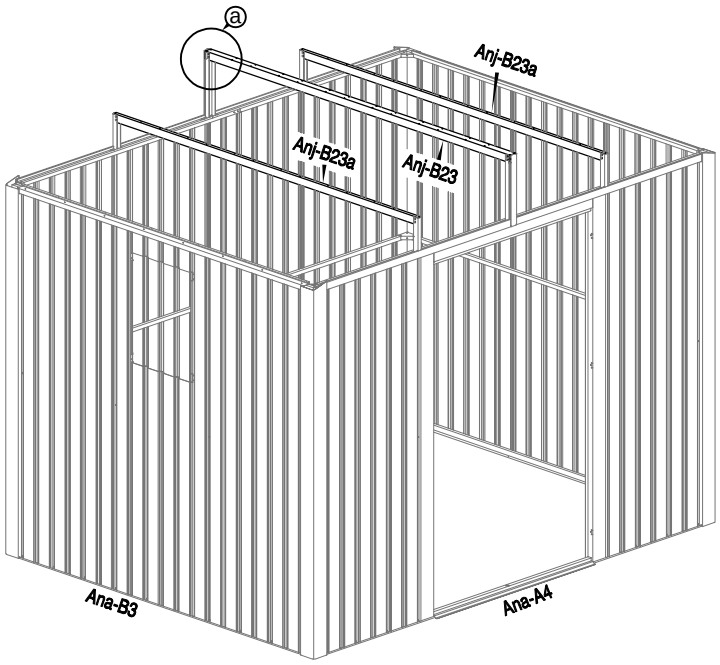

28

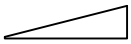
Anj-C21 x2

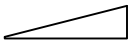
Anj-C21a x2

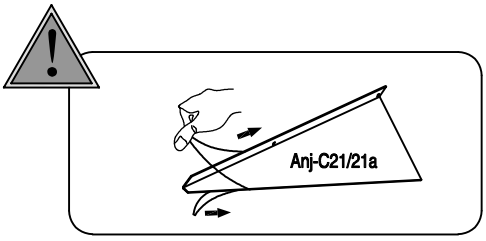

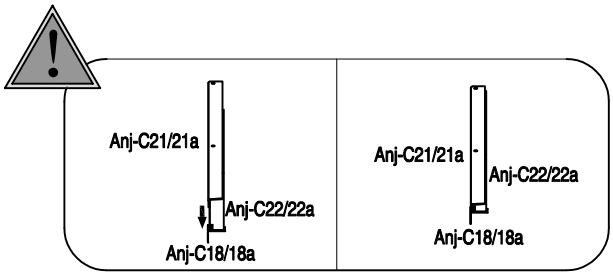

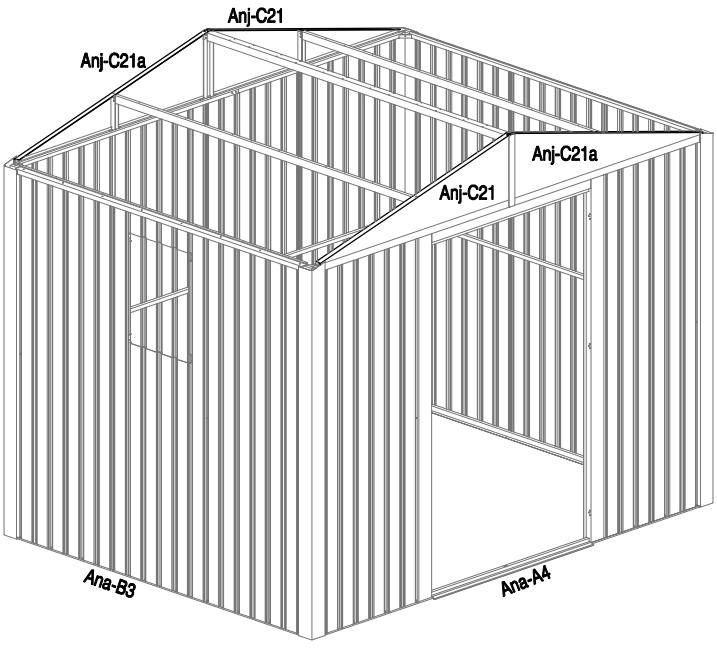

29					
	Anj-C25 x1	Anj-C25a x1	Anj-C41 x22	Anj-C40 x22	

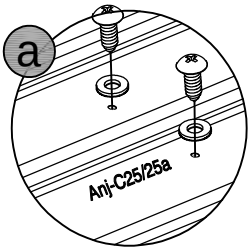

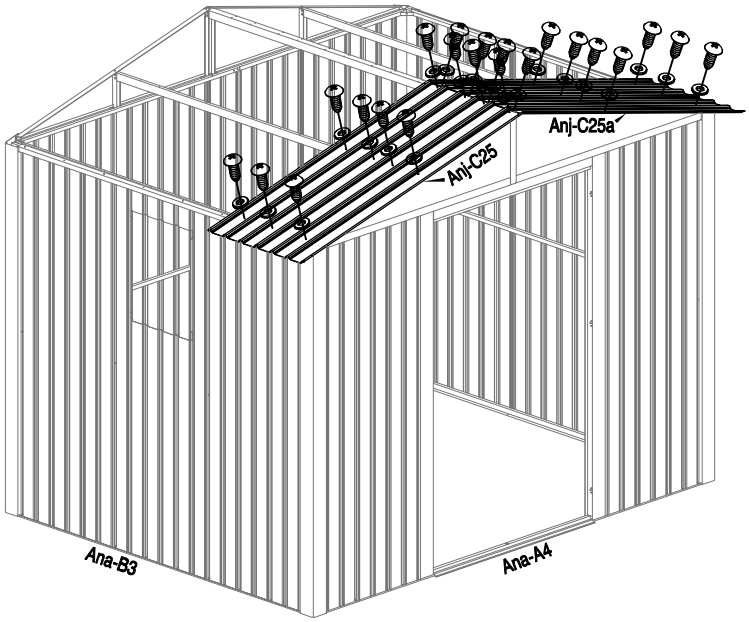

30					
	Anj-C25b x1	Anj-C24 x1	Anj-C41 x20	Anj-C40 x20	

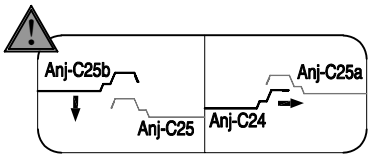

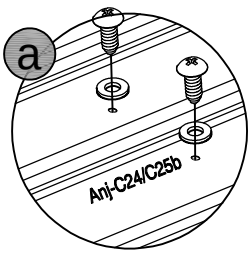

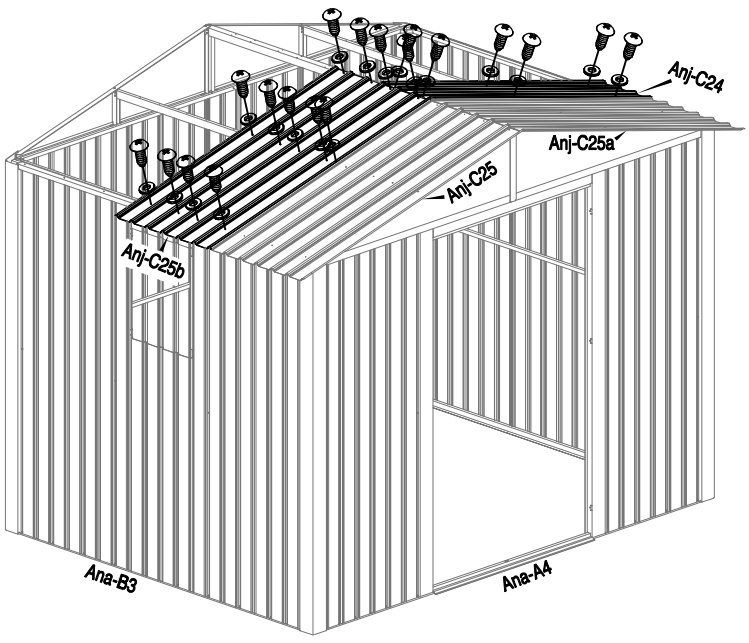

31					
	Anj-C25b x1	Anj-C24 x1	Anj-C41 x20	Anj-C40 x20	

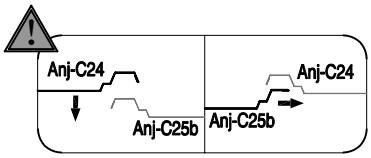

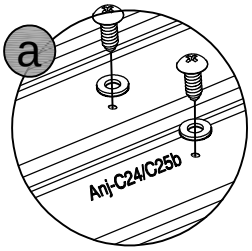

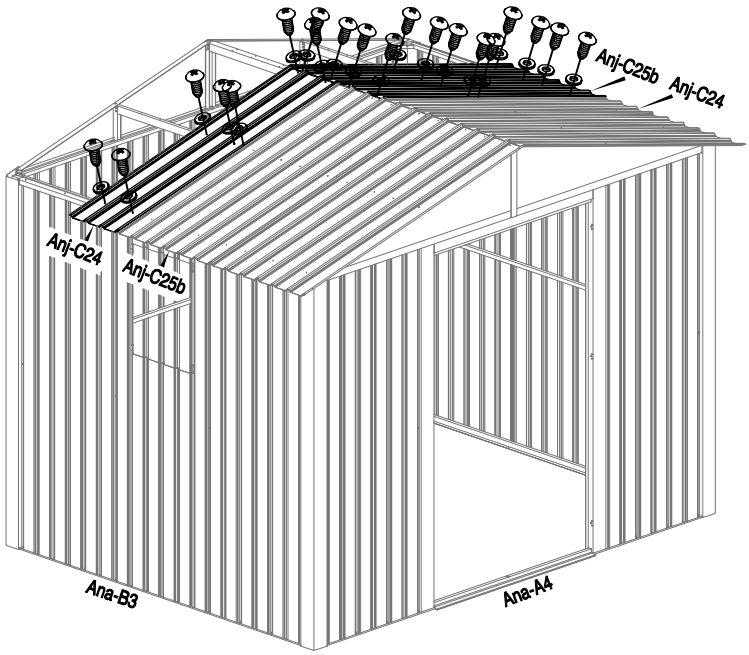

32					
	Anj-C25 x1	Anj-C25a x1	Anj-C41 x24	Anj-C40 x24	

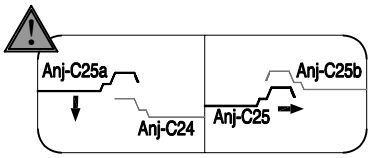

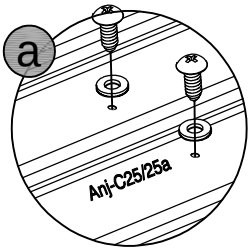

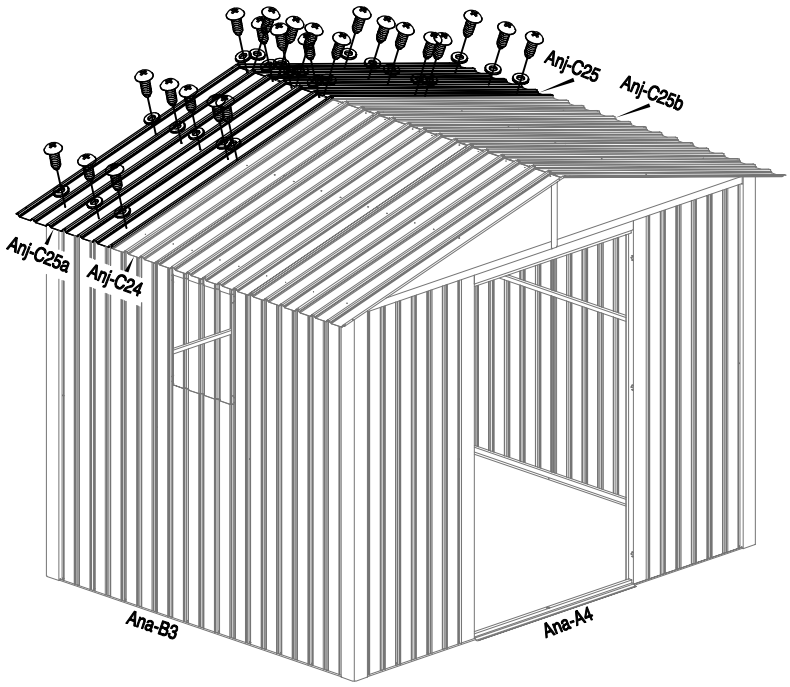

33				
	Anj-B28 x1	Anj-B46 x8	Anj-C40 x8	

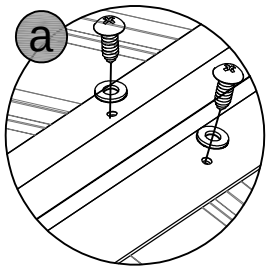

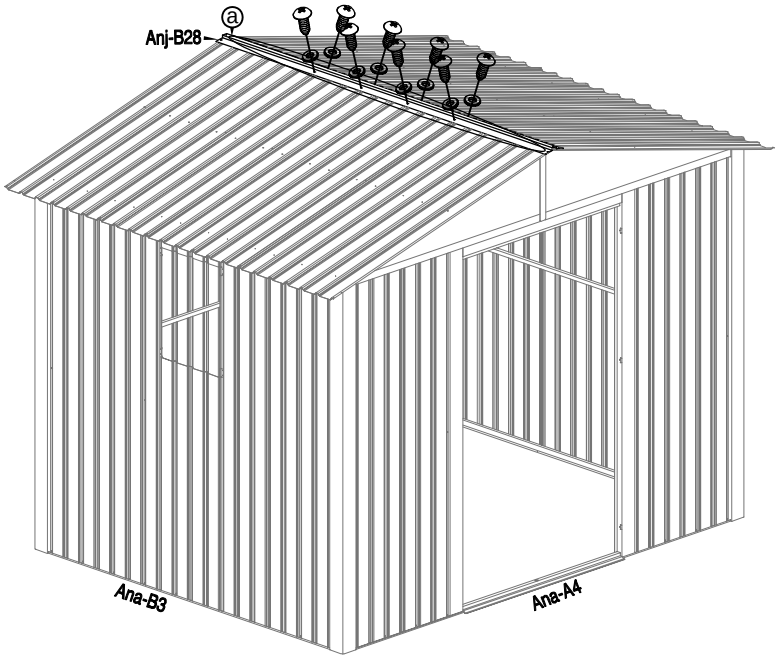

34					
	Ac-D27 x2	Ac-D27a x2	Anj-C41 x4	Anj-C40 x4	

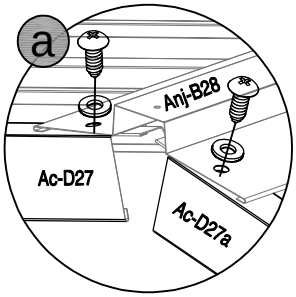

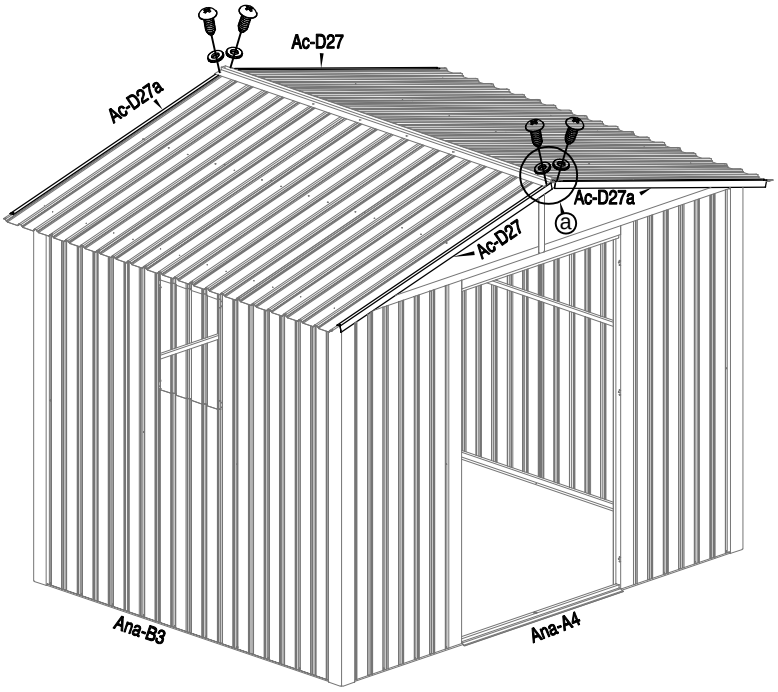

35			
	T-P4 x2	Anj-C41 x2	

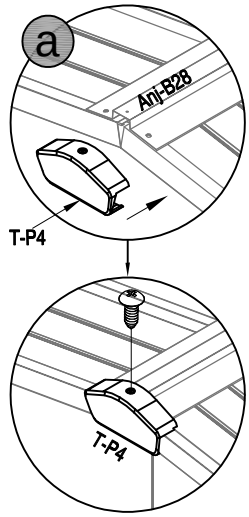

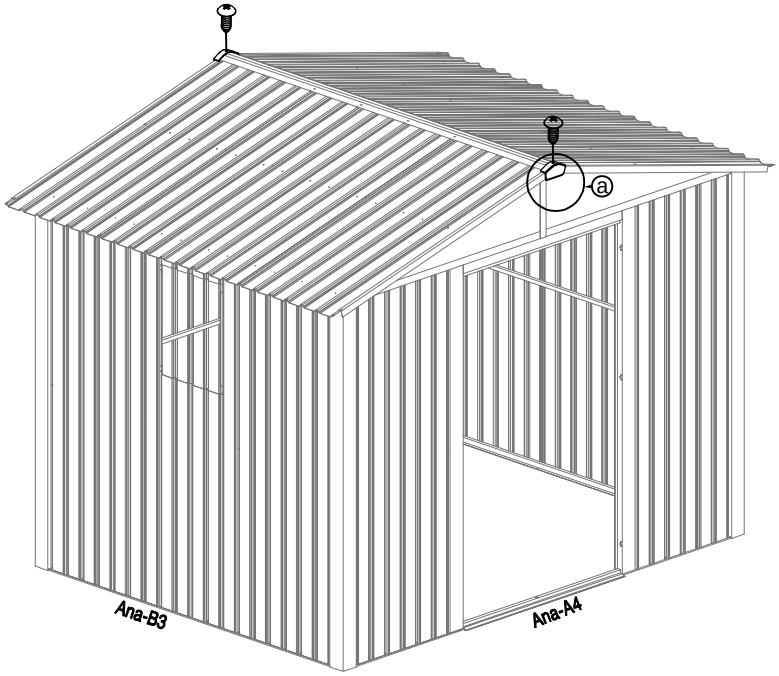

36				
	Ac-A26 x2	Anj-C41 x12	Anj-C40 x12	

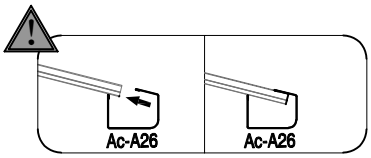

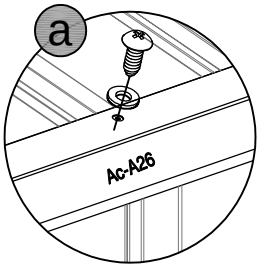

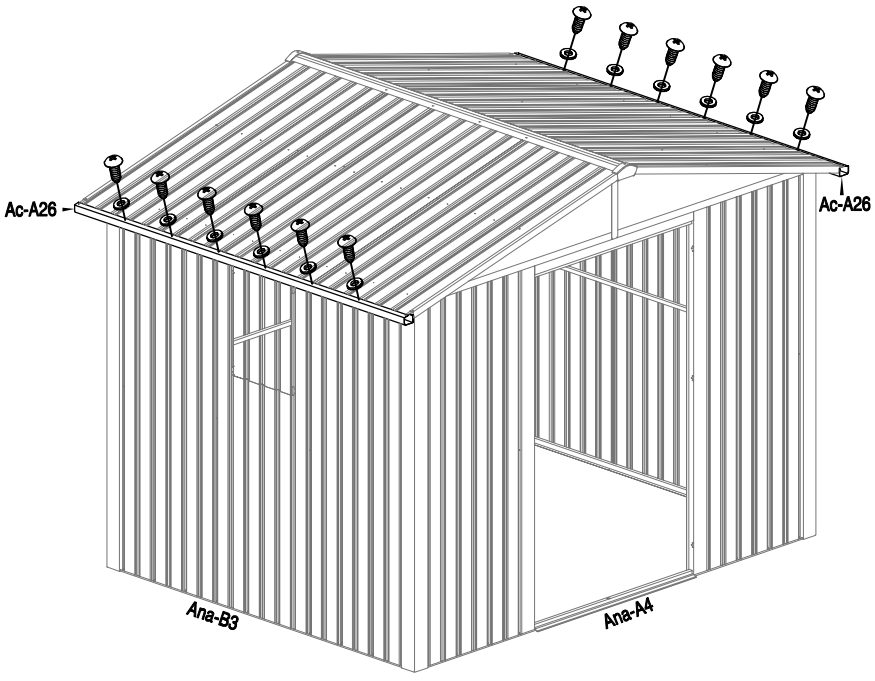

37				
	 Ac-P1 x2	 Ac-P2 x2	 Anj-C41 x8	

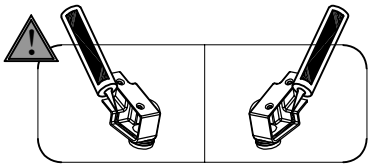

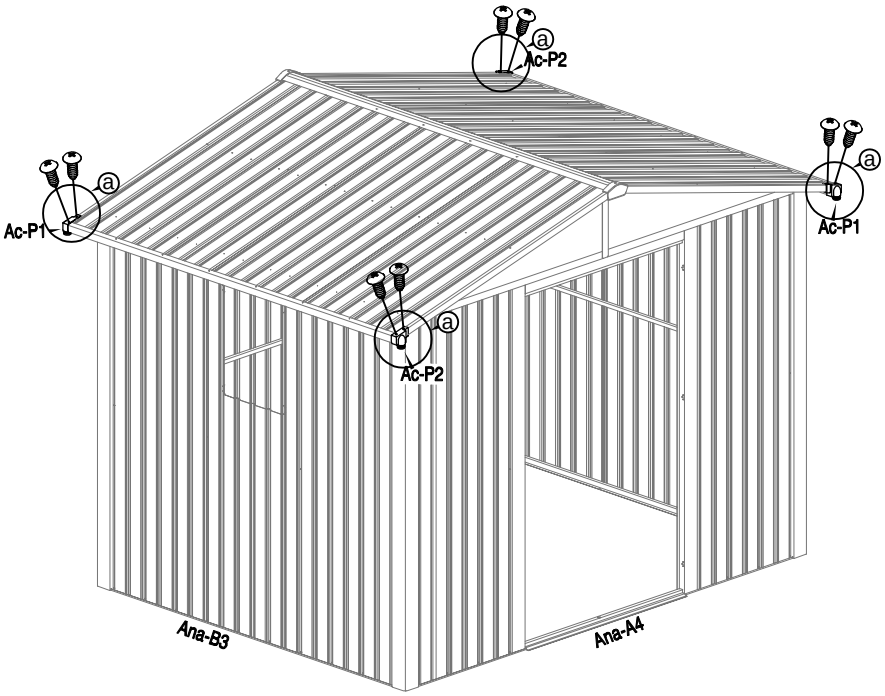

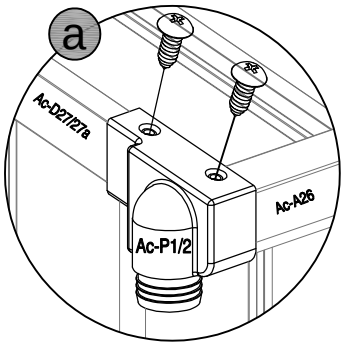

38			
	 Ab-50 x6	 Anj-A43 x18	

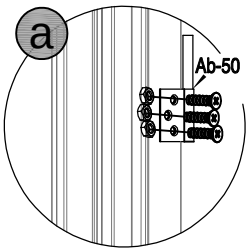

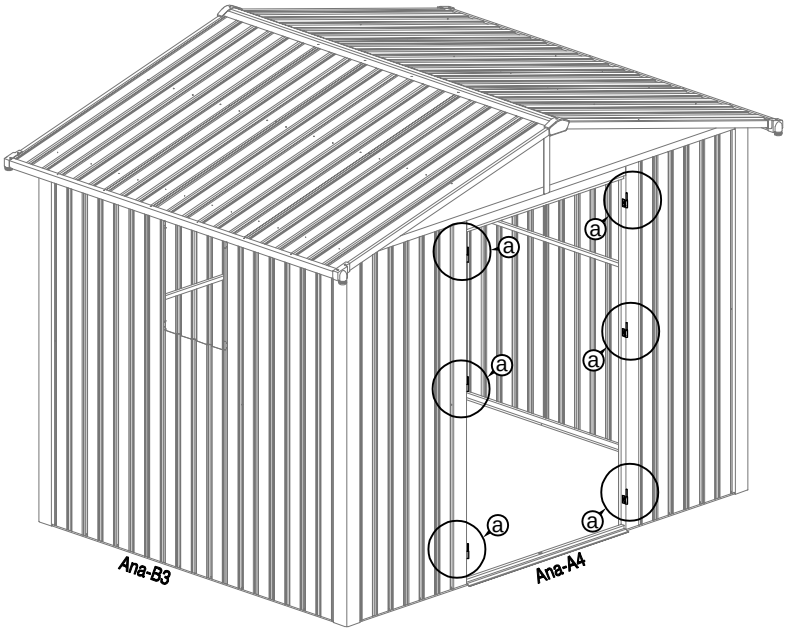

39							
Ac-A29 x1	Ac-A29a x1	Ana-54 x1	Ana-55 x1	Ana-56 x1	Ana-57 x1	Ana-58 x3	

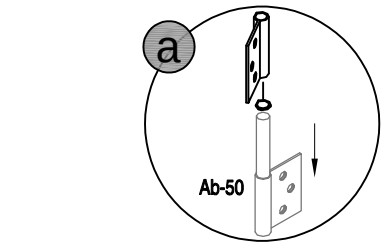

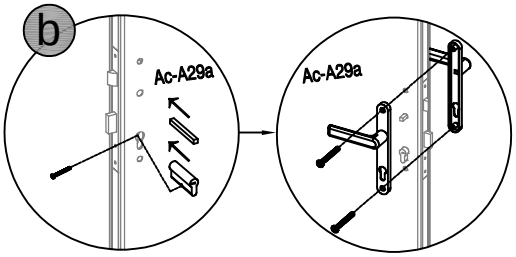

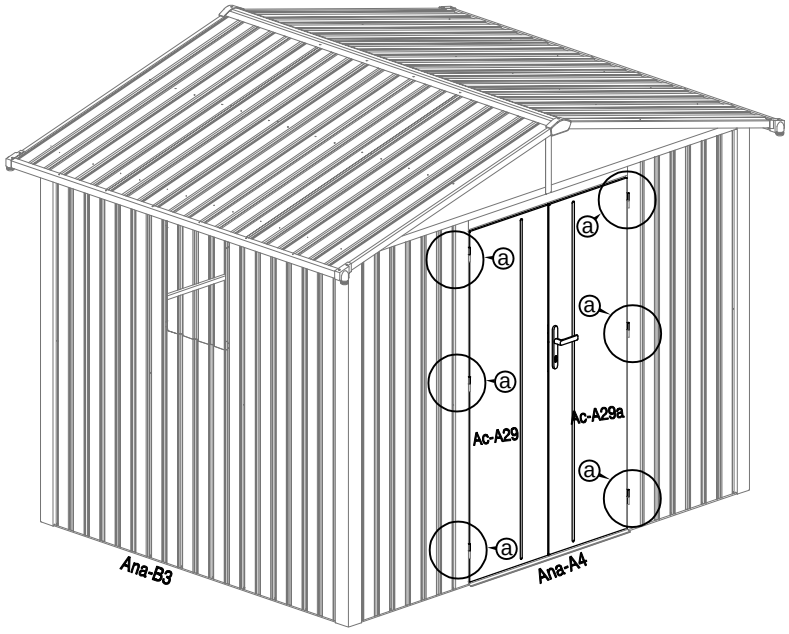

40		
Ana-P6 x1	Anj-C41 x4	

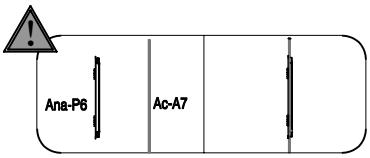

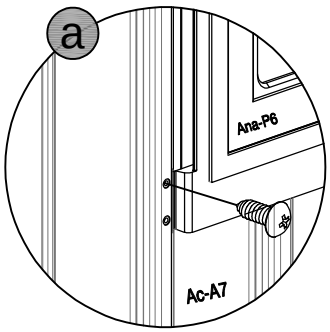

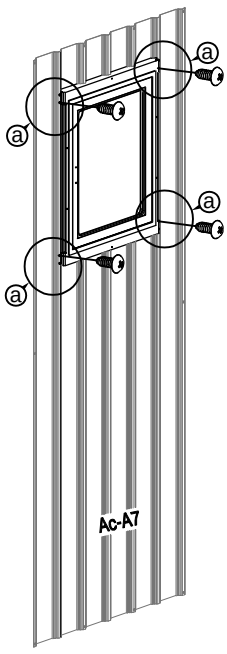

41



Ana-P7 x1



Anj-C41 x10

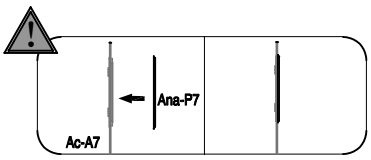

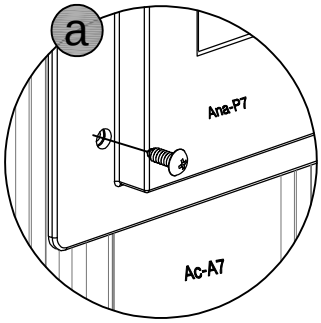

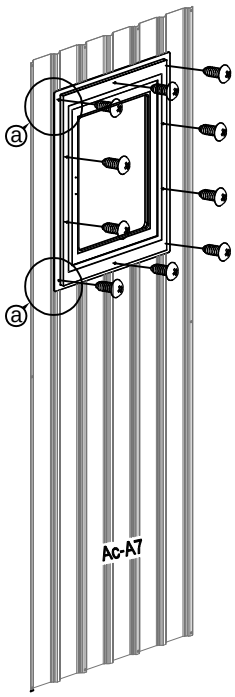

42



Ana-P8 x1



Ana-A42 x2

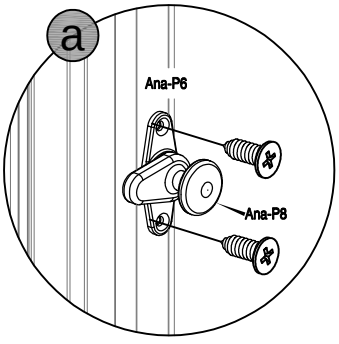

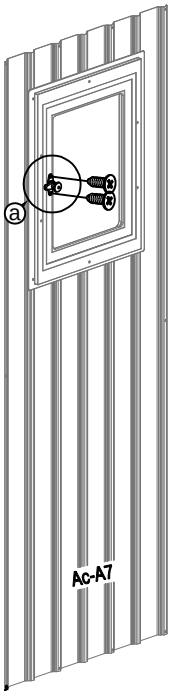

43



Anj-C37 x5.2M

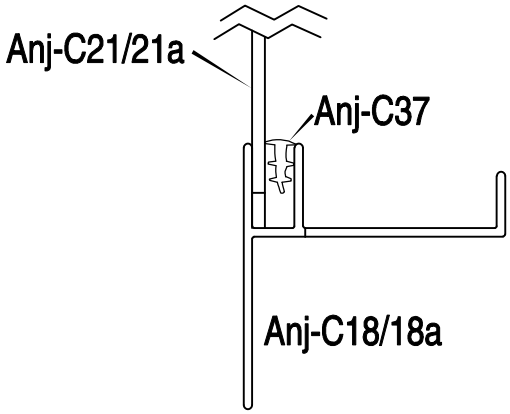

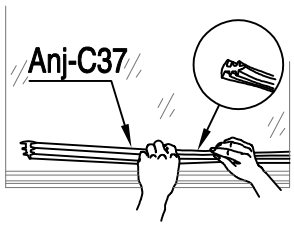

44

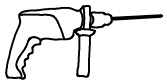

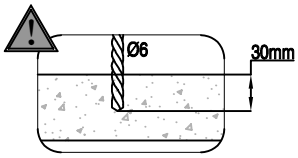

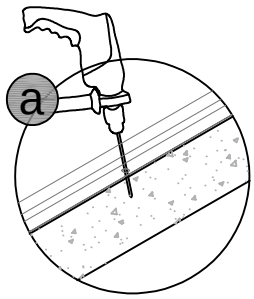

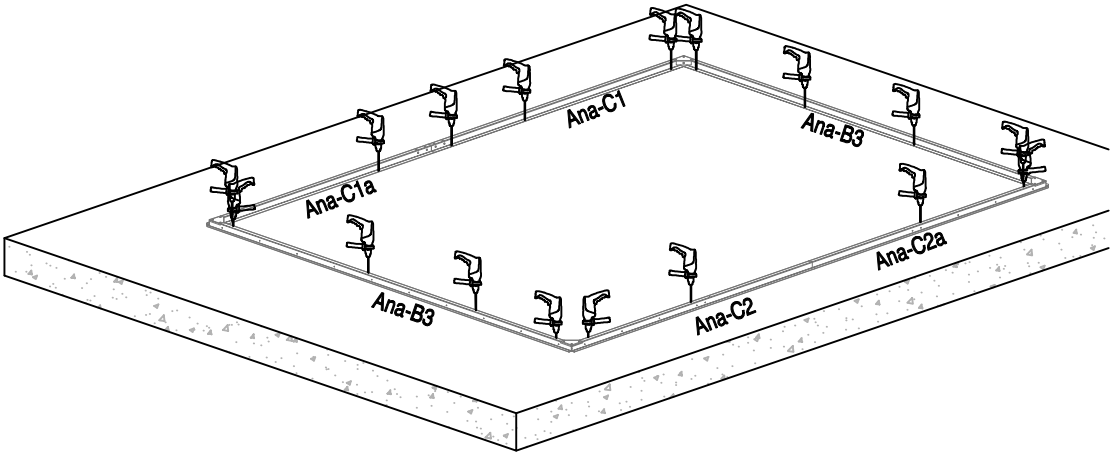

45



Anj-C45 [x17]

