Anna-A

OWNER'S MANUAL /
Instructions for Assembly

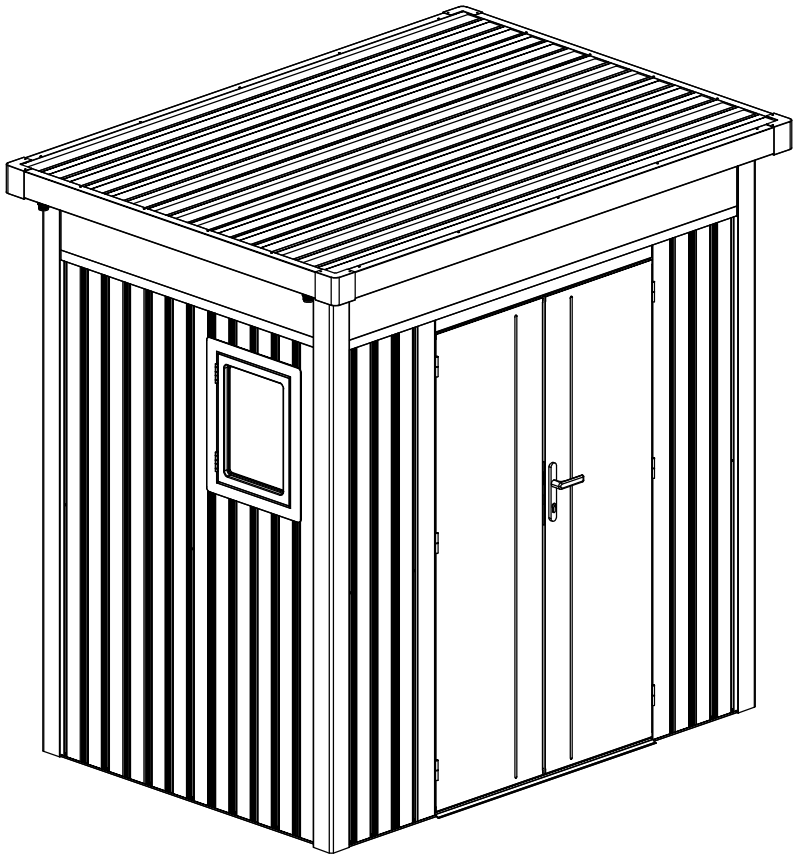



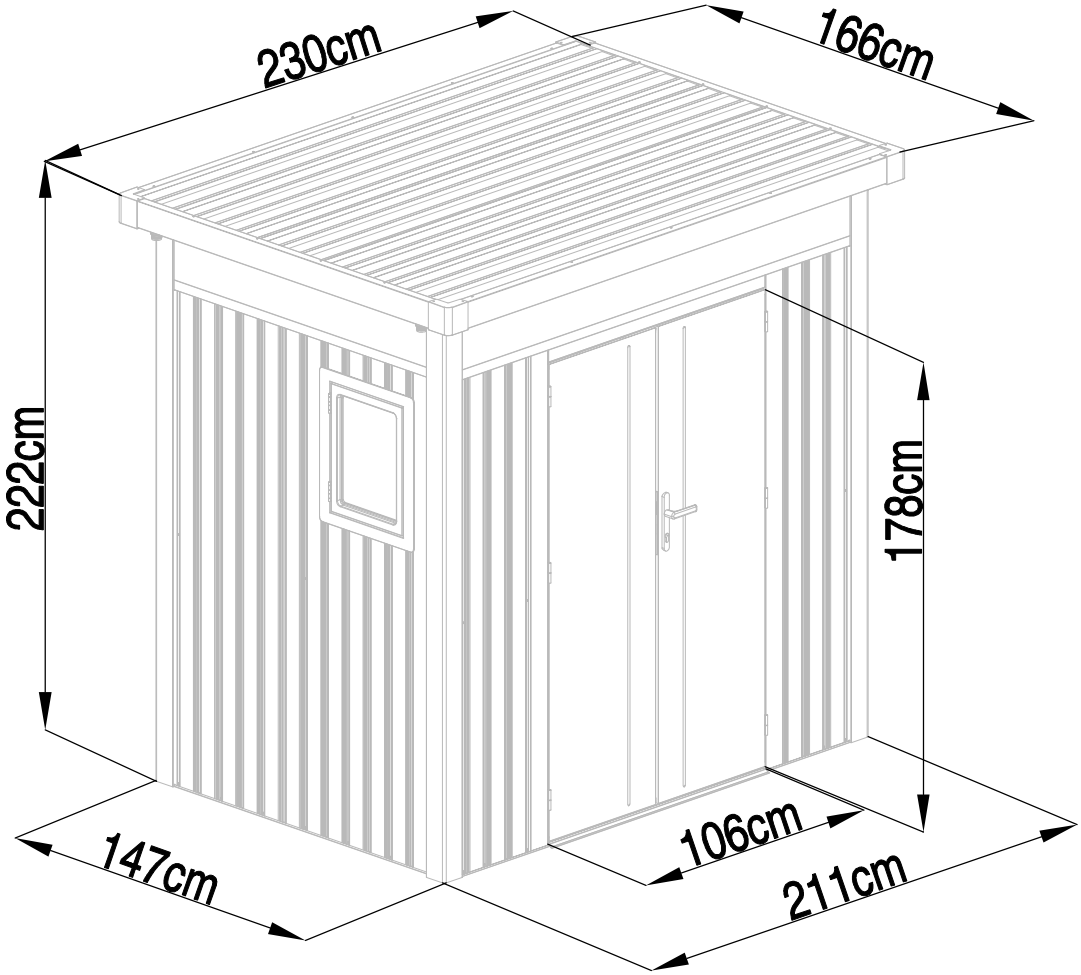

Area of installation requirement:

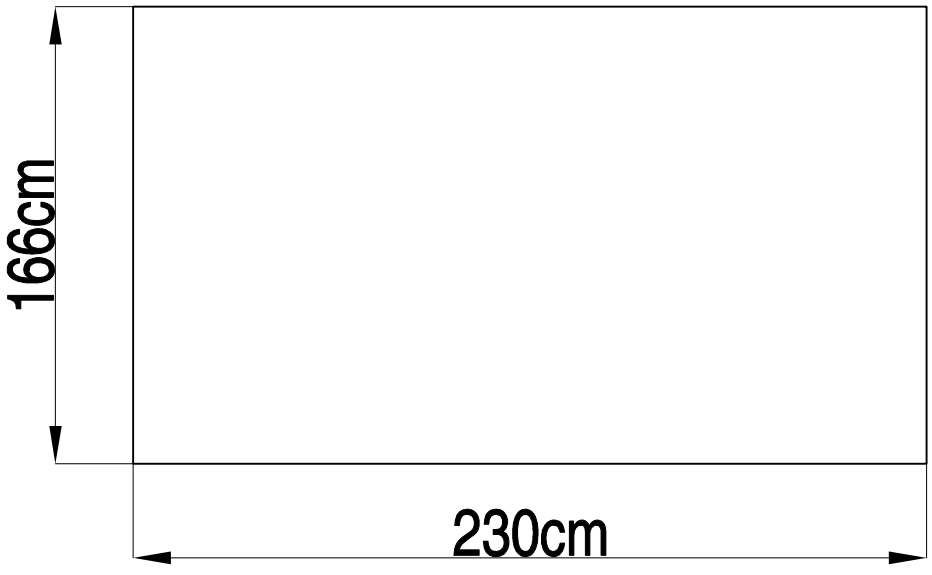

Anna-A:

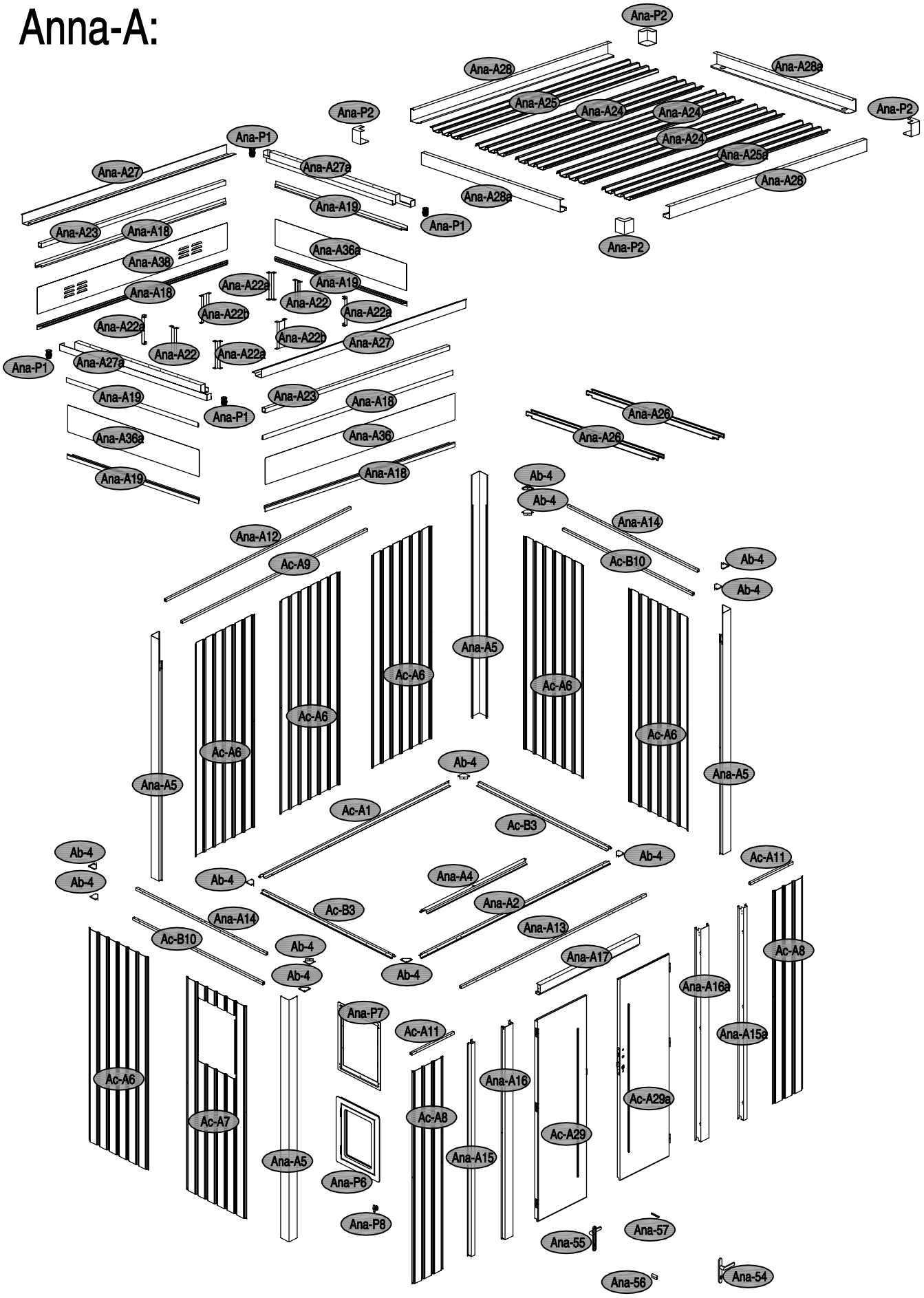
Ana-P2
Ana-A28
Ana-A28a
Ana-A25
Ana-A24
Ana-A24
Ana-A24
Ana-A25a
Ana-A28
Ana-P2
Ana-P2
Ana-P1
Ana-A27
Ana-A27a
Ana-A19
Ana-A28a
Ana-P1
Ana-P2
Ana-A23
Ana-A18
Ana-A36a
Ana-A38
Ana-A18
Ana-A22a
Ana-A19
Ana-A22
Ana-A22b
Ana-A22
Ana-A22a
Ana-A22a
Ana-A22b
Ana-A27
Ana-A22
Ana-A22a
Ana-P1
Ana-A27a
Ana-A19
Ana-A23
Ana-A18
Ana-P1
Ana-A26
Ana-A26
Ana-A36a
Ana-A36
Ana-A19
Ana-A18
Ab-4
Ab-4
Ana-A14
Ana-A12
Ac-A9
Ac-B10
Ab-4
Ab-4
Ana-A5
Ac-A6
Ac-A6
Ac-A6
Ac-A6
Ac-A6
Ana-A5
Ab-4
Ac-A1
Ac-B3
Ab-4
Ab-4
Ab-4
Ana-A4
Ac-A11
Ab-4
Ana-A2
Ac-B3
Ana-A14
Ana-A13
Ac-B10
Ana-A17
Ac-A8
Ab-4
Ab-4
Ab-4
Ana-A16a
Ana-P7
Ac-A11
Ana-A15a
Ac-A6
Ana-A16
Ac-A29a
Ac-A8
Ac-A7
Ac-A29
Ana-A5
Ana-A15
Ana-P6
Ana-P8
Ana-55
Ana-57
Ana-56
Ana-54

NO.	IMAGE	mm	QTY
UNDER			
Ac-A1	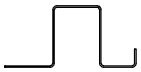	2064	x1
Ana-A2		2064	x1
Ac-B3		1425	x2
Ana-A4		1130	x1
MIDDLE			
Ana-A5		2124	x4
Ac-A6		1900	x6
Ac-A7		1900	x1
Ac-A8		1900	x2
Ac-A9	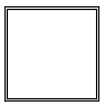	2024	x1
Ac-B10		1424	x2
Ac-A11		464	x2
Ana-A12		2024	x1
Ana-A13		2024	x1
Ana-A14		1424	x2
Ana-A15		1900	x1
Ana-A15a		1900	x1
Ana-A16	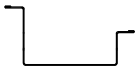	1900	x1
Ana-A16a		1900	x1
Ana-A17		1087.5	x1
Ana-A18		2077	x4
Ana-A19		1438	x4
Ana-A22		223	x2
Ana-A22b	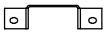	223	x2
Ana-A22a		223	x4
Ana-A23		2017	x2
Ana-A36	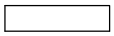	2077	x1
Ana-A36a		1438	x2
Ana-A38	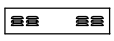	2077	x1
Ana-A26		1503.5	x2
Ana-A27		2236	x2
Ana-A27a		1609	x2
DOOR			
Ac-A29		1804	x1
Ac-A29a		1804	x1

NO.	IMAGE	mm	QTY
TOP			
Ana-A24		2254	x3
Ana-A25		2254	x1
Ana-A25a		2254	x1
Ana-A28		2160	x2
Ana-A28a		1520.5	x2
ANNEX			
Ab-4			x12
Ana-A37			14M
Ana-P1			x4
Ana-P2			x4
Ana-P6			x1
Ana-P7			x1
Ana-P8			x1
Ab-50			x6
Ana-54			x1
Ana-55			x1
Ana-56			x1
Ana-57			x1
Ana-58		M5x45	x3
Ana-A40			x127
Ana-A41		ST4x10	x247
Ana-A42		ST4x10	x2
Ana-A43		M4x10	x18
Ana-A44		M5x8	x4
Ana-A45		ST4x25	x14

1				
	Ac-A1 x1	Ana-A2 x1	Ac-B3 x2	

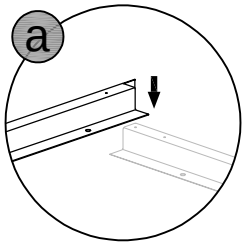

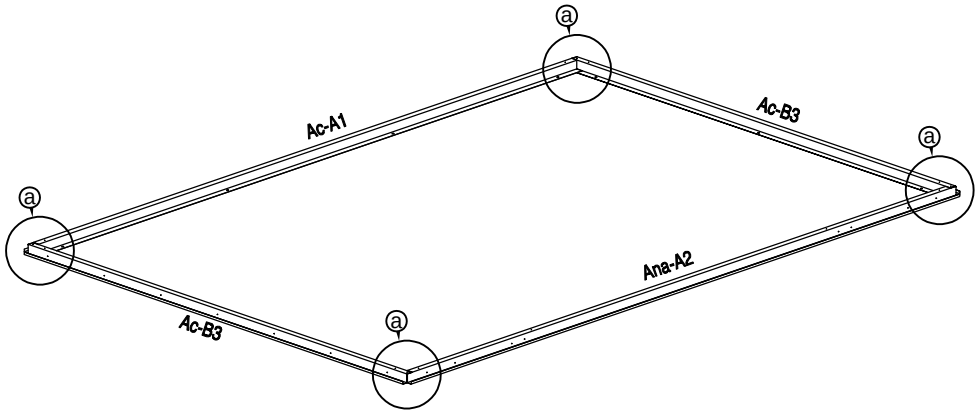

2			
	Ab-4 x4	Ana-A41 x12	

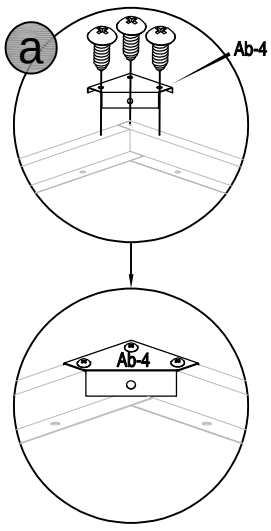

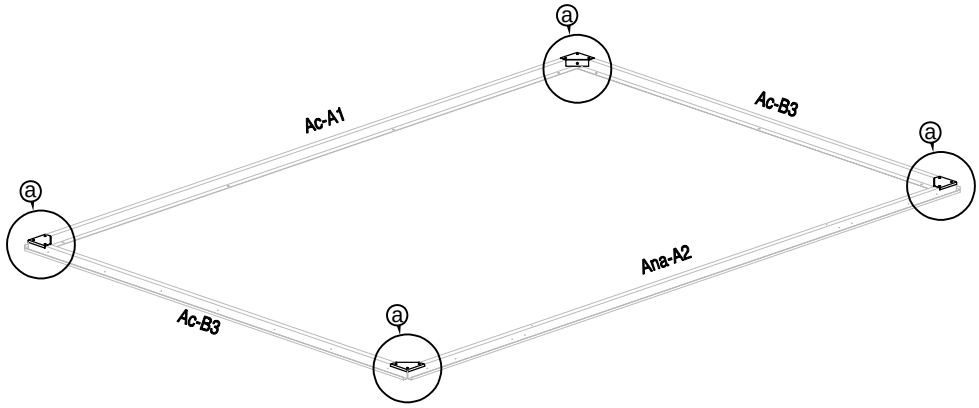

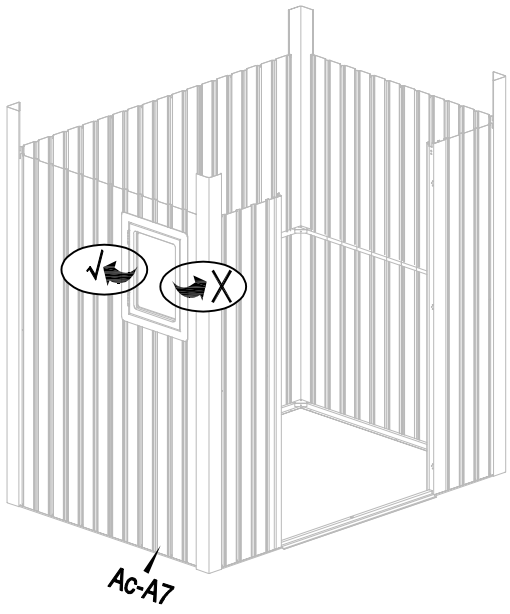

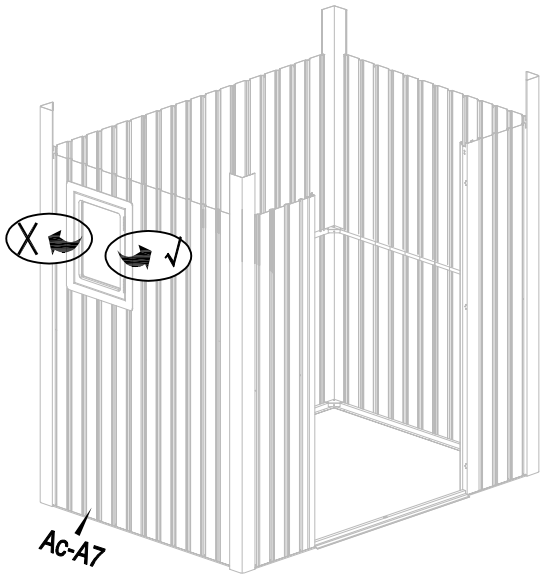

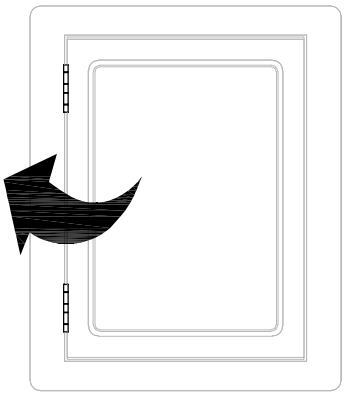

Or

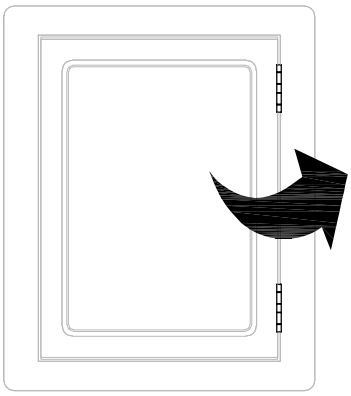

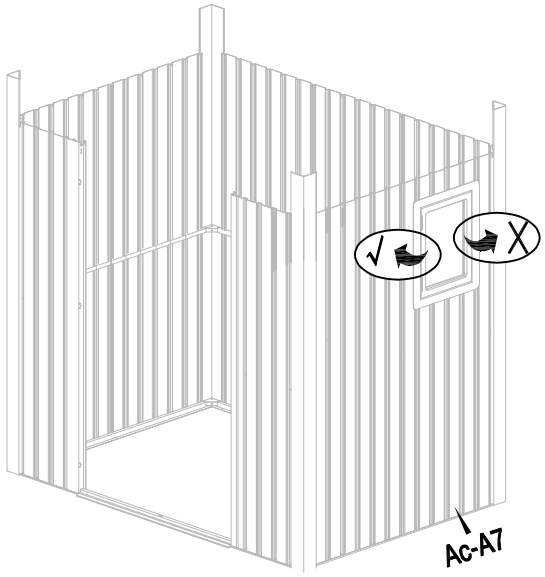

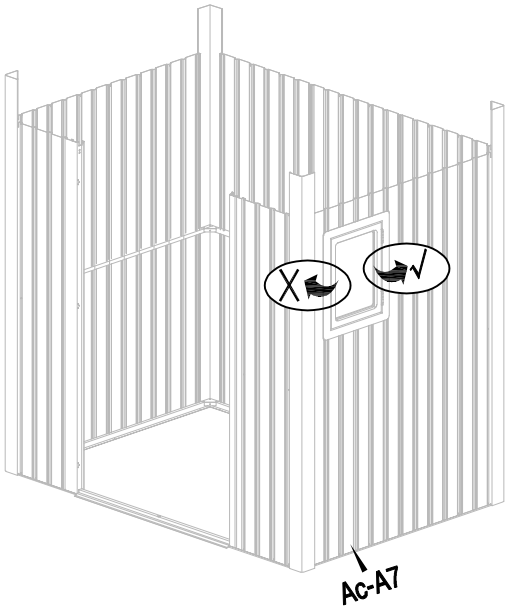

3						
	Ac-A7 x1	Ana-A5 x1	Ac-B10 x1	Ana-A41 x5	Ana-A40 x5	

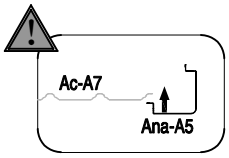

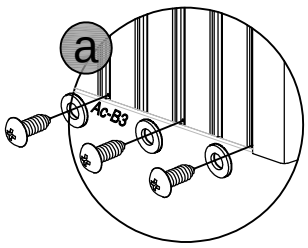

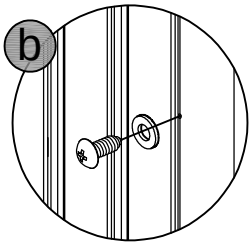

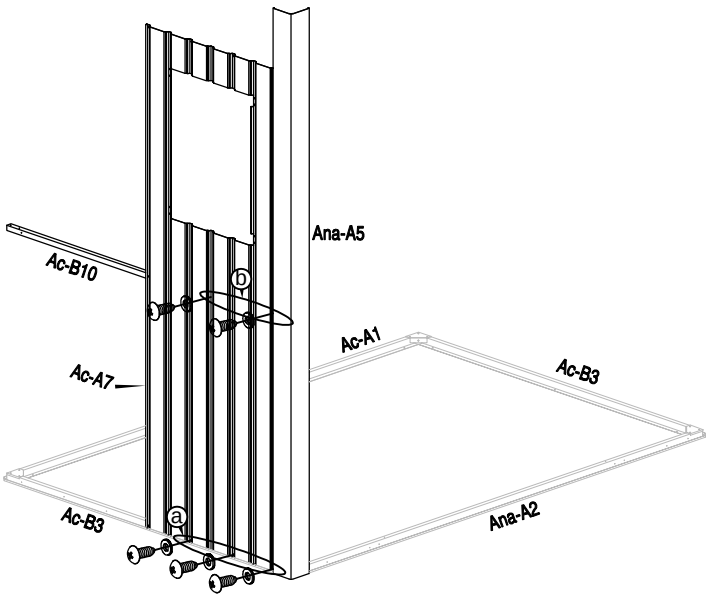

4					
	Ac-A8 x1	Ac-A11 x1	Ana-A41 x3	Ana-A40 x3	

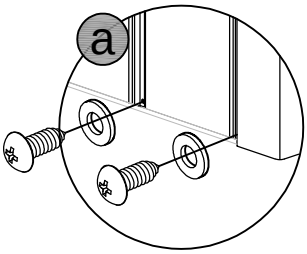

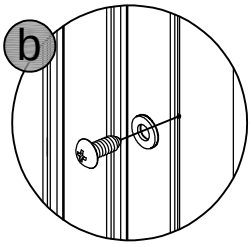

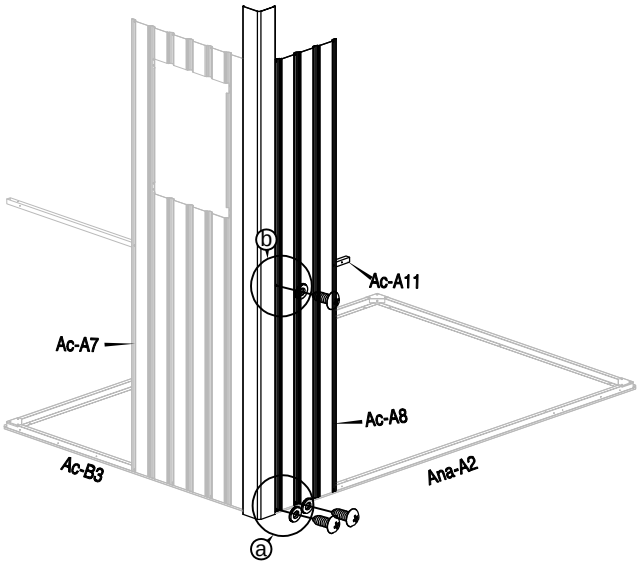

5					
	Ac-A6 x1	Ana-A5 x1	Ana-A41 x7	Ana-A40 x7	

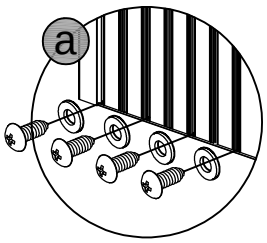

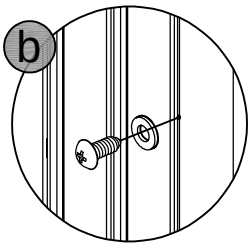

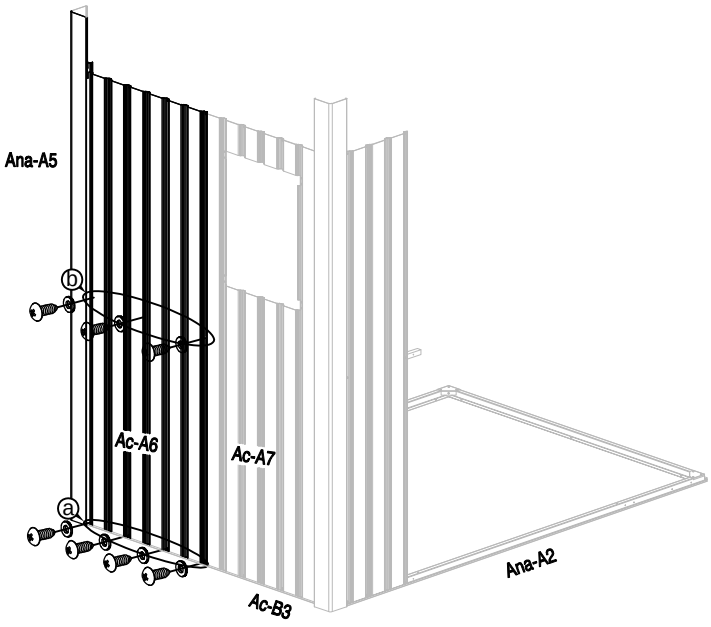

6					
	Ac-A6 x1	Ac-A9 x1	Ana-A41 x5	Ana-A40 x5	

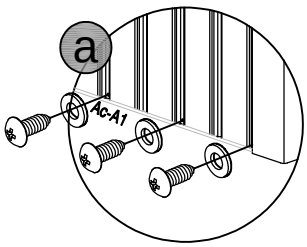

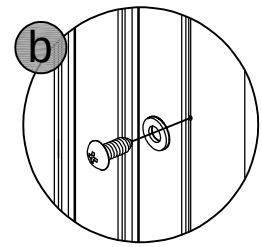

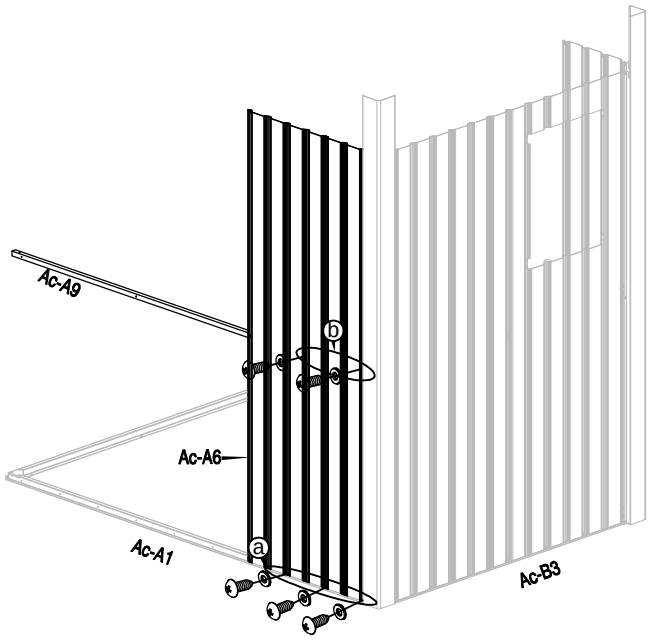

7	Ac-A6 x1	Ana-A41 x5	Ana-A40 x5	

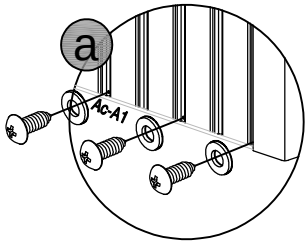

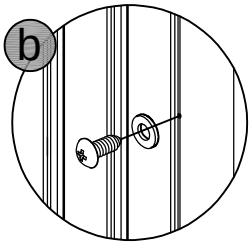

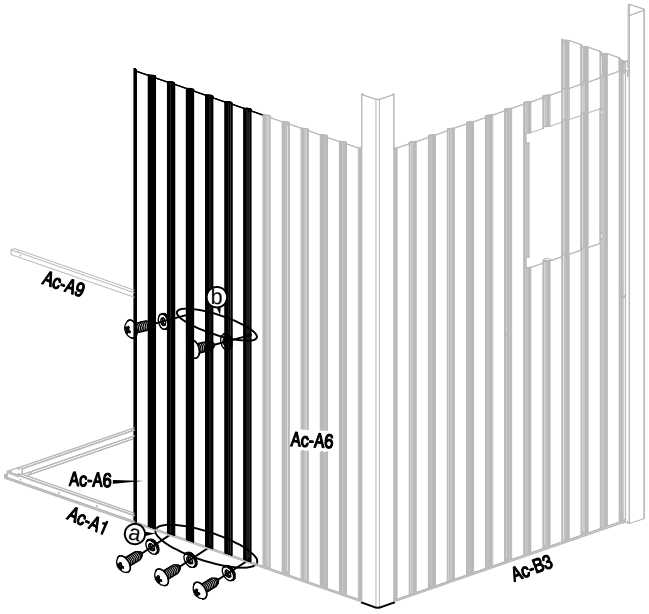

8	Ac-A6 x1	Ana-A5 x1	Ana-A41 x7	Ana-A40 x7	

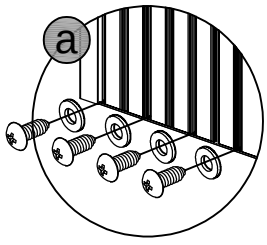

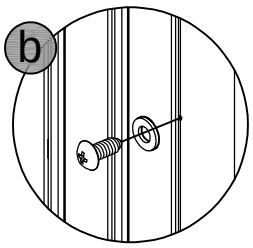

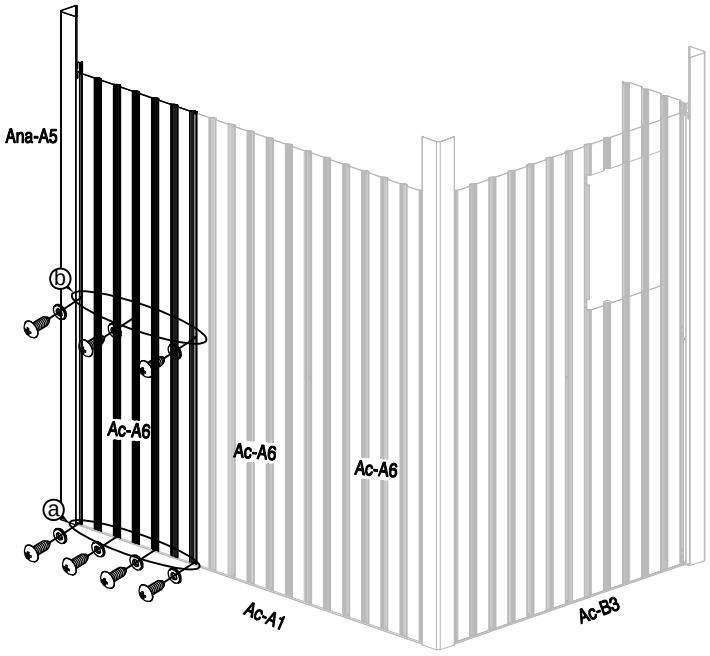

9					
	Ac-A6 x1	Ac-B10 x1	Ana-A41 x5	Ana-A40 x5	

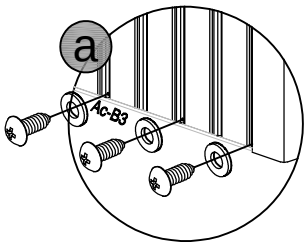

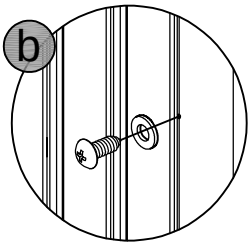

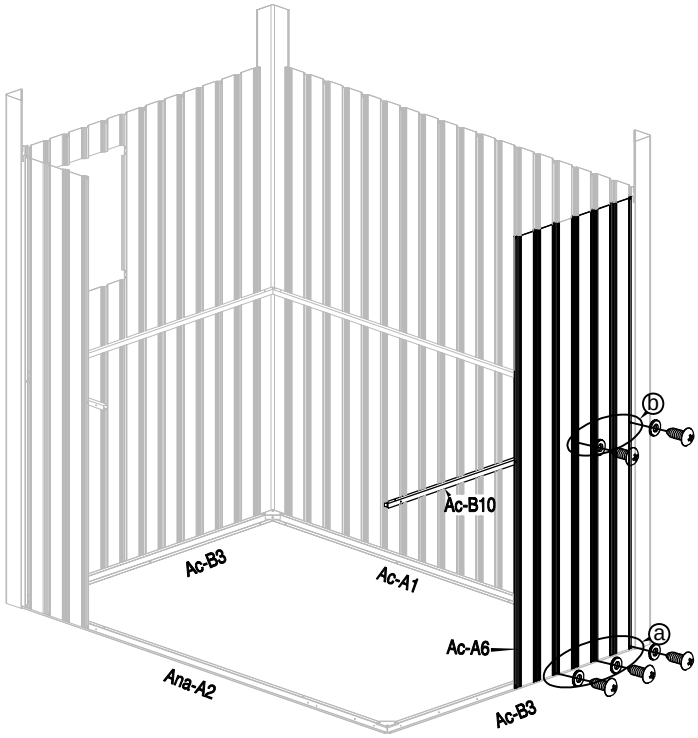

10					
	Ac-A6 x1	Ana-A5 x1	Ana-A41 x7	Ana-A40 x7	

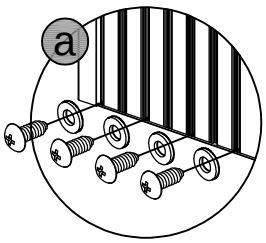

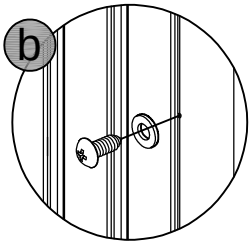

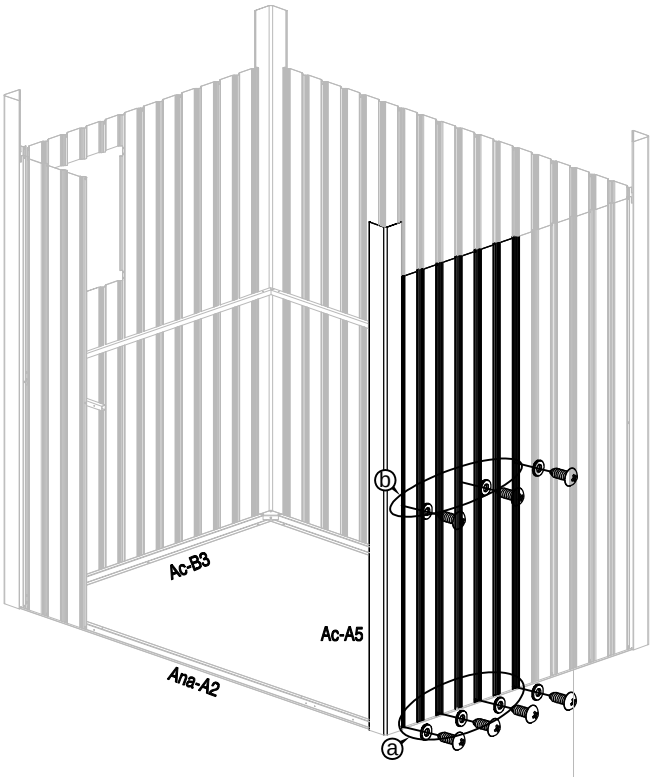

11	Ac-A8 x1	Ac-A11 x1	Ana-A41 x3	Ana-A40 x3	

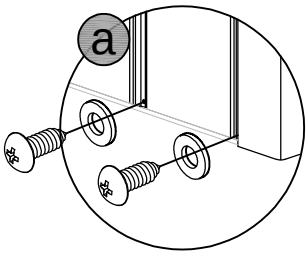

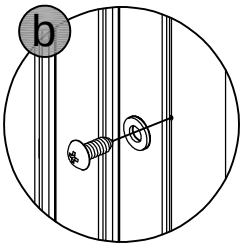

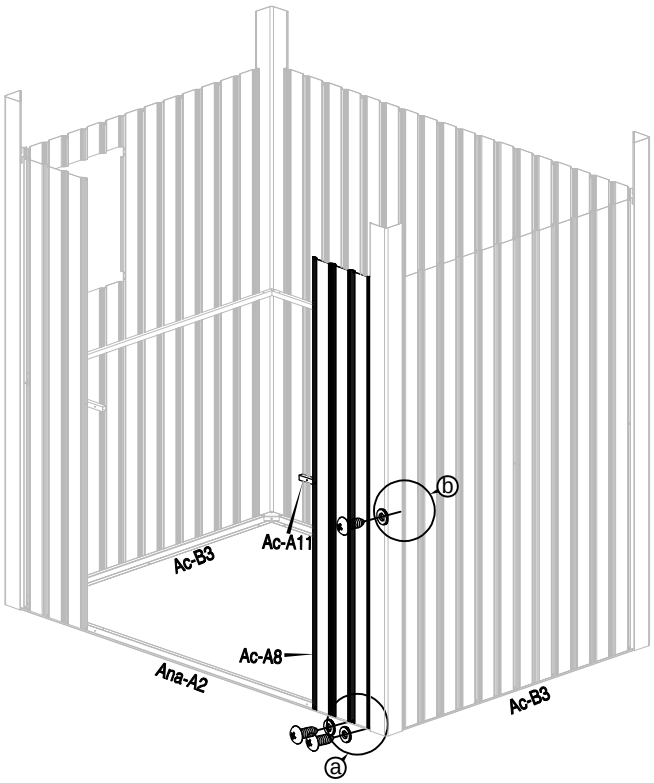

12	Ab-4 x4	Ana-A41 x12	

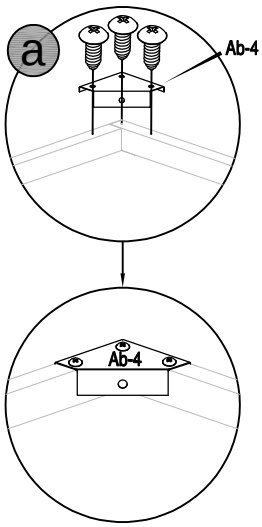

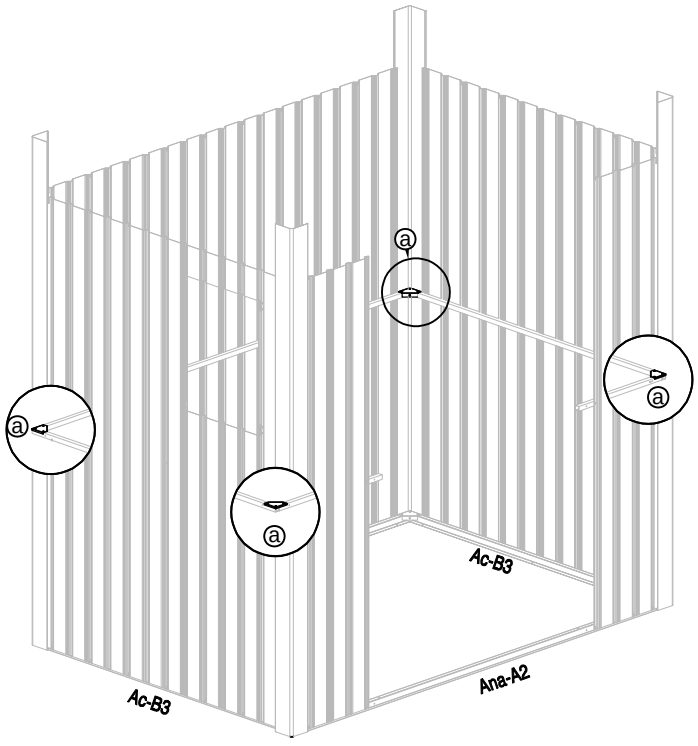

13					
	Ana-A13 x1	Ana-A14 x1	Ana-A41 x11	Ana-A40 x11	

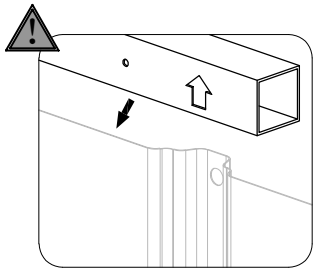

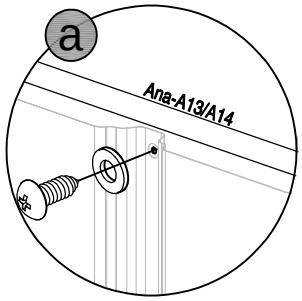

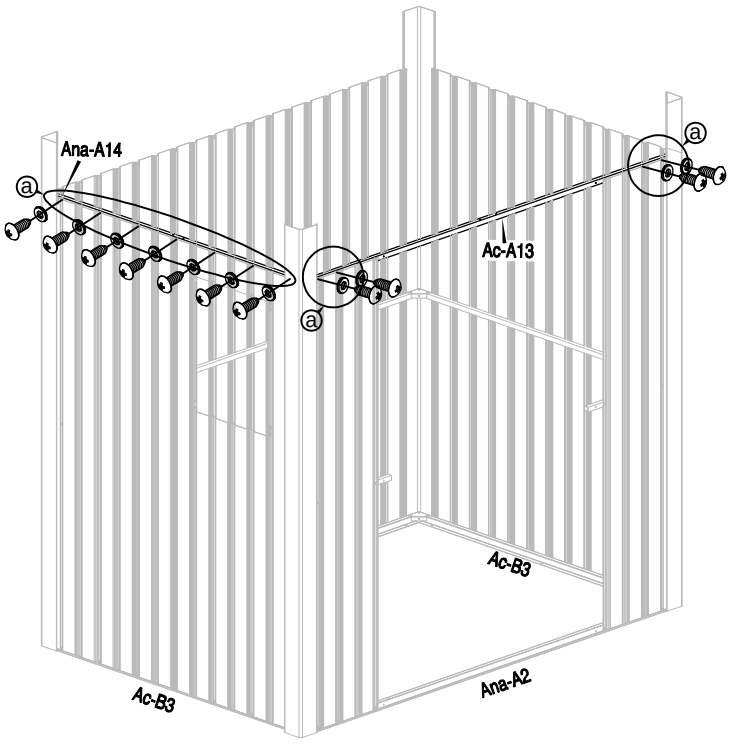

14					
	Ana-A12 x1	Ana-A14 x1	Ana-A41 x17	Ana-A40 x17	

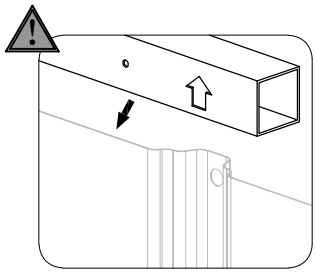

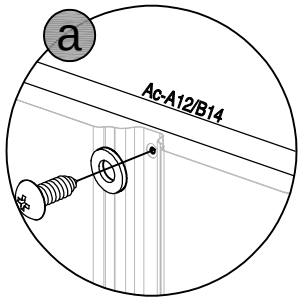

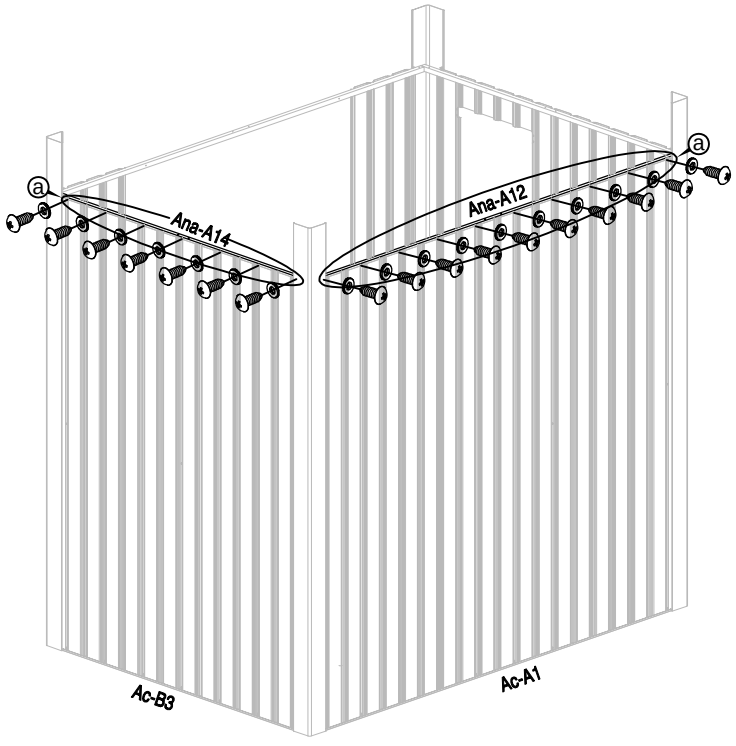

15

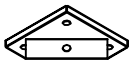

Ab-4 x4



Ana-A41 x12

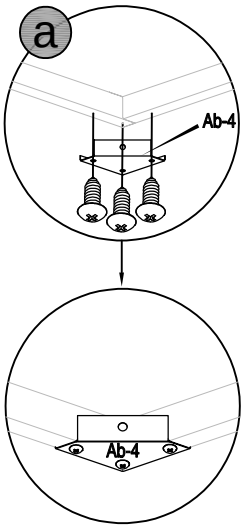

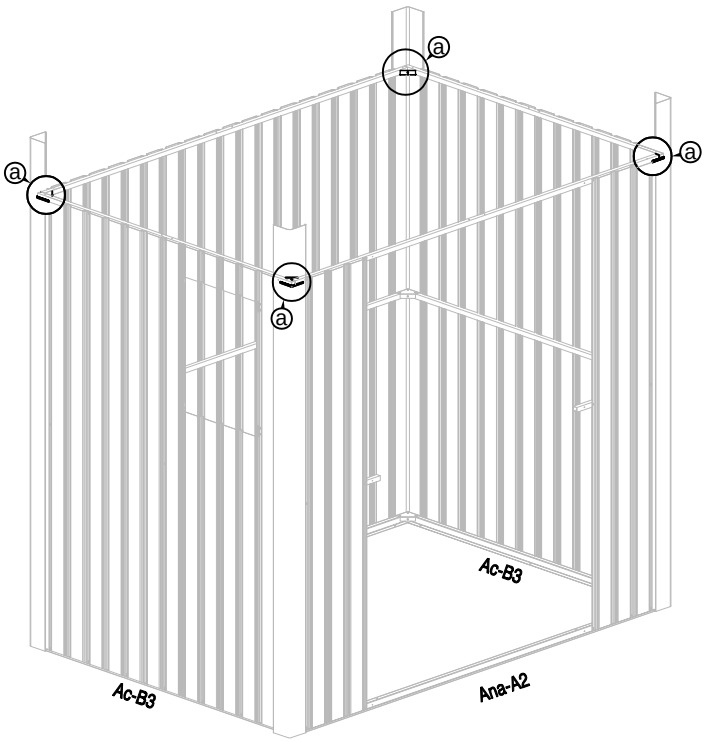

16



Ana-A4 x1



Ana-A41 x4

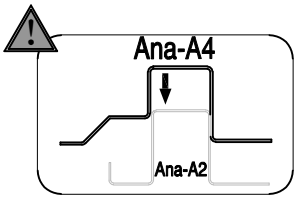

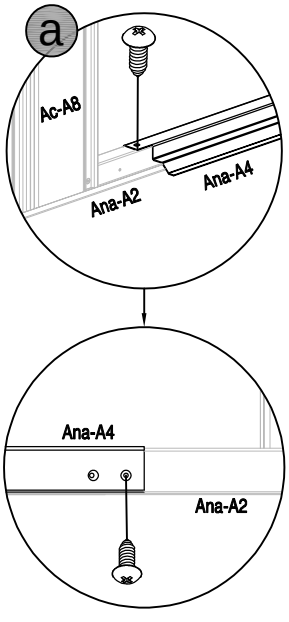

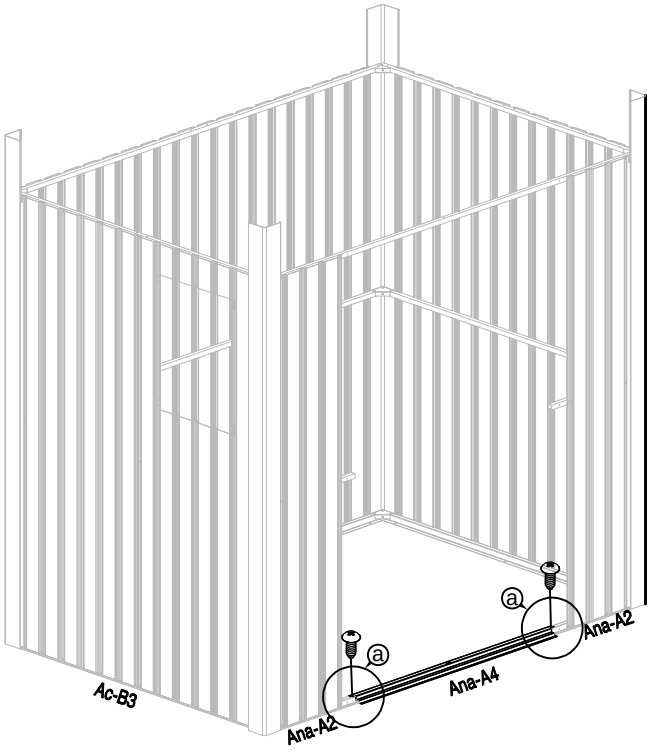

17


Ana-A15 x1


Ana-A15a x1


Ana-A41 x6

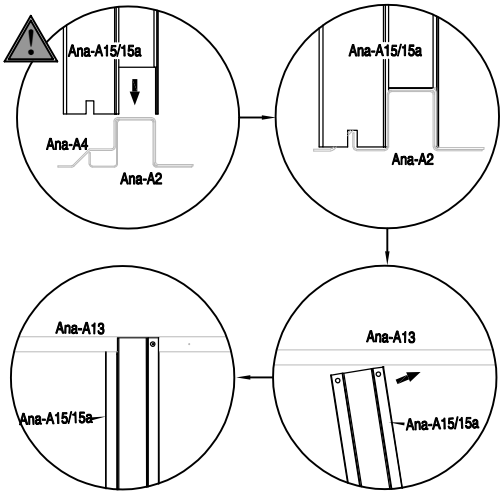

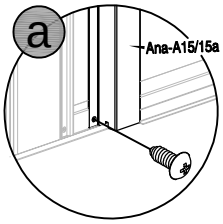

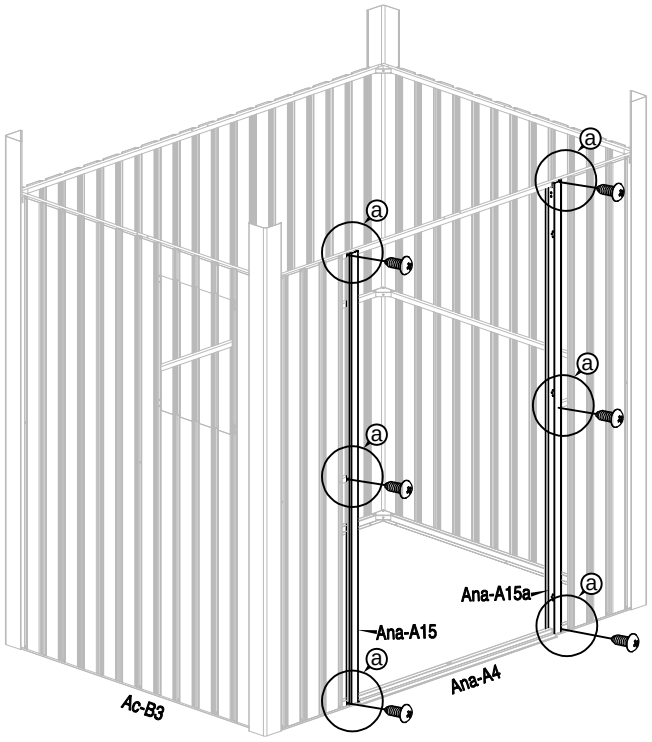

18

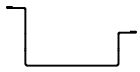
Ana-A16 x1

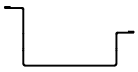
Ana-A16a x1


Ana-A41 x10


Ana-A40 x6

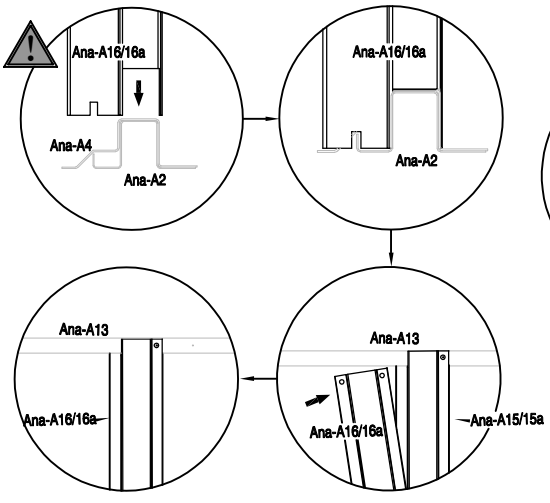

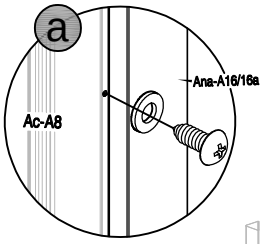

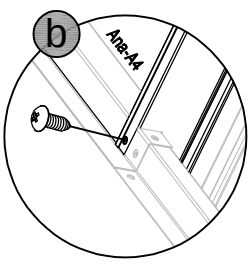

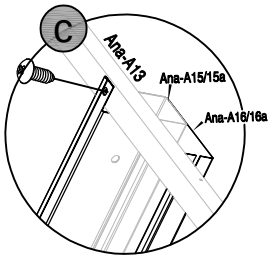

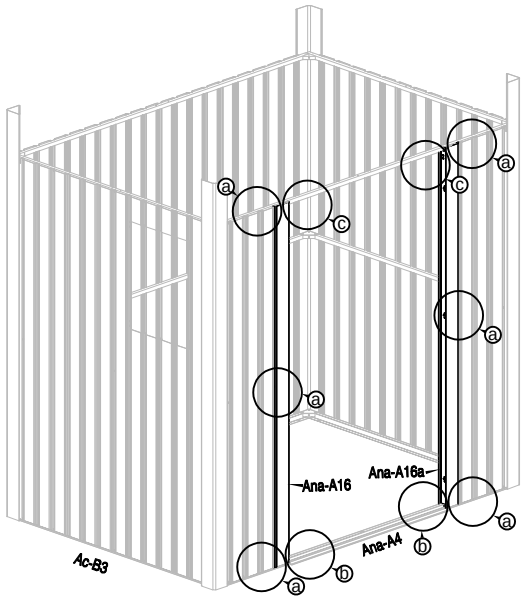

19



Ana-A17 x1



Ana-A44 x4

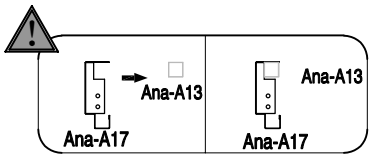

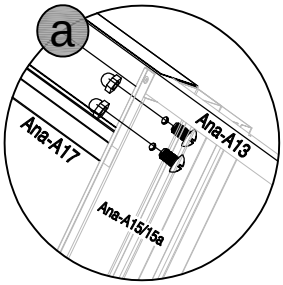

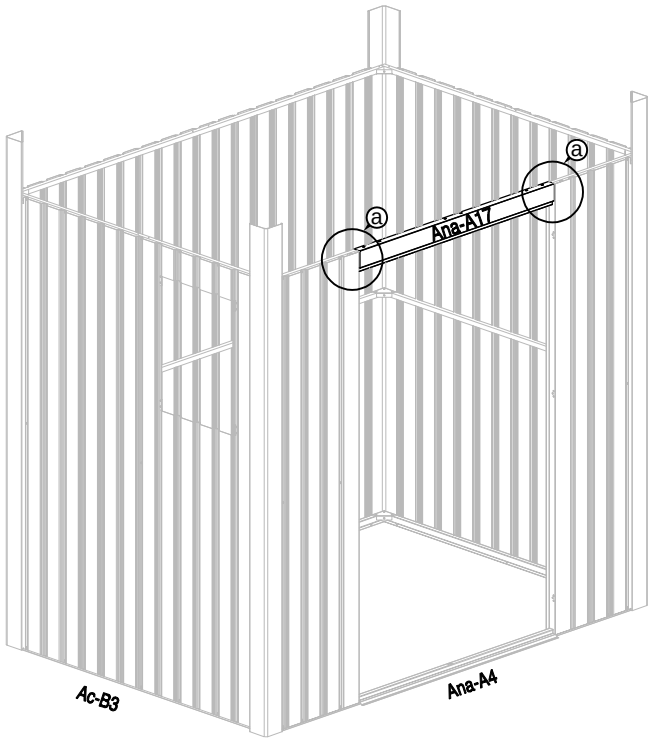

20



Ana-A18 x2



Ana-A19 x2

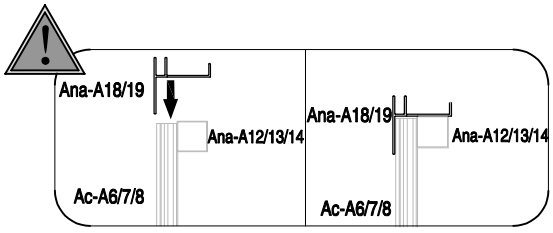

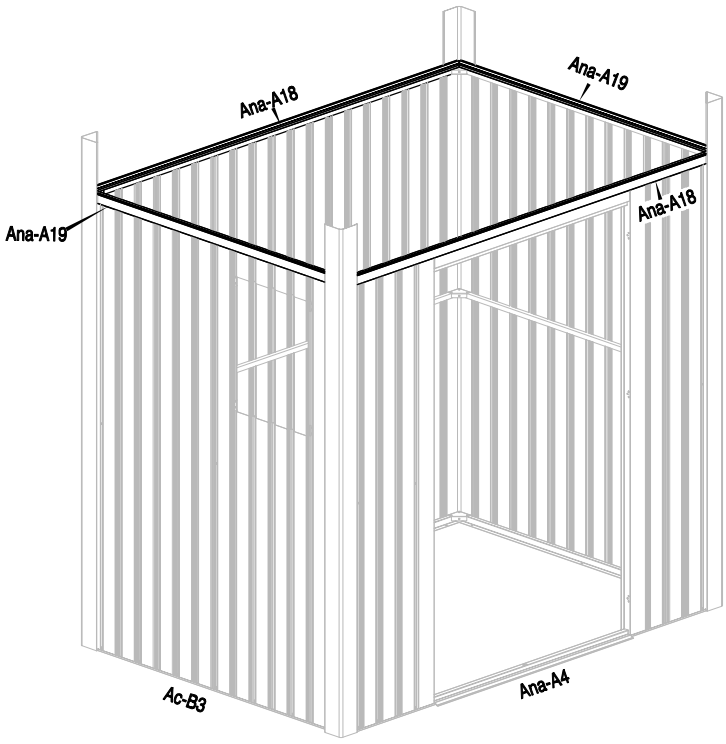

21

Ana-A22 x2	Ana-A22b x2	Ana-A22a x4	Ana-A41 x16	

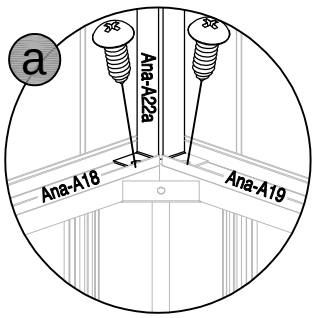

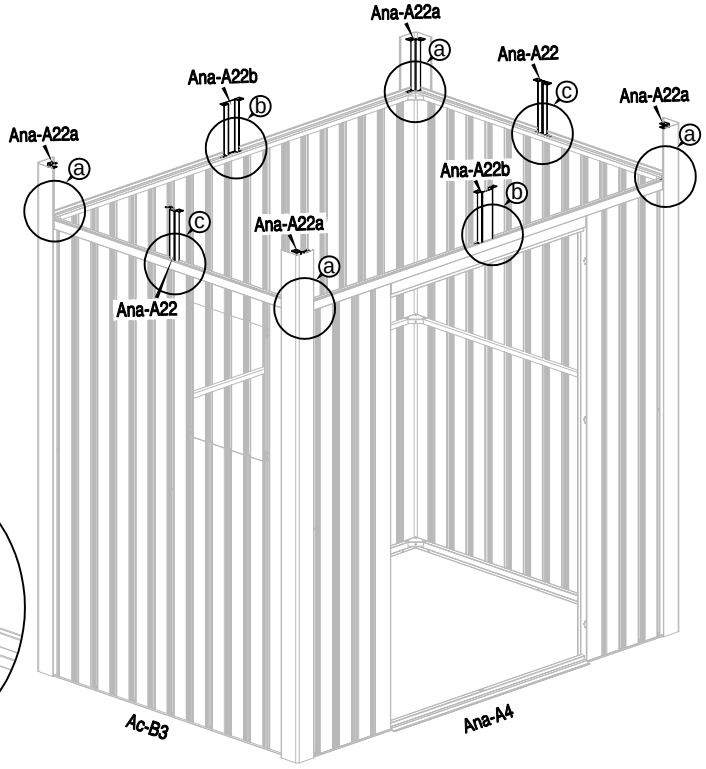

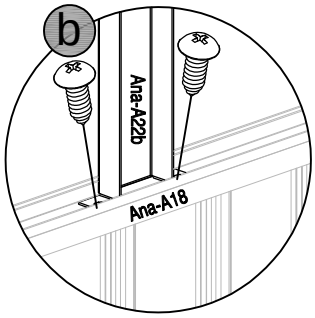

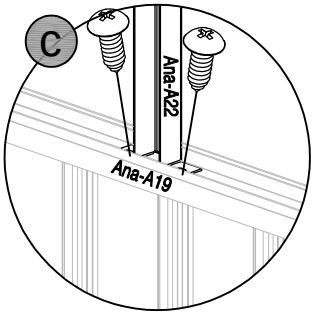

22

Ana-A36 x1	Ana-A36a x2	Ana-A38 x1	

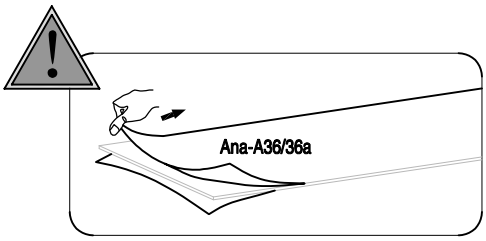

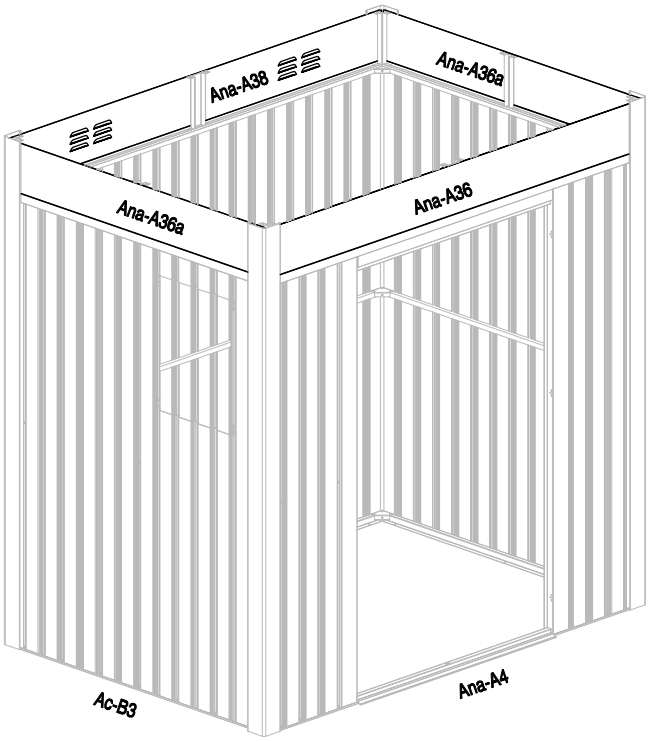



23

Ana-A23 x2 | Ana-A18 x2 | Ana-A41 x8

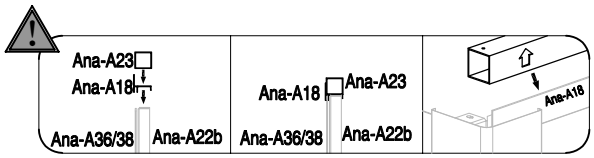

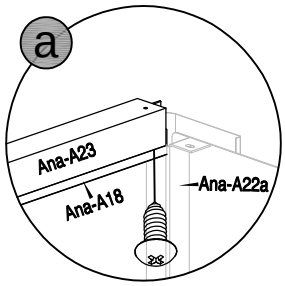

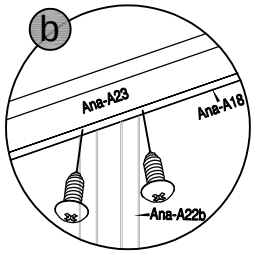

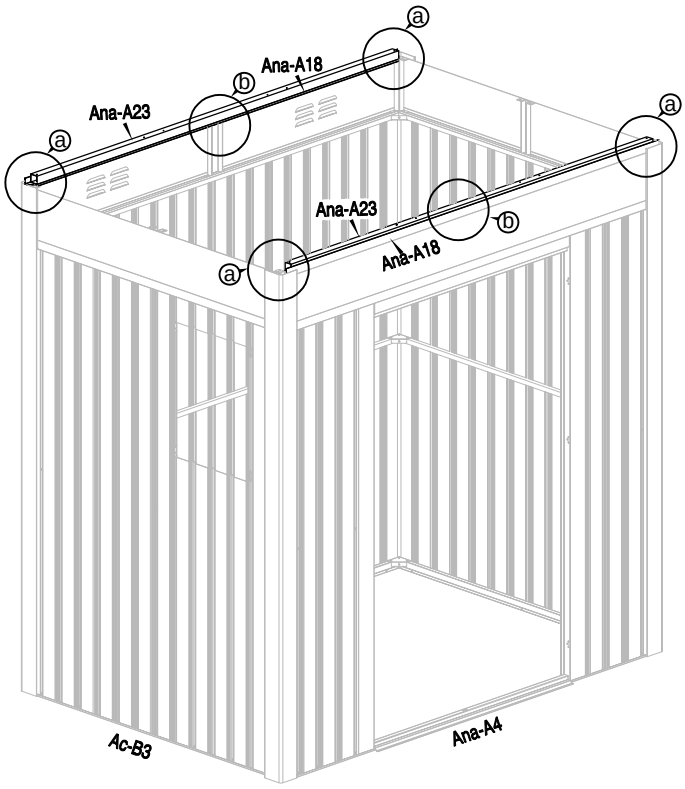

24

Ana-A27a x2 | Ana-A19 x2 | Ana-A41 x8

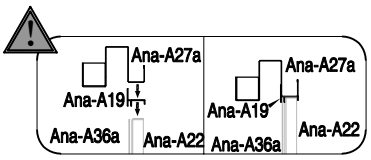

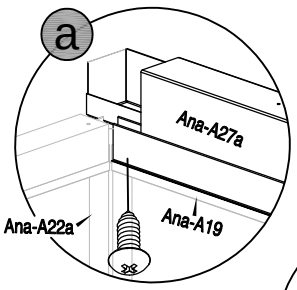

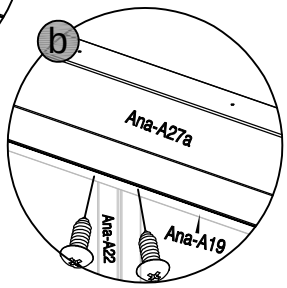

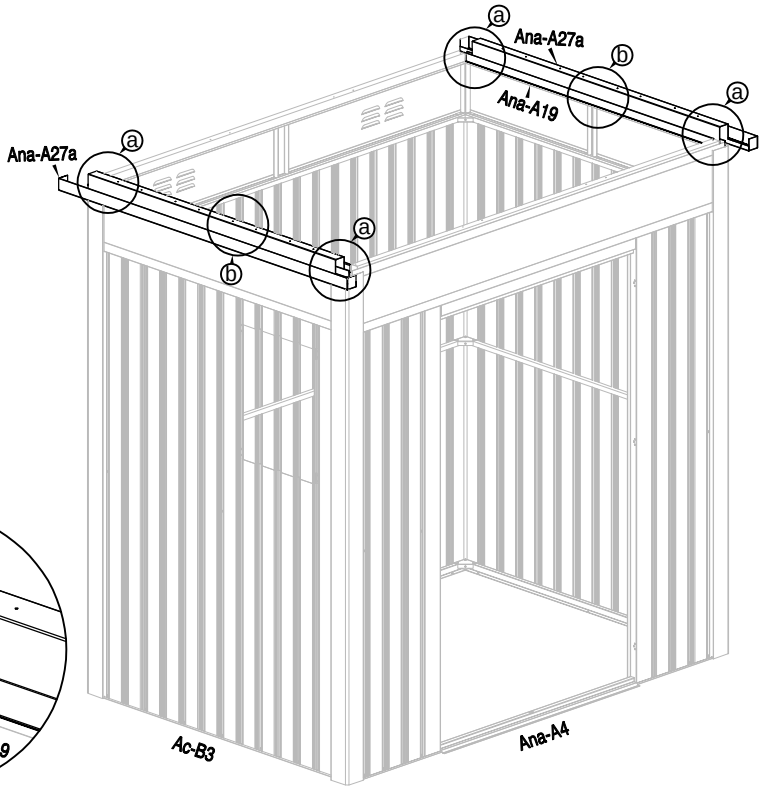

25		
	Ana-A27 x2	Ana-A41 x4

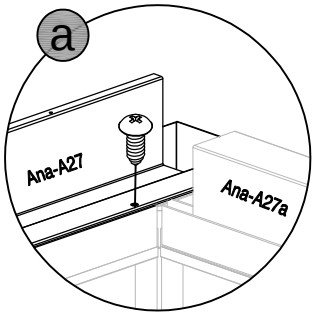

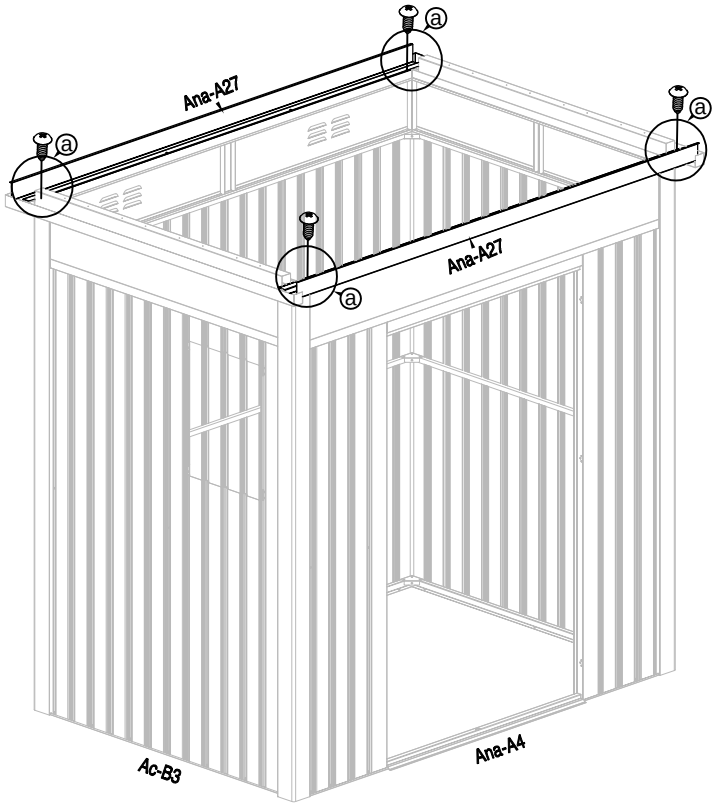

26		
	Ana-A26 x2	Ana-A41 x4

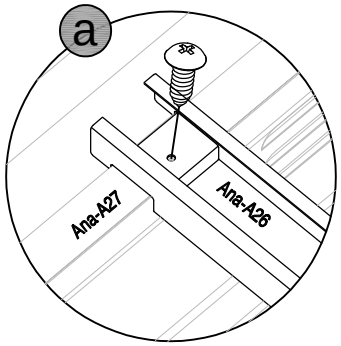

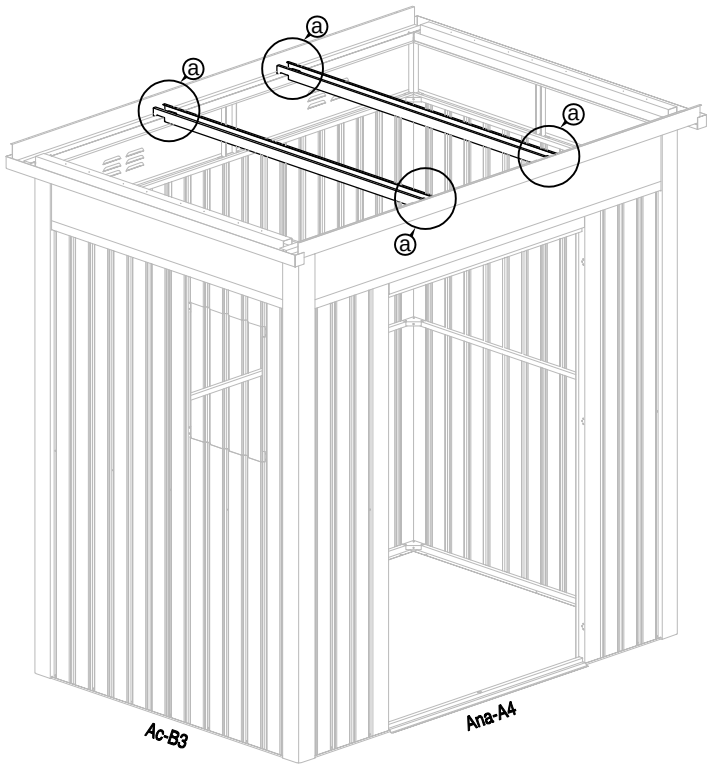

27				
	Ana-P1 x4			

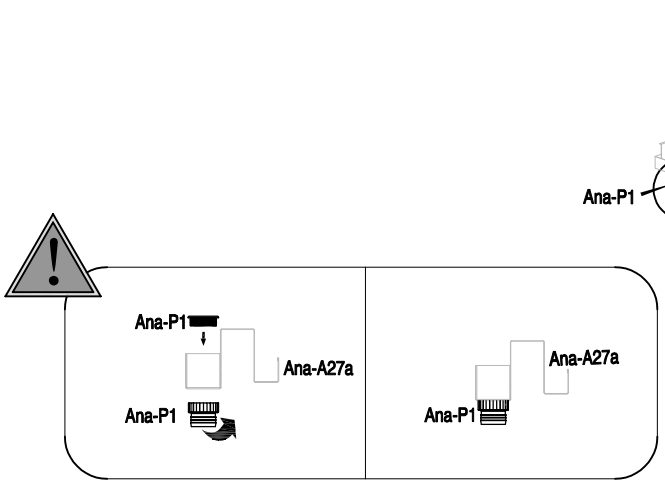

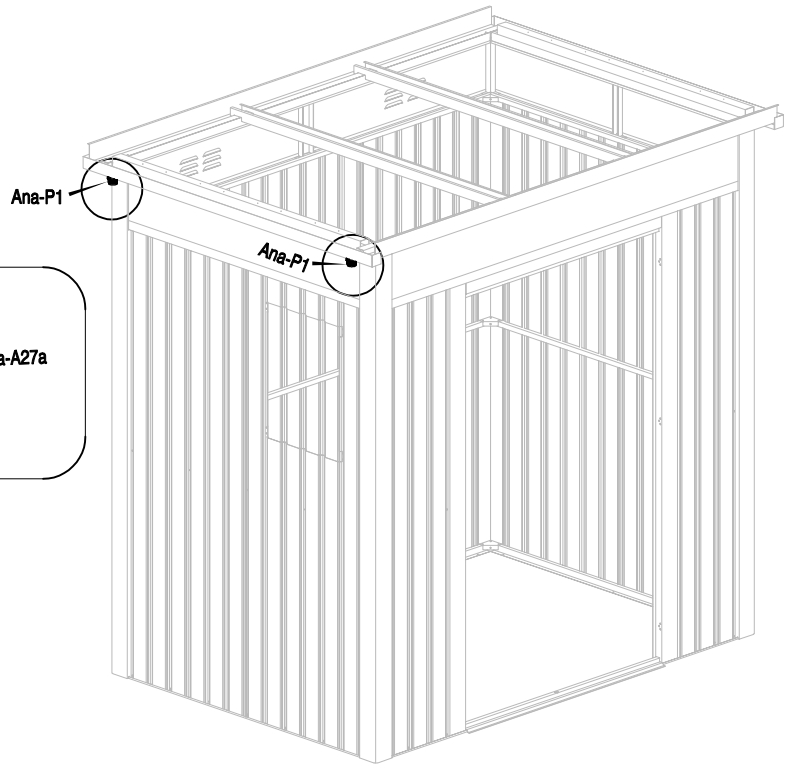

28				
	Ana-A25 x1	Ana-A41 x2	Ana-A40 x2	

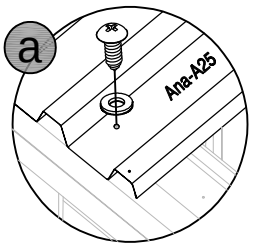

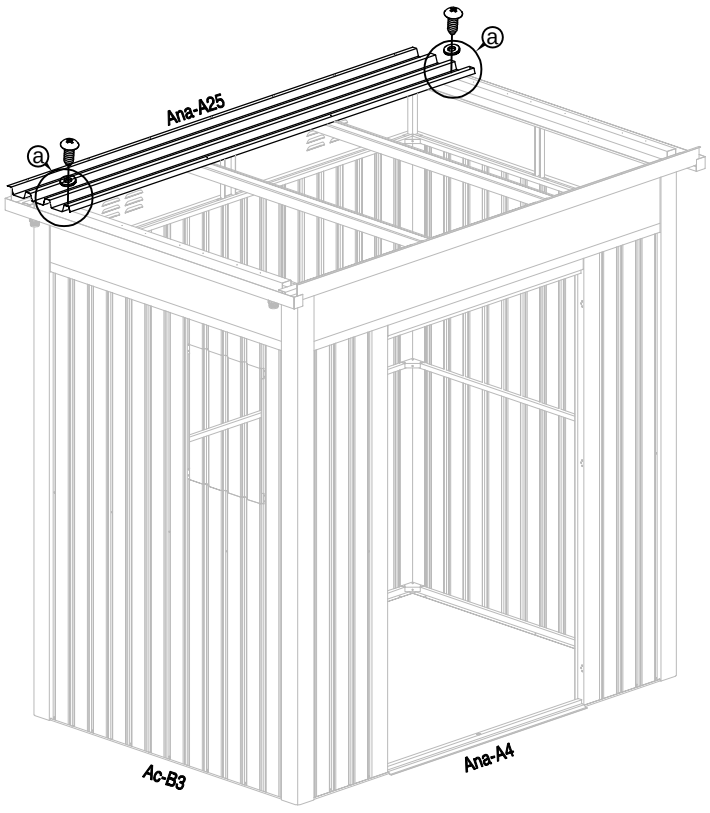

29				
	Ana-A24 x3	Ana-A41 x18	Ana-A40 x18	

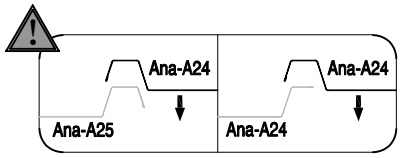

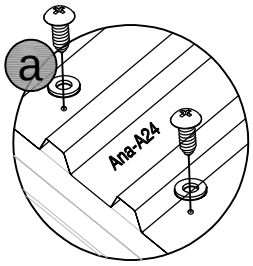

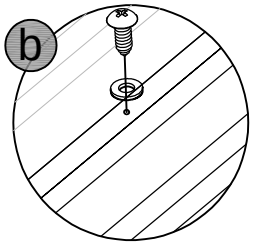

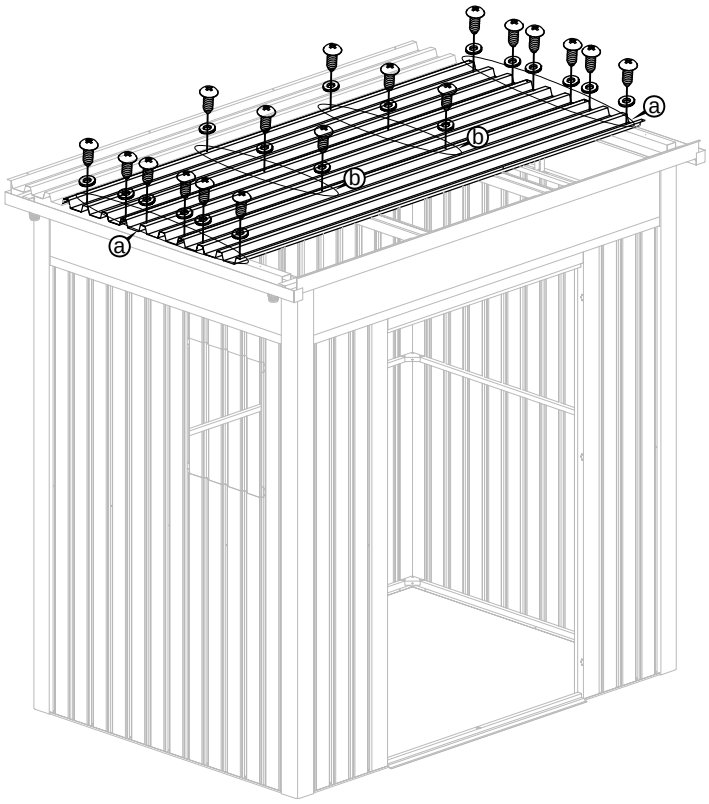

30				
	Ana-A25a x1	Ana-A41 x4	Ana-A40 x4	

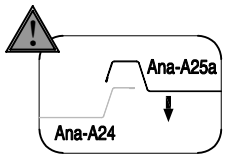

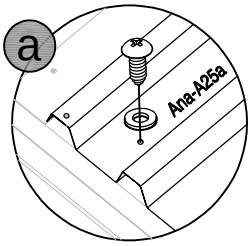

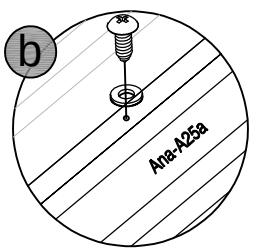

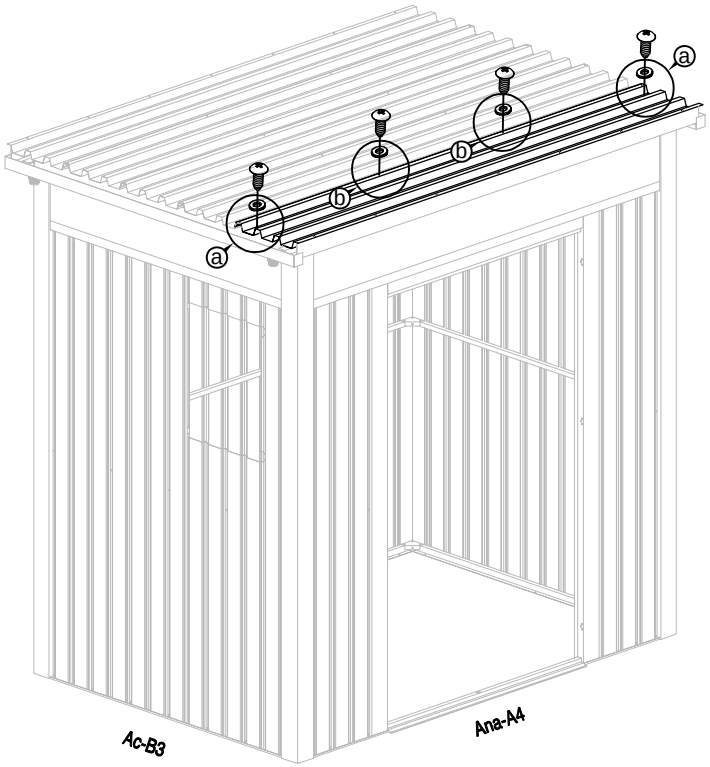

31					
	Ana-A28 x2	Ana-A28a x2	Ana-A41 x22	Ana-A40 x22	

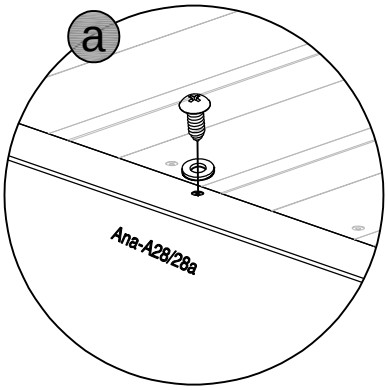

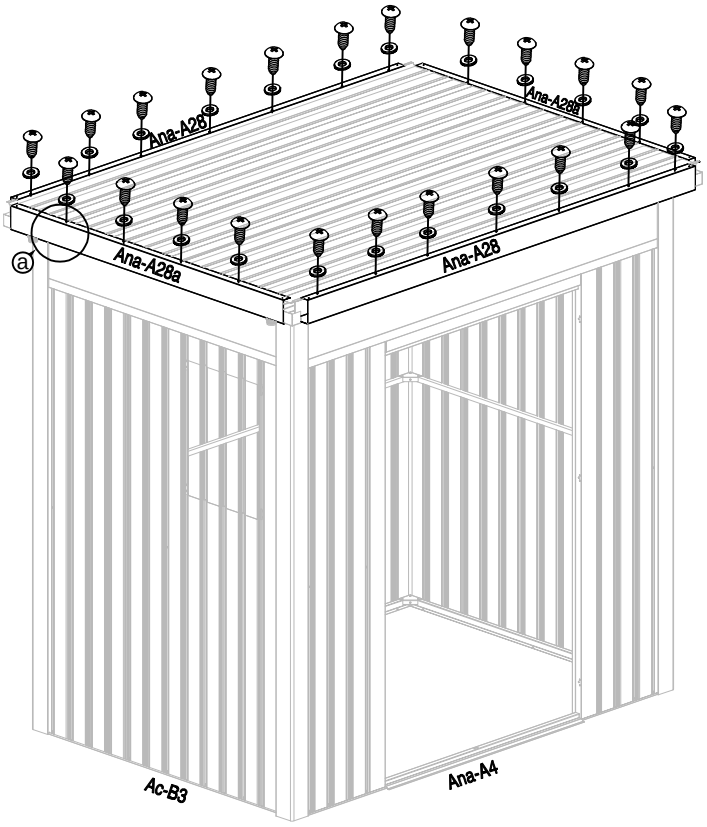

32			
	Ana-P2 x4	Ana-A41 x16	

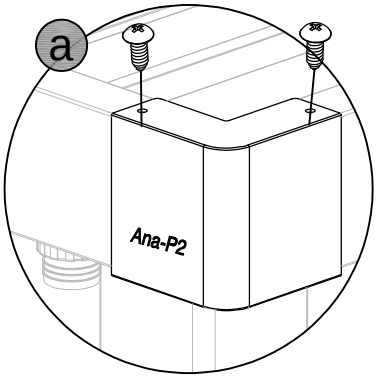

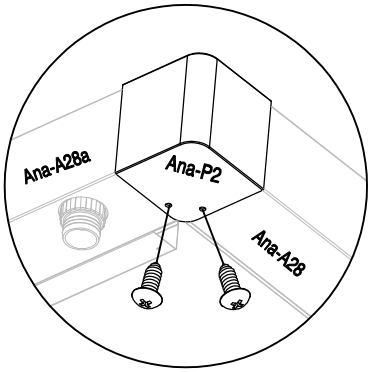

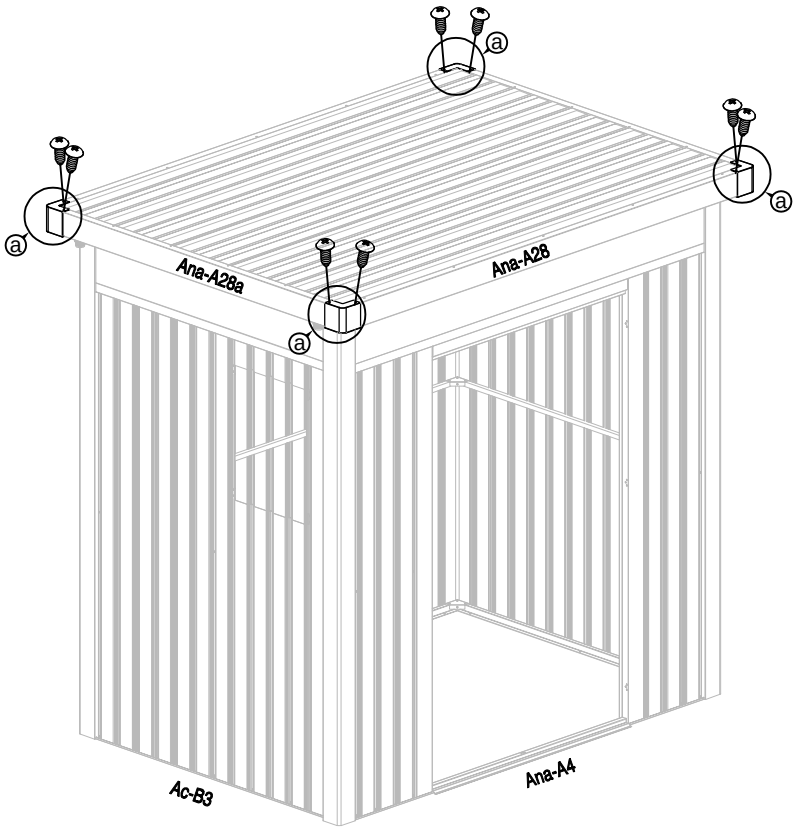

33			
	Ab-50 x6	Ana-A43 x18	

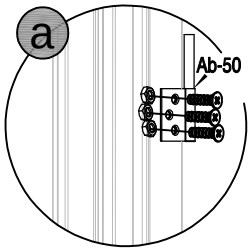

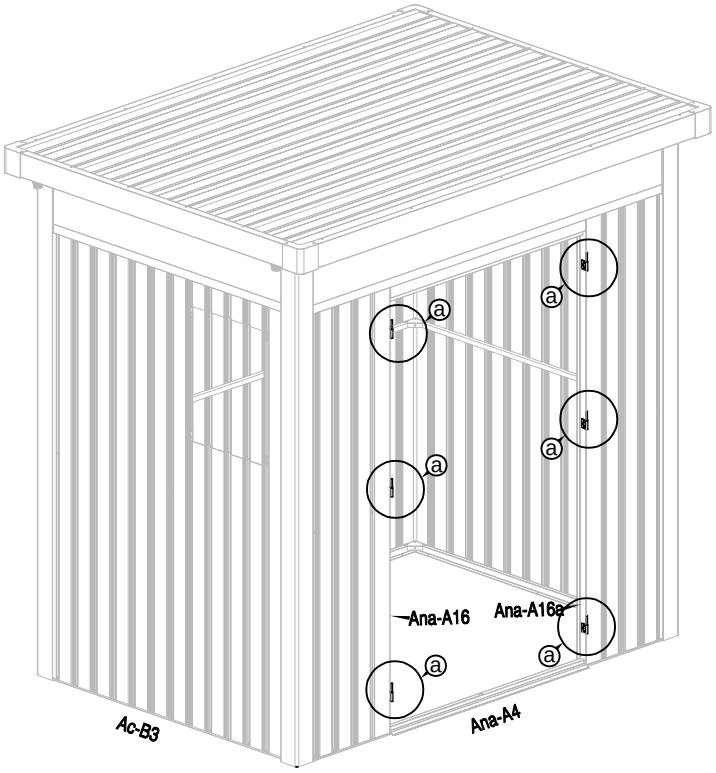

34							
	Ac-A29 x1	Ac-A29a x1	Ana-54 x1	Ana-55 x1	Ana-56 x1	Ana-57 x1	Ana-58 x3

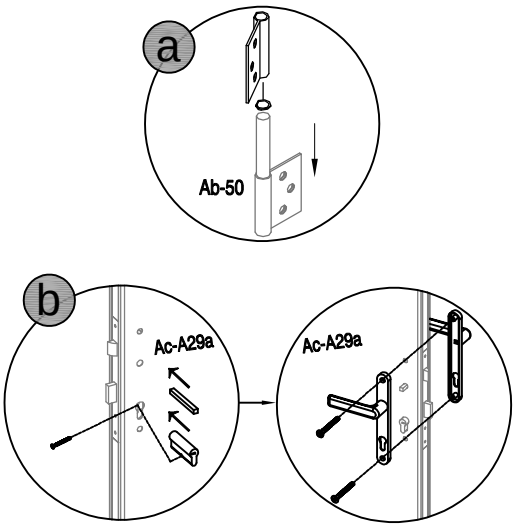

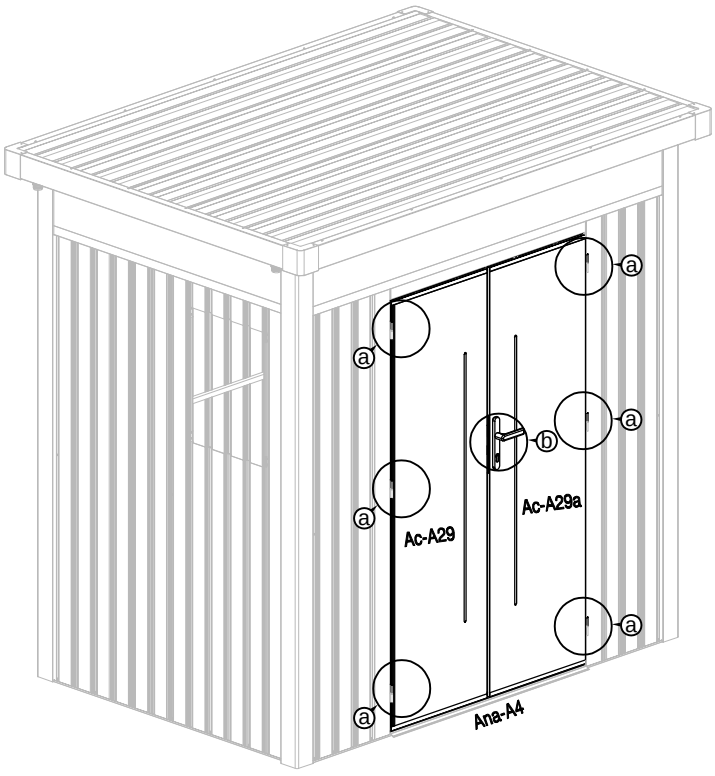

35



Ana-P6 x1



Ana-A41 x4

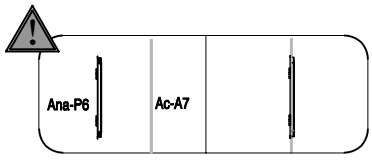

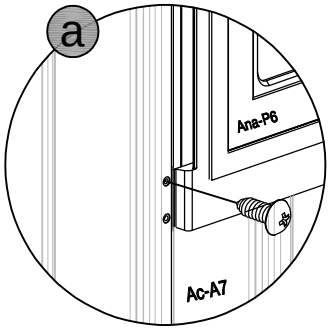

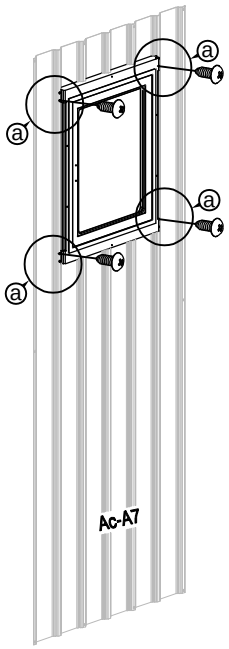

36



Ana-P7 x1



Ana-A41 x10

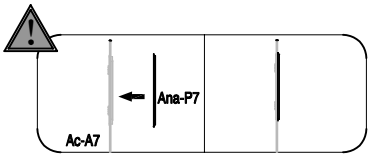

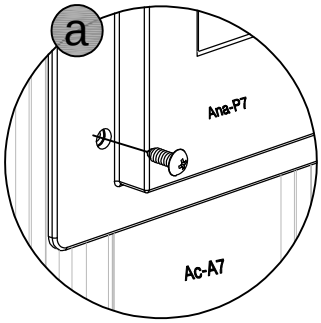

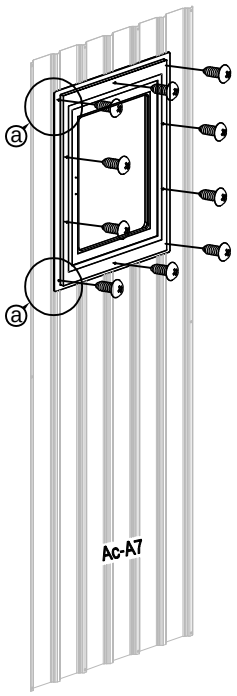

37	Ana-P8 x1	Ana-A42 x2	

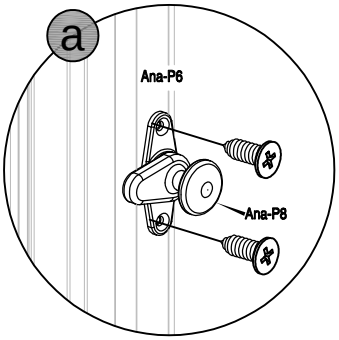

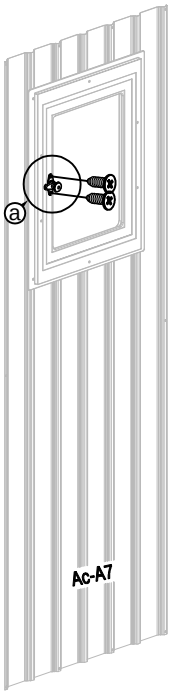

38	Ana-A37 x14M	

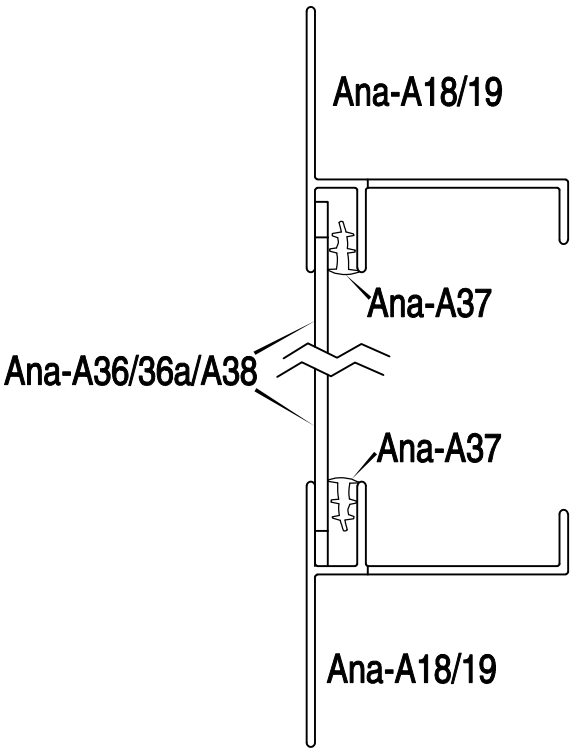

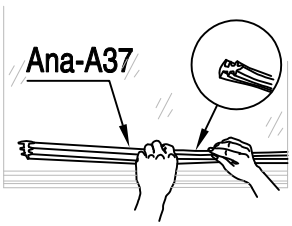

39

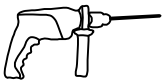

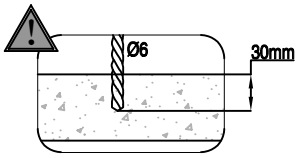

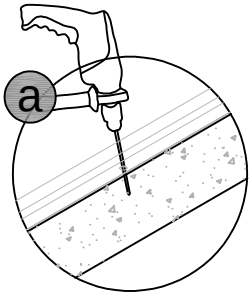

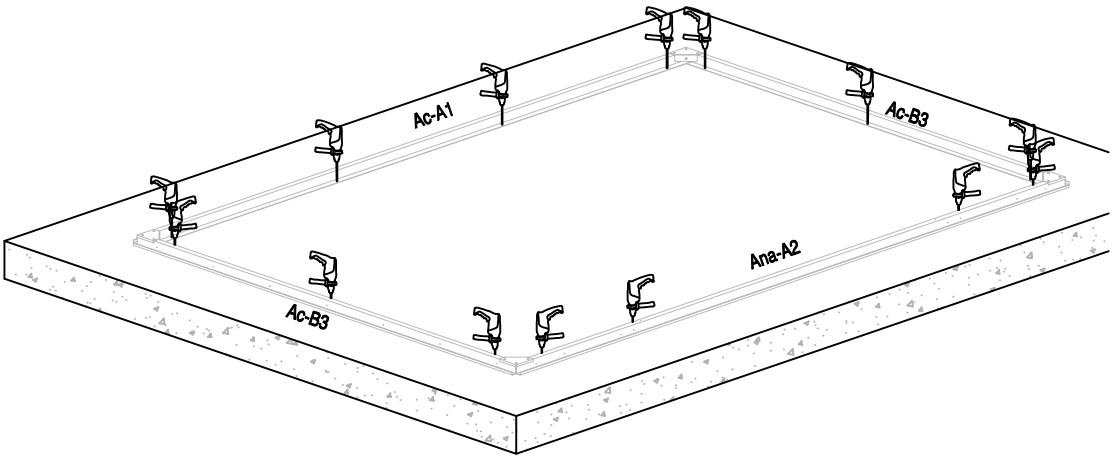

40



Ana-A45 x14

