Anna-B

OWNER'S MANUAL /
Instructions for Assembly

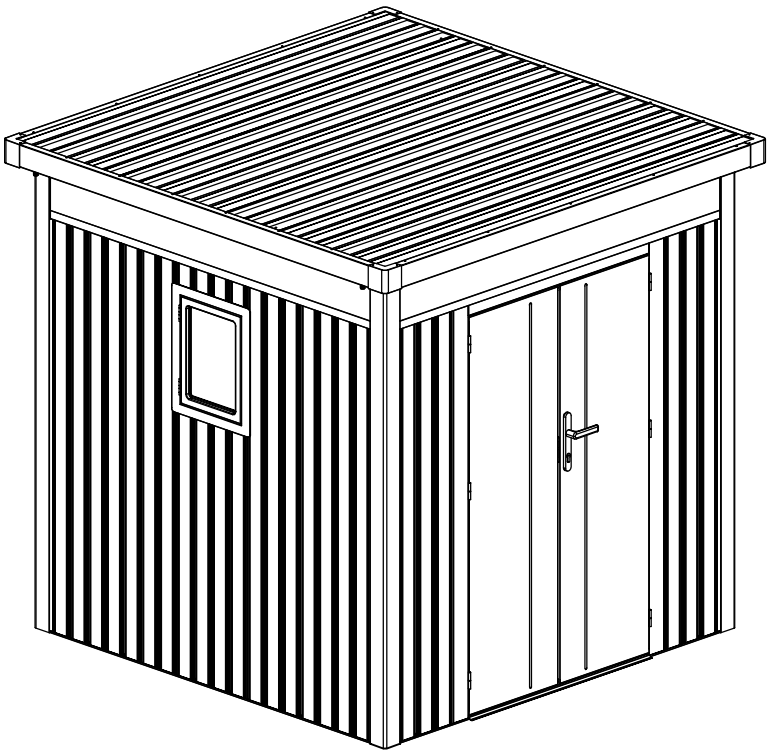



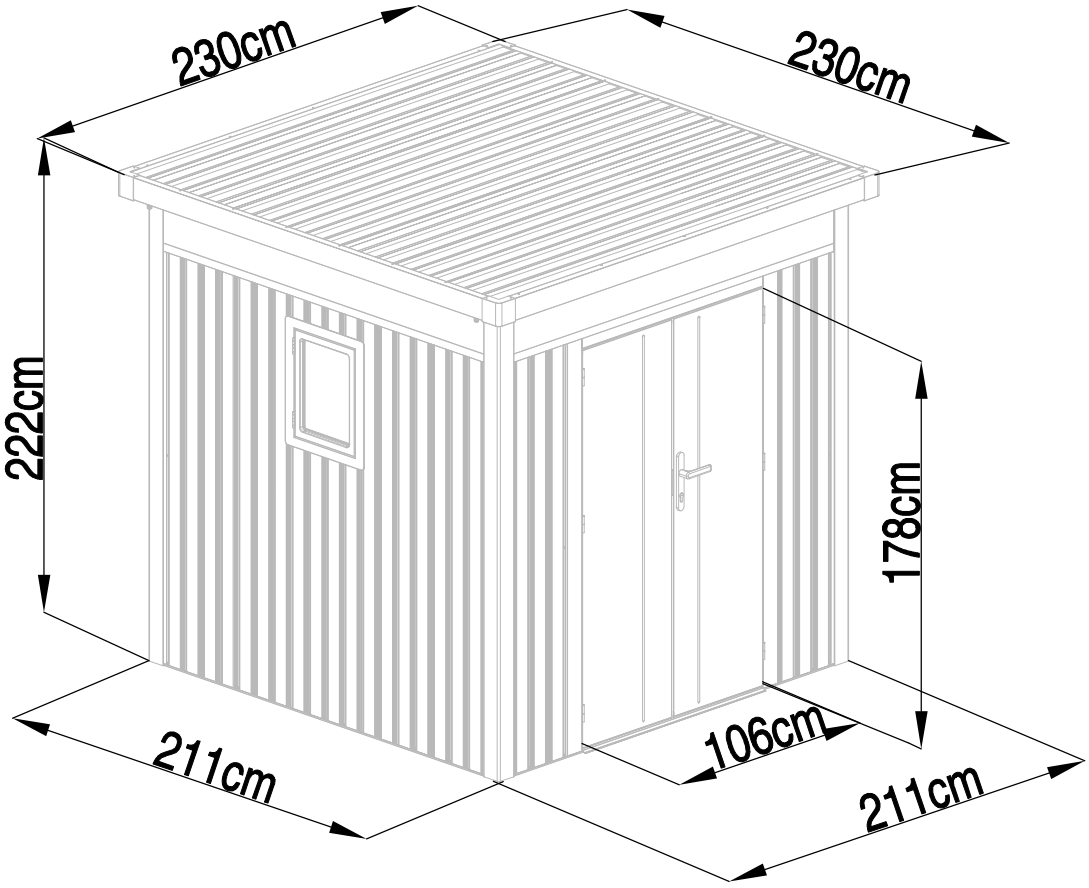

Area of installation requirement:

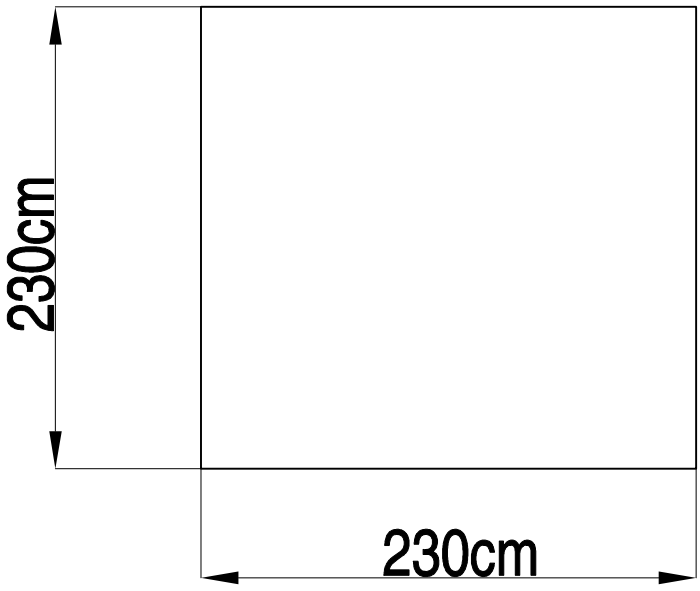

Anna-B:

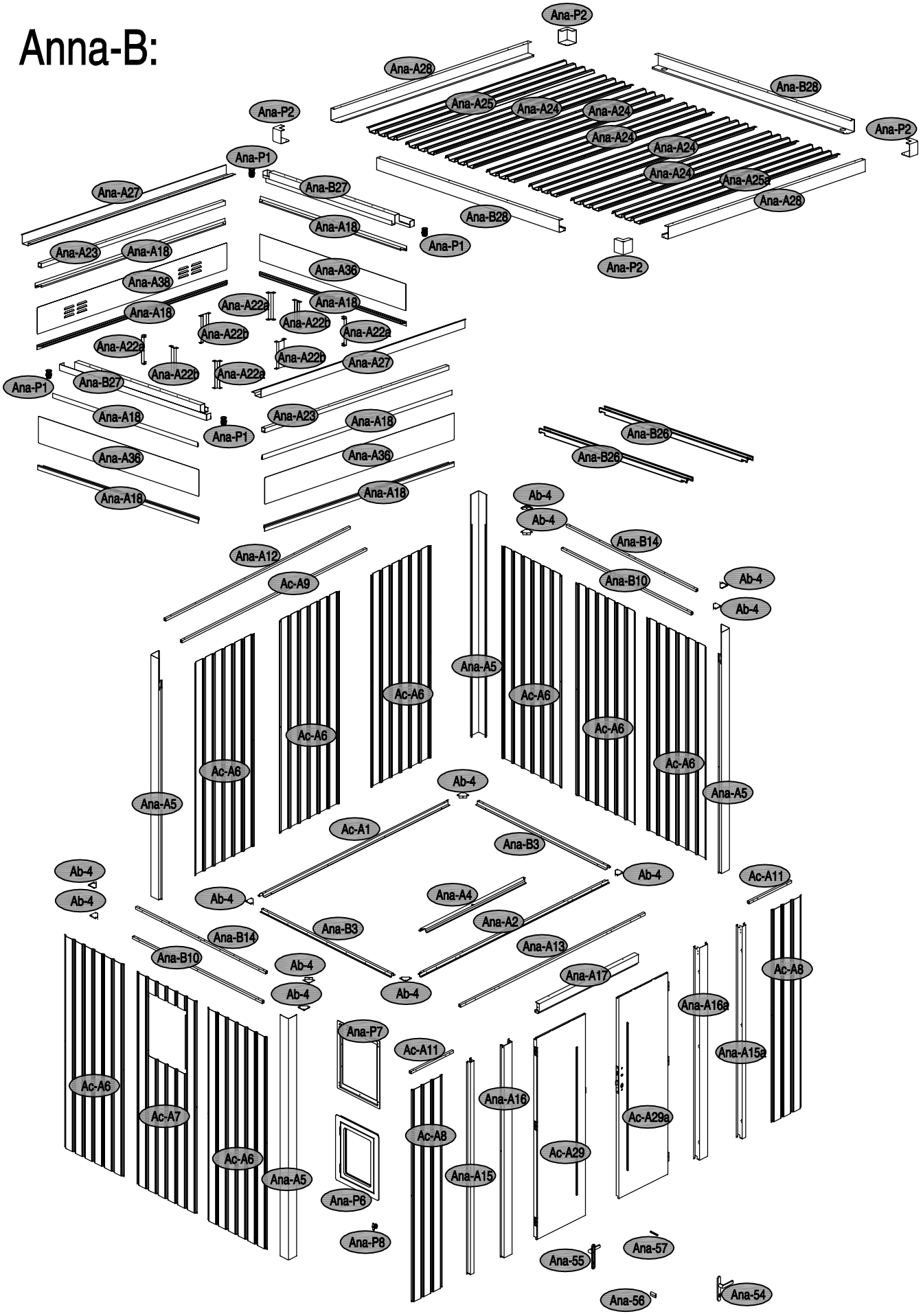
Ana-P2
Ana-A28
Ana-B28
Ana-A25
Ana-A24
Ana-A24
Ana-A24
Ana-A24
Ana-A24
Ana-A25a
Ana-A28
Ana-P2
Ana-P2
Ana-P1
Ana-A27
Ana-B27
Ana-A18
Ana-B28
Ana-P1
Ana-A23
Ana-A18
Ana-A36
Ana-A38
Ana-A18
Ana-A22a
Ana-A18
Ana-A22b
Ana-A22a
Ana-A22b
Ana-A22a
Ana-A22b
Ana-A27
Ana-A22b
Ana-A22a
Ana-P1
Ana-B27
Ana-A18
Ana-P1
Ana-A23
Ana-A18
Ana-A36
Ana-A36
Ana-A18
Ana-B26
Ana-B26
Ana-A18
Ab-4
Ab-4
Ana-B14
Ana-A12
Ac-A9
Ana-B10
Ab-4
Ab-4
Ana-A5
Ac-A6
Ac-A6
Ac-A6
Ac-A6
Ac-A6
Ac-A6
Ana-A5
Ab-4
Ana-A5
Ac-A1
Ana-B3
Ab-4
Ac-A11
Ab-4
Ab-4
Ana-A4
Ana-A2
Ana-B3
Ana-B14
Ana-A13
Ana-B10
Ab-4
Ana-A17
Ac-A8
Ab-4
Ab-4
Ana-A16a
Ana-P7
Ac-A11
Ana-A15a
Ac-A6
Ana-A16
Ac-A7
Ac-A29a
Ac-A8
Ac-A6
Ac-A29
Ana-A5
Ana-A15
Ana-P6
Ana-P8
Ana-55
Ana-57
Ana-56
Ana-54

NO.	IMAGE	mm	QTY
UNDER			
Ac-A1	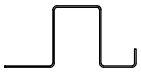	2064	x1
Ana-A2		2064	x1
Ana-B3		2064	x2
Ana-A4		1130	x1
MIDDLE			
Ana-A5		2124	x4
Ac-A6		1900	x8
Ac-A7		1900	x1
Ac-A8		1900	x2
Ac-A9	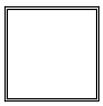	2024	x1
Ana-B10		2063	x2
Ac-A11		464	x2
Ana-A12		2024	x1
Ana-A13		2024	x1
Ana-B14		2063	x2
Ana-A15		1900	x1
Ana-A15a		1900	x1
Ana-A16	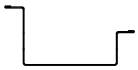	1900	x1
Ana-A16a		1900	x1
Ana-A17		1087.5	x1
Ana-A18		2077	x8
Ana-A22b		223	x4
Ana-A22a		223	x4
Ana-A23		2017	x2
Ana-A36		2077	x3
Ana-A38	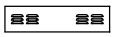	2077	x1
Ana-B26		2142.5	x2
Ana-A27		2236	x2
Ana-B27		2248	x2
DOOR			
Ac-A29		1804	x1
Ac-A29a		1804	x1

NO.	IMAGE	mm	QTY
TOP			
Ana-A24		2254	x5
Ana-A25		2254	x1
Ana-A25a		2254	x1
Ana-A28		2160	x2
Ana-B28		2159.5	x2
ANNEX			
Ab-4			x12
Ana-B37			16.5M
Ana-P1			x4
Ana-P2			x4
Ana-P6			x1
Ana-P7			x1
Ana-P8			x1
Ab-50			x6
Ana-54			x1
Ana-55			x1
Ana-56			x1
Ana-57			x1
Ana-58		M5x45	x3
Ana-B40			x154
Ana-B41		ST4x10	x279
Ana-A42		ST4x10	x2
Ana-A43		M4x10	x18
Ana-A44		M5x8	x4
Ana-B45		ST4x25	x16

1				
	Ac-A1 x1	Ana-A2 x1	Ana-B3 x2	

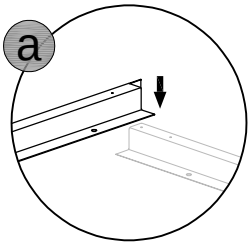

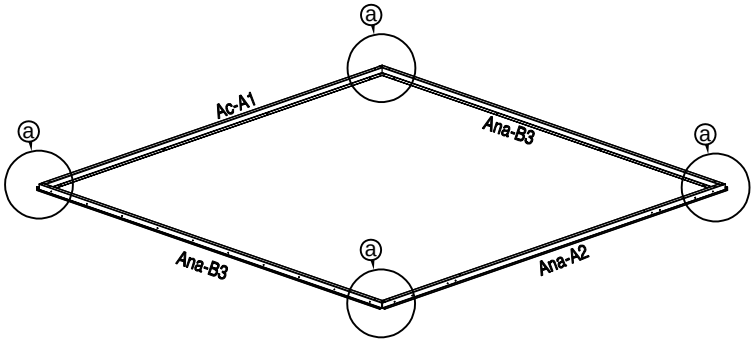

2			
	Ab-4 x4	Ana-B41 x12	

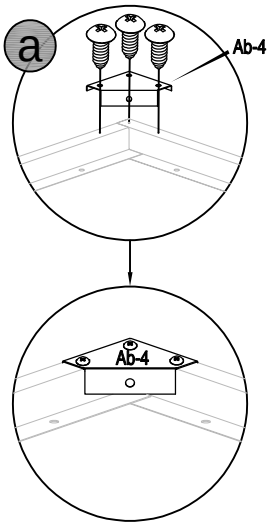

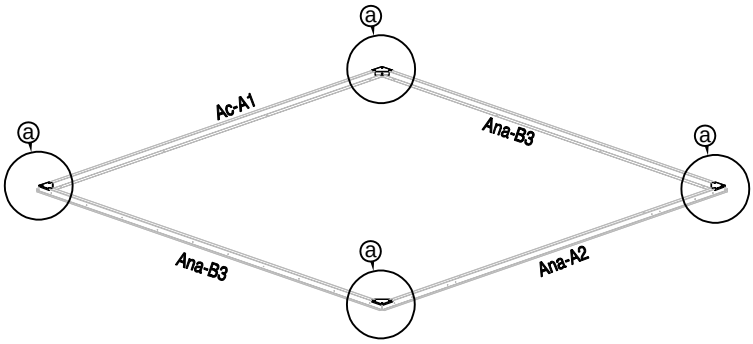

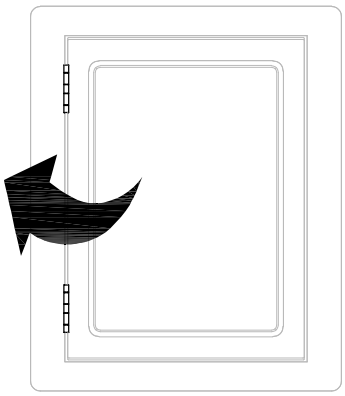

Or

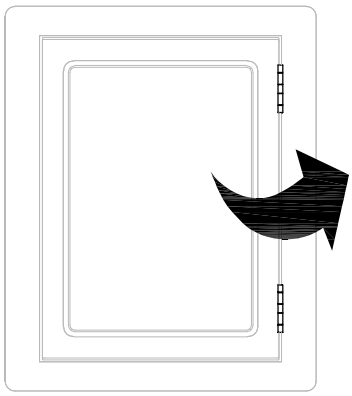

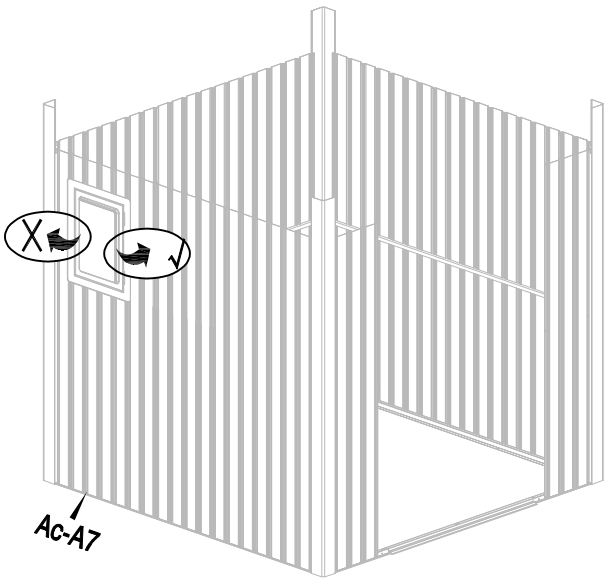

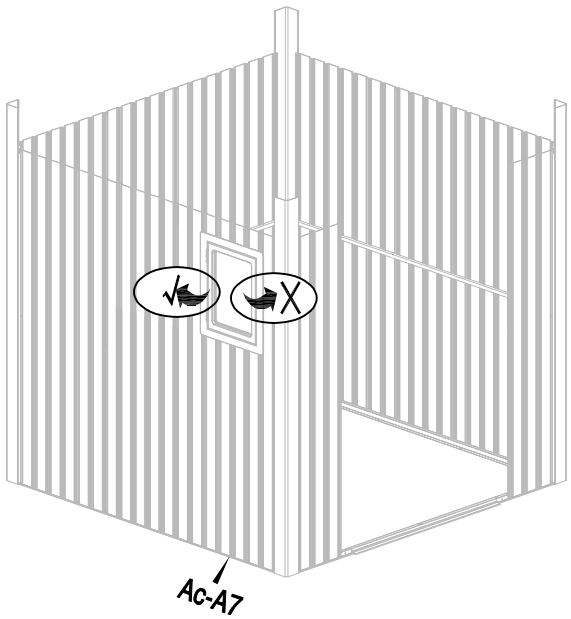

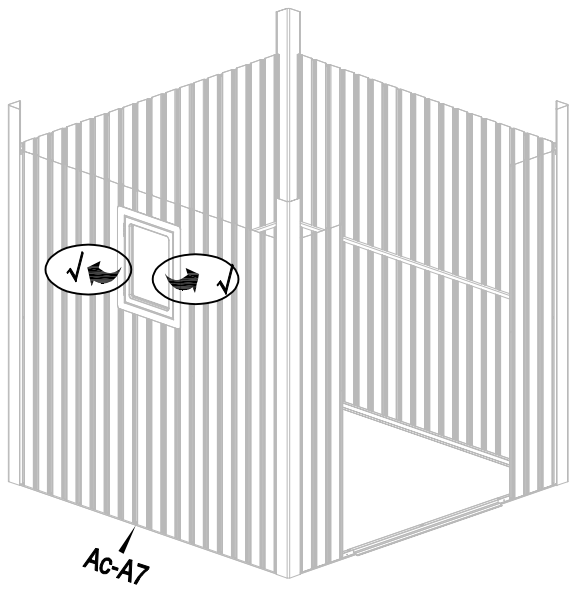
Ac-A7

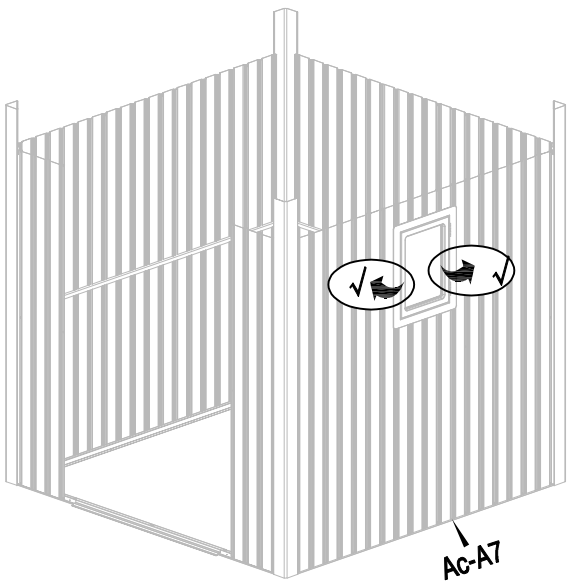
Ac-A7

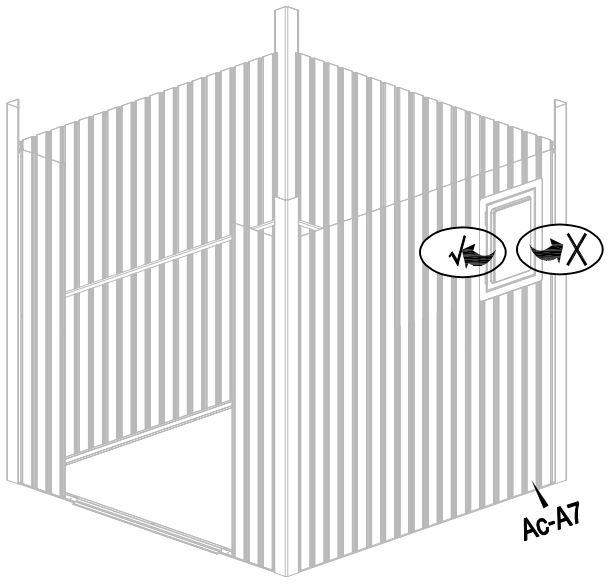
Ac-A7

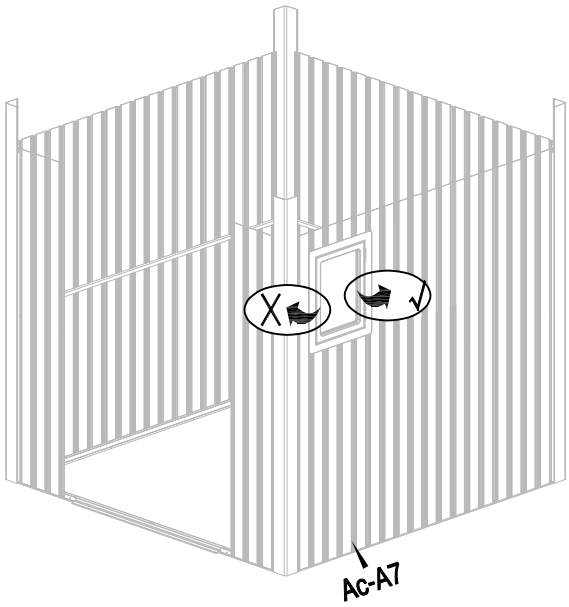
Ac-A7

3

Ac-A6 x1	Ana-A5 x1	Ana-B10 x1	Ana-B41 x5	Ana-B40 x5	

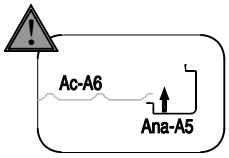

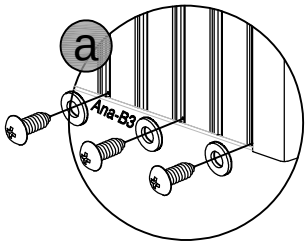

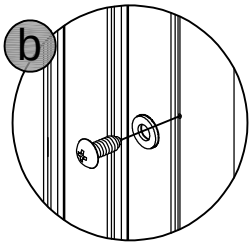

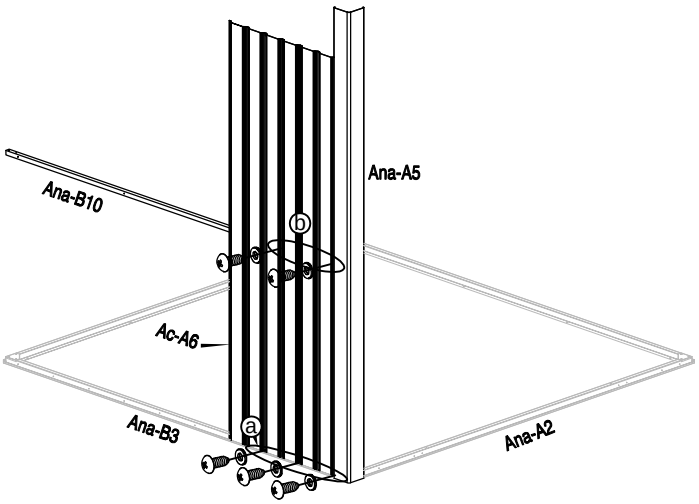

4

Ac-A8 x1	Ac-A11 x1	Ana-B41 x3	Ana-B40 x3	

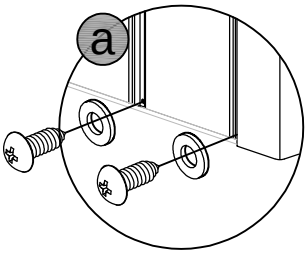

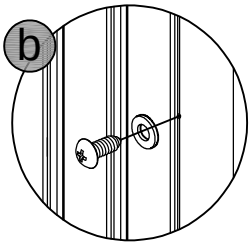

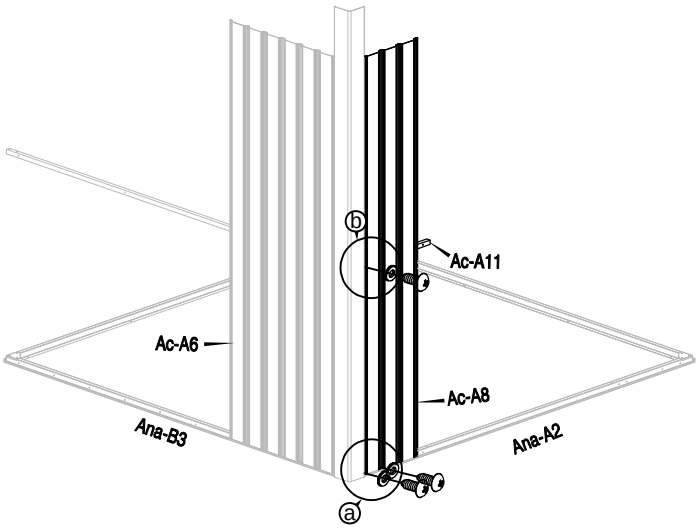

5				
	Ac-A7 x1	Ana-B41 x5	Ana-B40 x5	

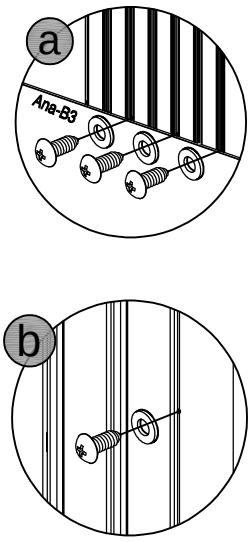

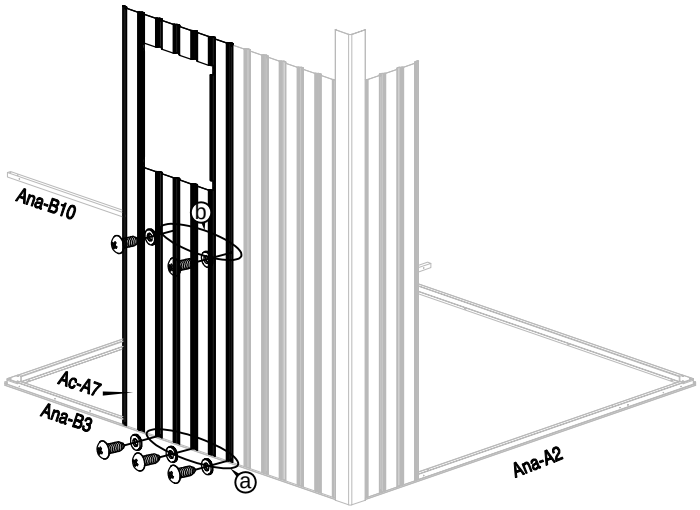

6					
	Ac-A6 x1	Ana-A5 x1	Ana-B41 x7	Ana-B40 x7	

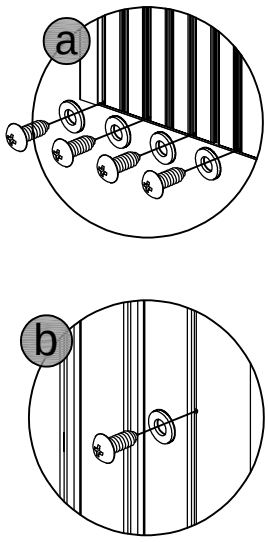

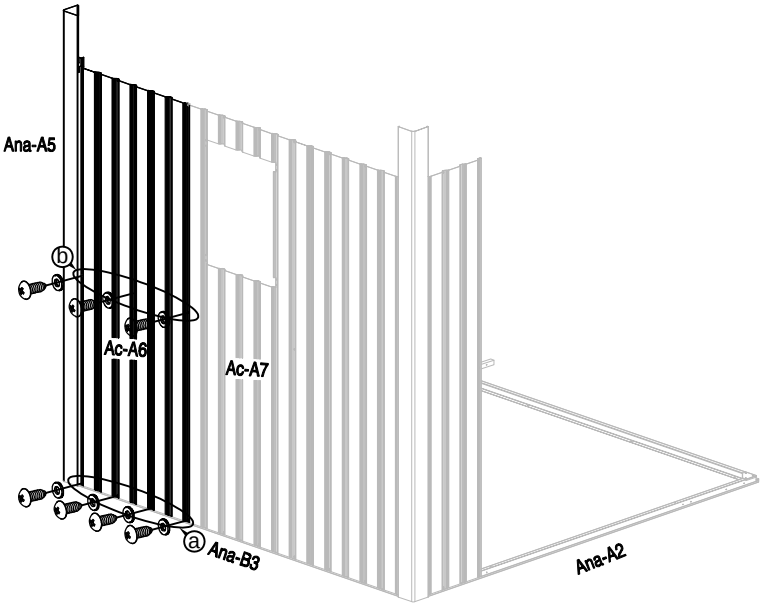

7					
	Ac-A6 x1	Ac-A9 x1	Ana-B41 x5	Ana-B40 x5	

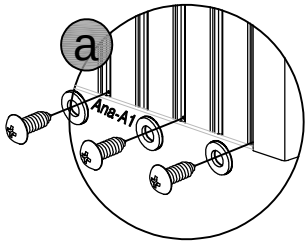

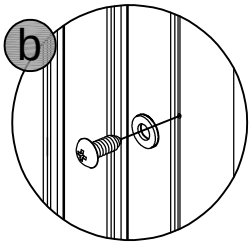

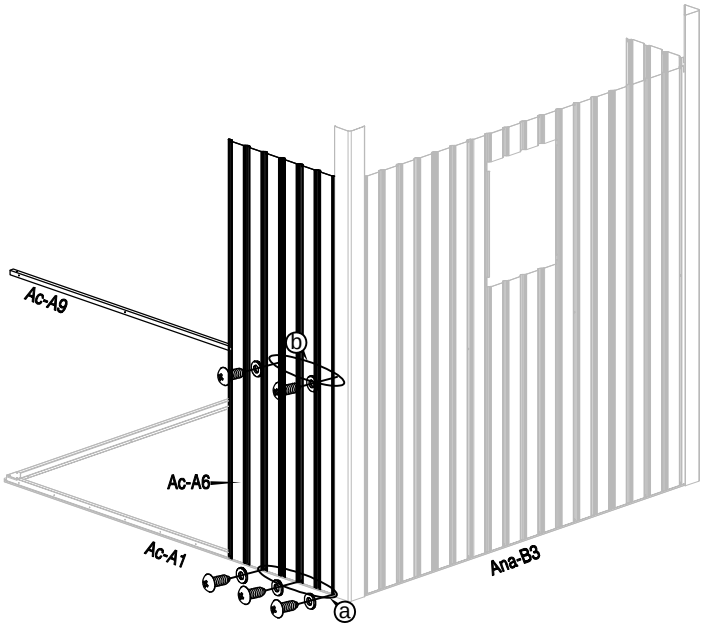

8				
	Ac-A6 x1	Ana-B41 x5	Ana-B40 x5	

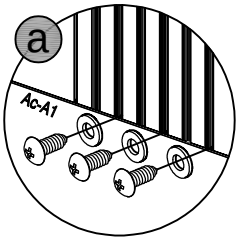

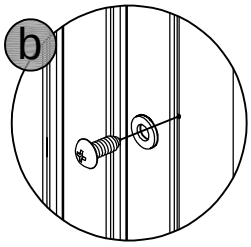

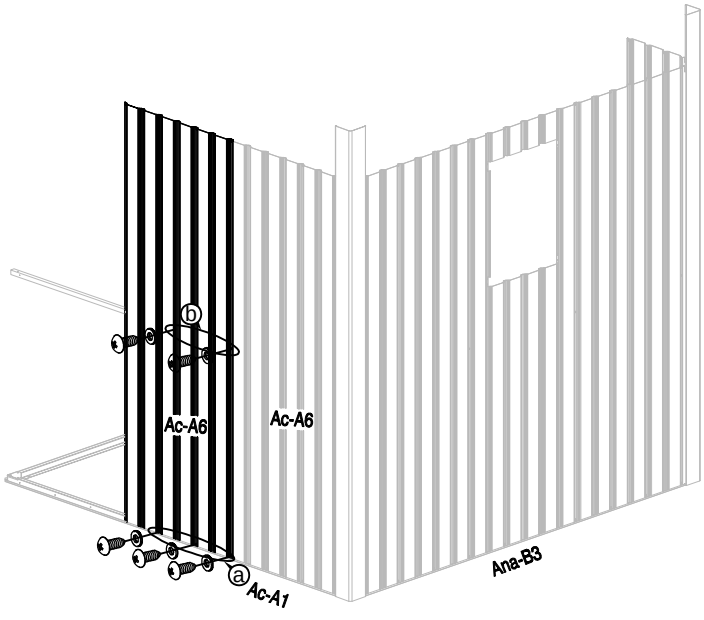

9					
	Ac-A6 x1	Ana-A5 x1	Ana-B41 x7	Ana-B40 x7	

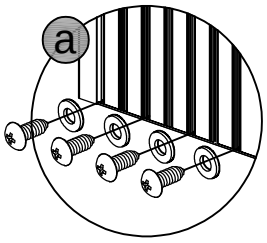

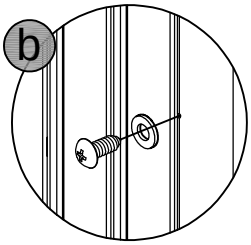

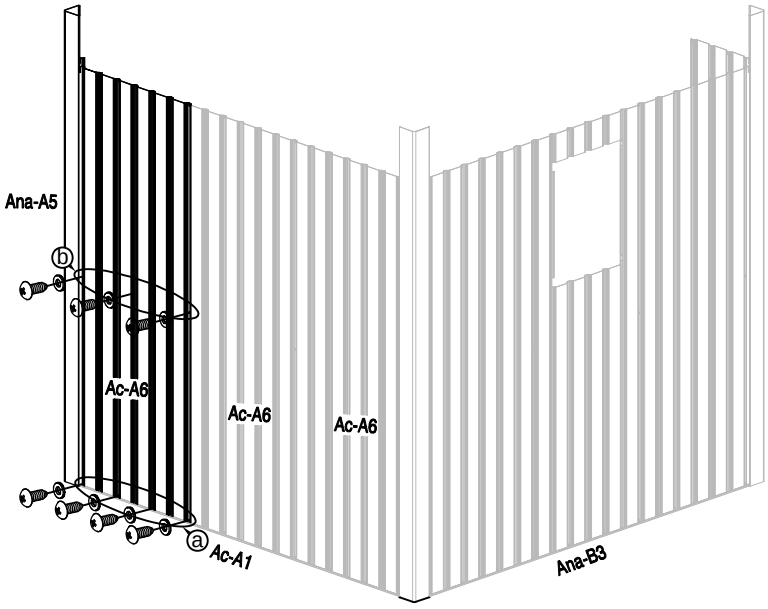

10					
	Ac-A6 x1	Ana-B10 x1	Ana-B41 x5	Ana-A40 x5	

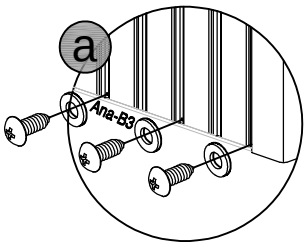

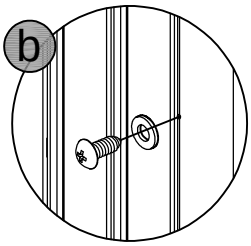

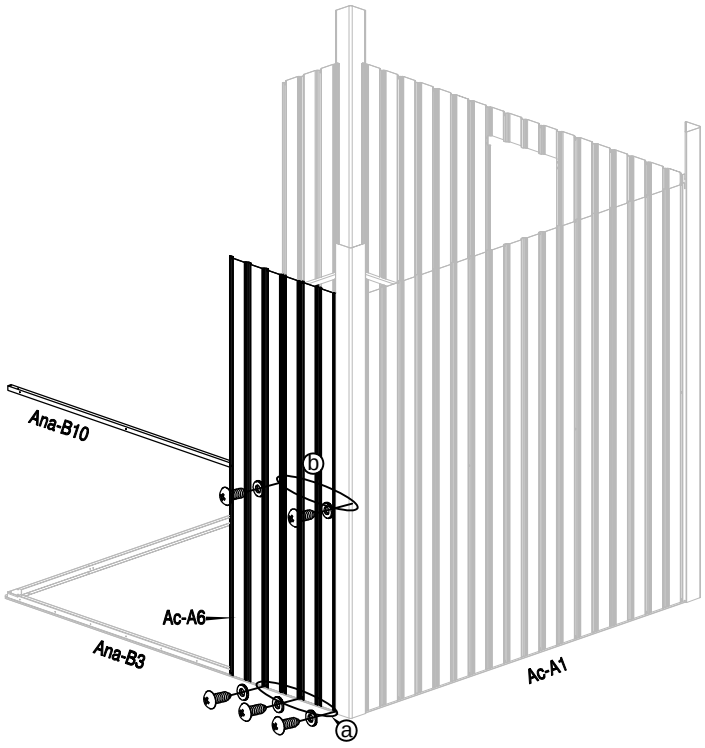

11				
	Ac-A6 x1	Ana-B41 x5	Ana-B40 x5	

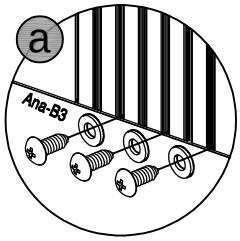

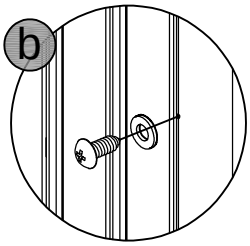

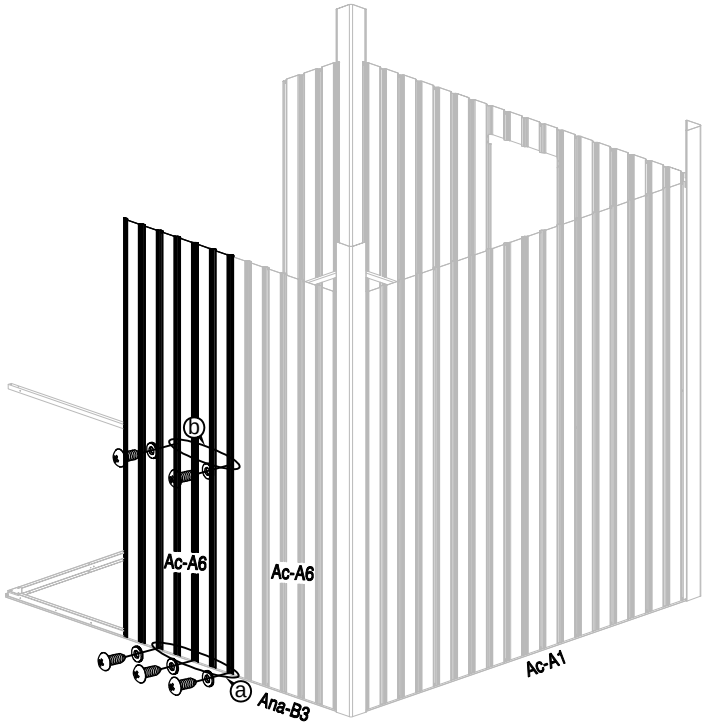

12					
	Ac-A6 x1	Ana-A5 x1	Ana-B41 x7	Ana-B40 x7	

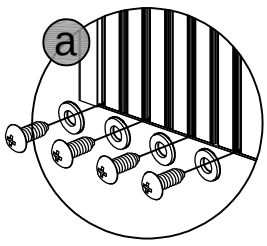

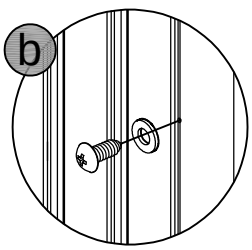

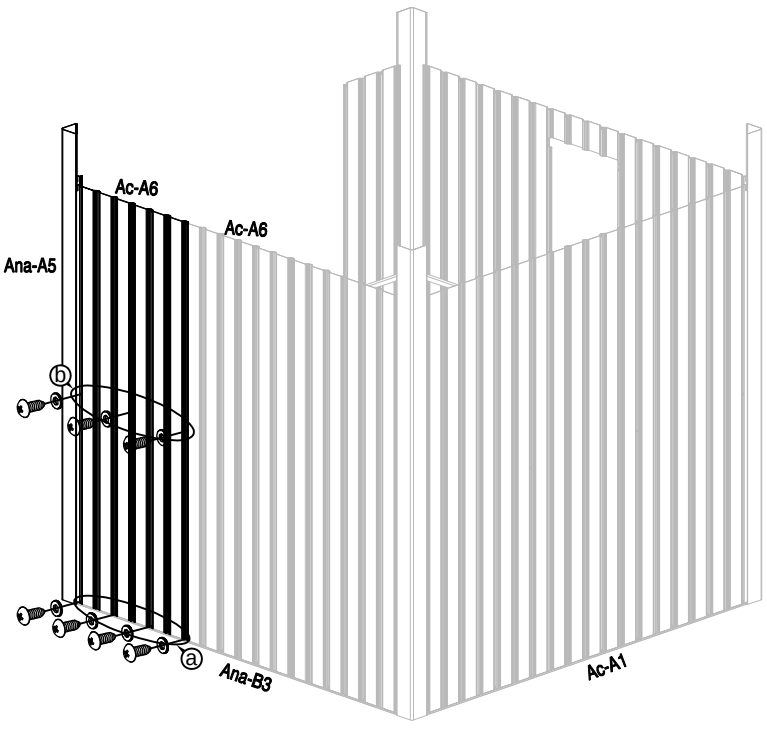

13	Ac-A8 x1	Ac-A11 x1	Ana-B41 x3	Ana-B40 x3	

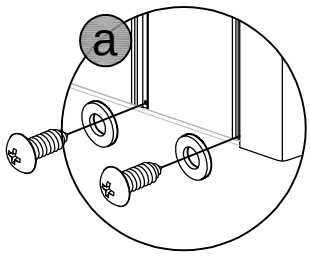

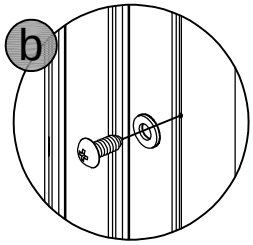

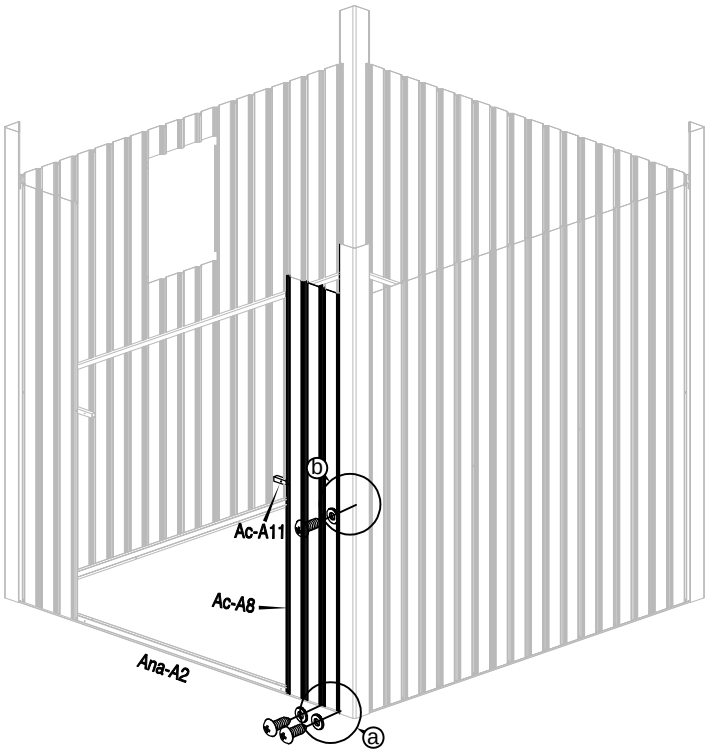

14	Ab-4 x4	Ana-B41 x12	

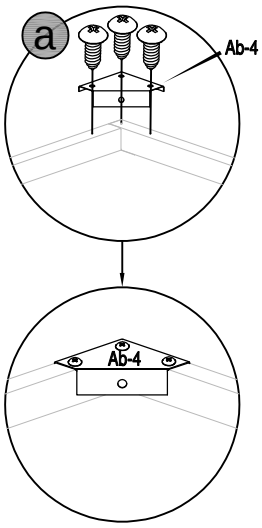

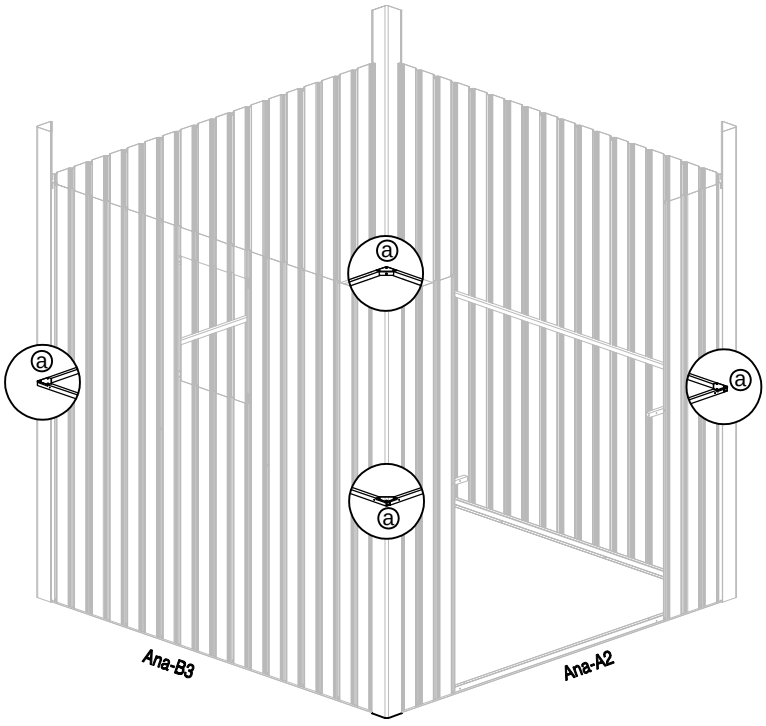

15					
	Ana-A13 x1	Ana-B14 x1	Ana-B41 x14	Ana-B40 x14	

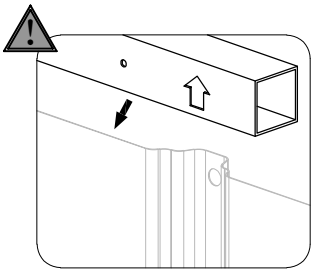

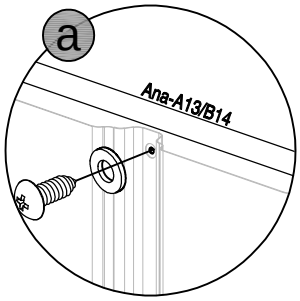

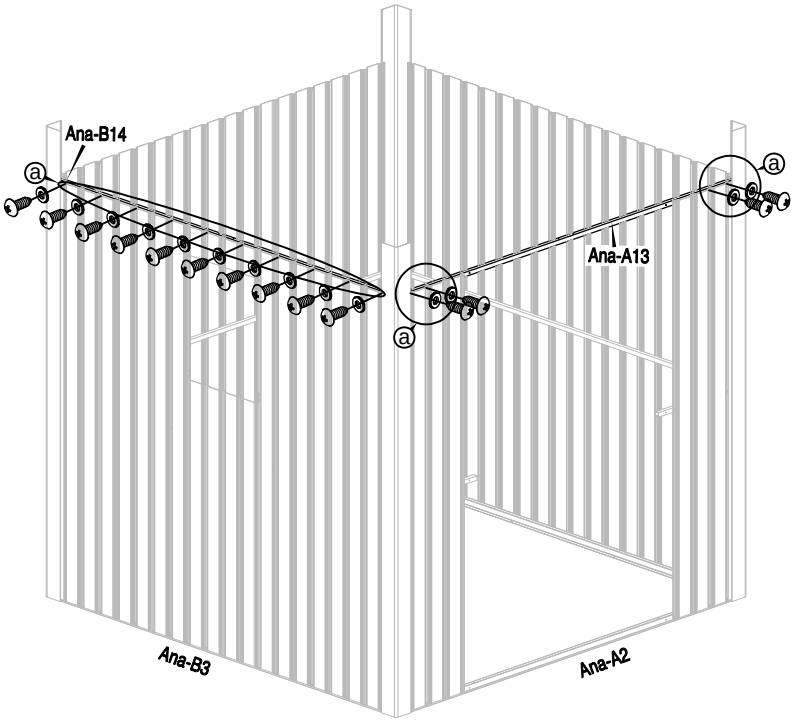

16					
	Ana-A12 x1	Ana-B14 x1	Ana-B41 x20	Ana-B40 x20	

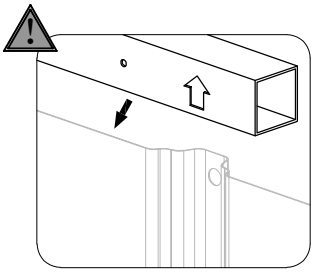

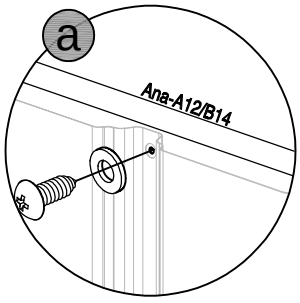

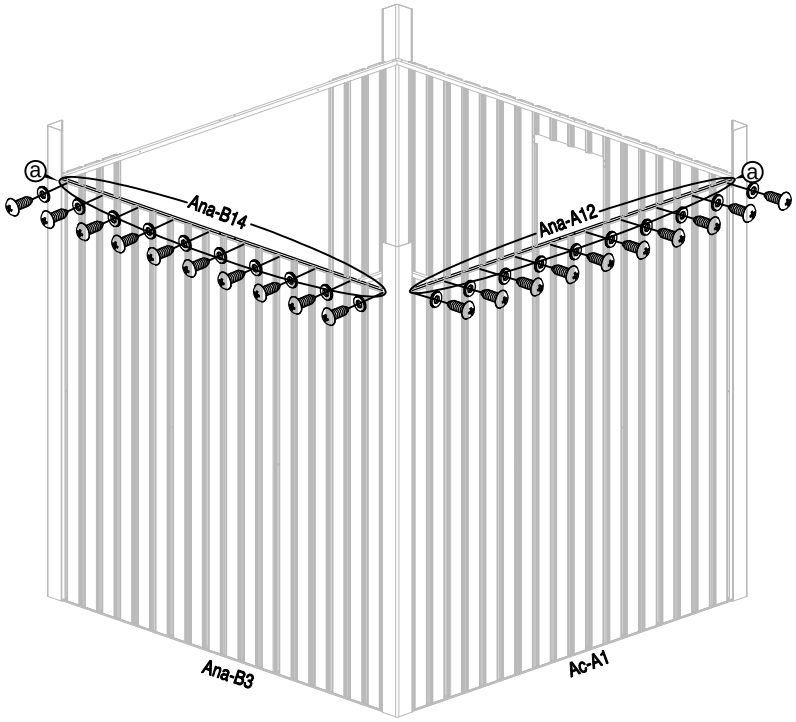

17

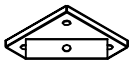

Ab-4 x4



Ana-B41 x12

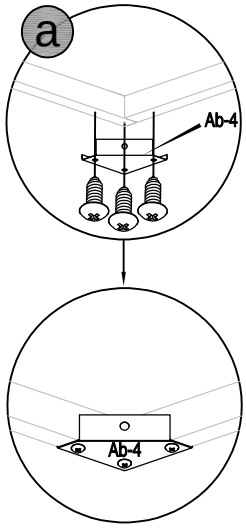

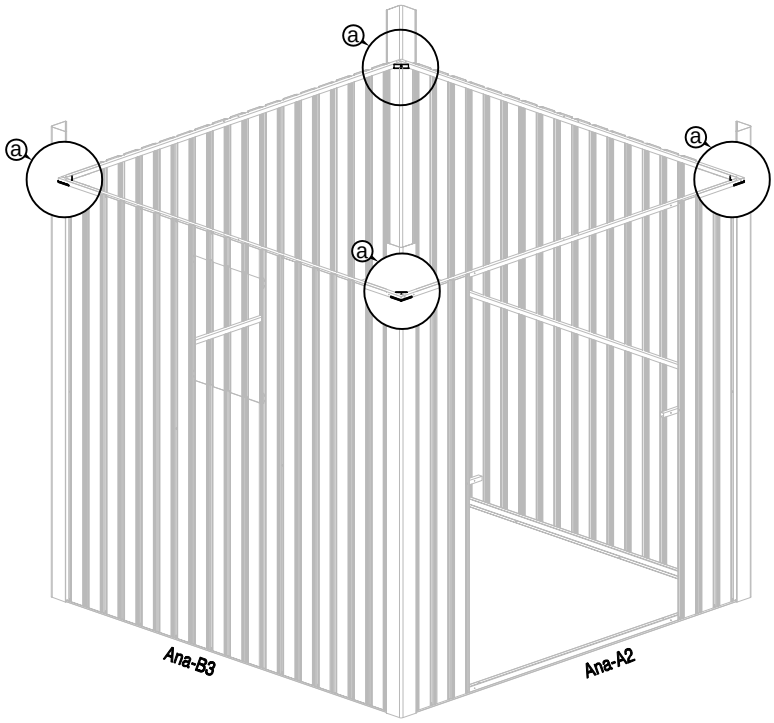

18



Ana-A4 x1



Ana-B41 x4

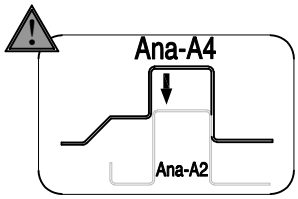

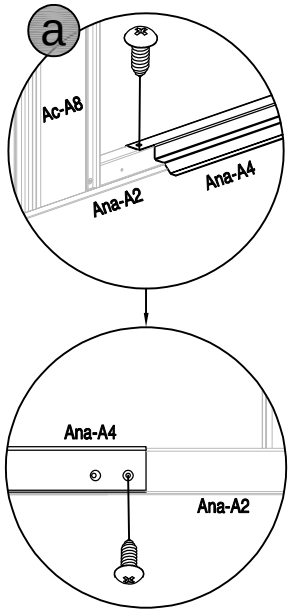

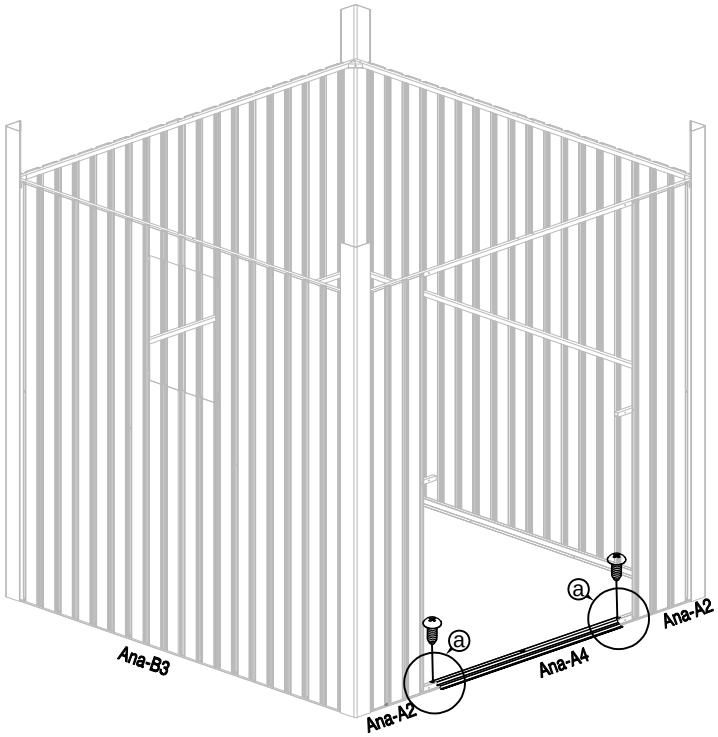

19

Ana-A15 x1

Ana-A15a x1

Ana-B41 x6

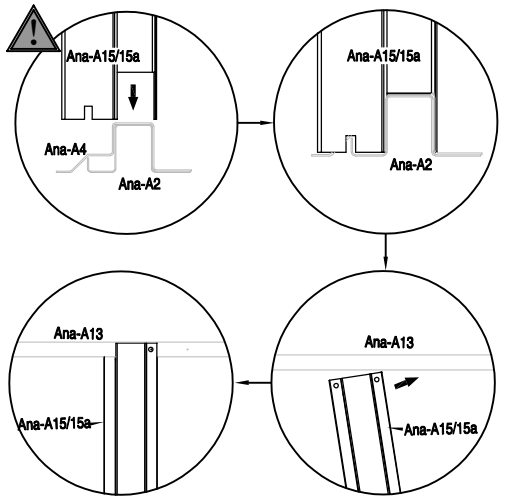

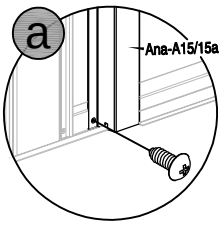

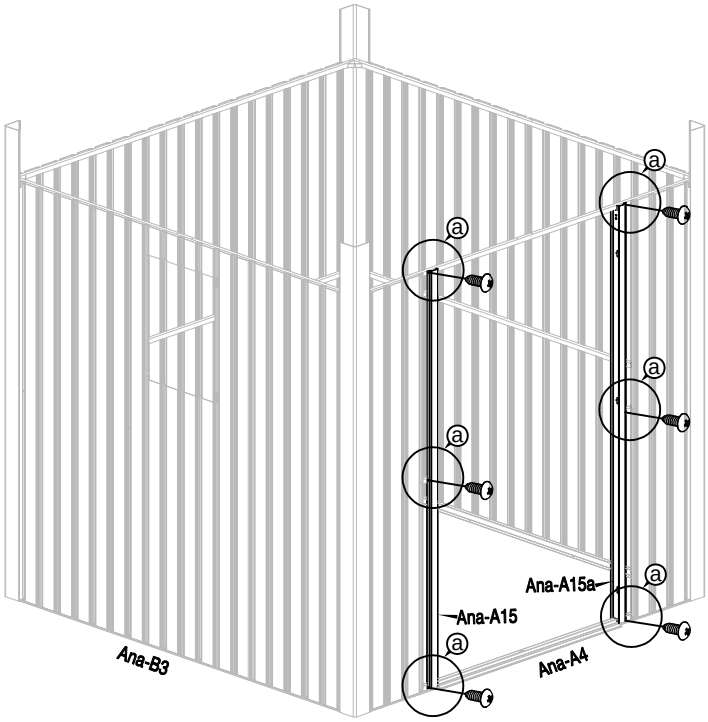

20

Ana-A16 x1

Ana-A16a x1

Ana-B41 x10

Ana-B40 x6

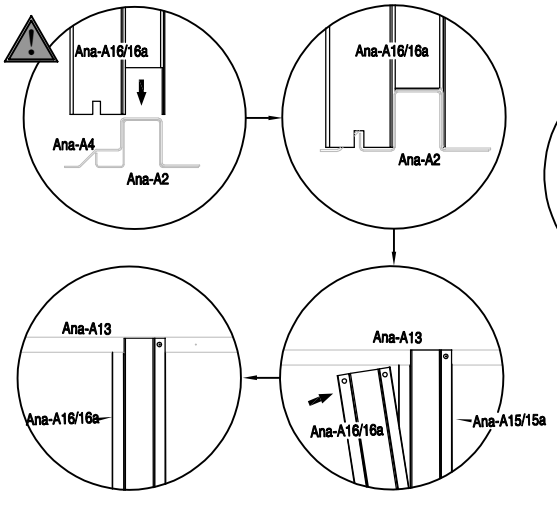

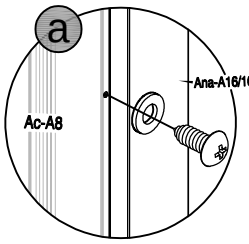

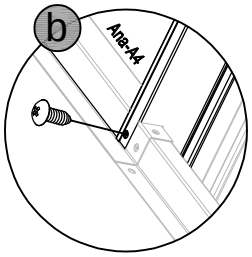

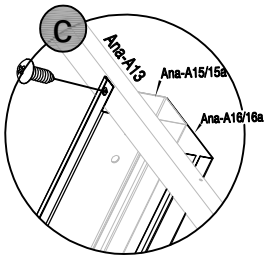

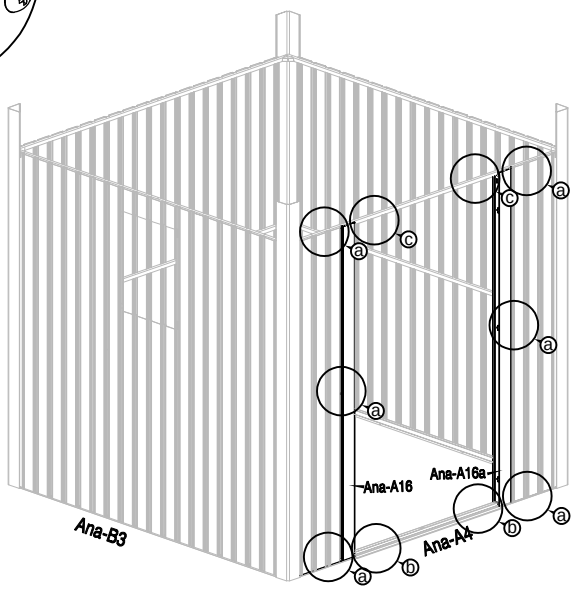

21



Ana-A17 x1



Ana-A44 x4

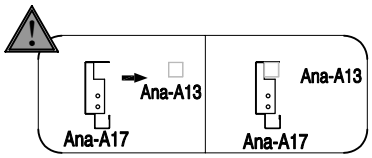

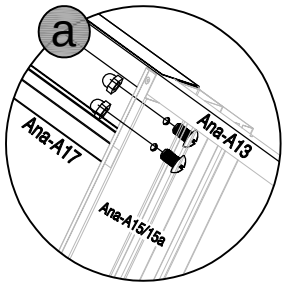

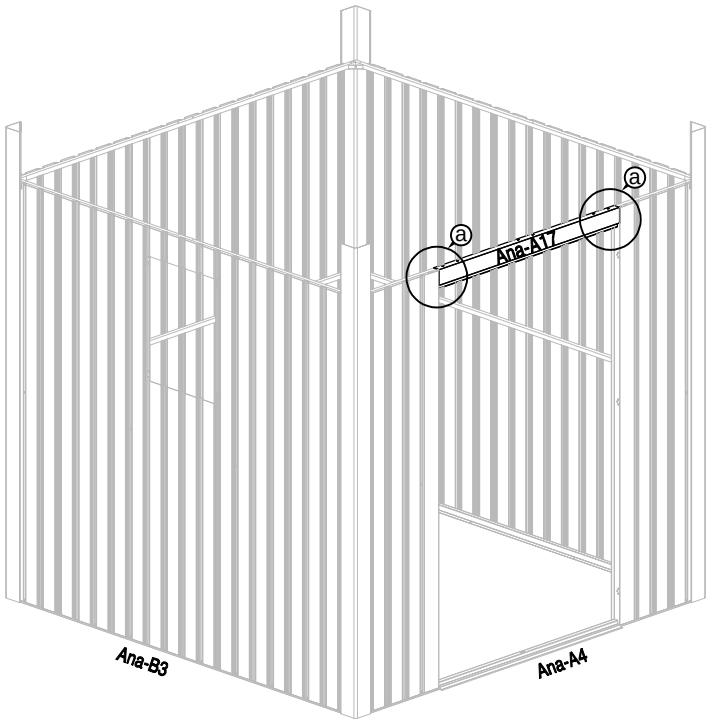

22



Ana-A18 x4

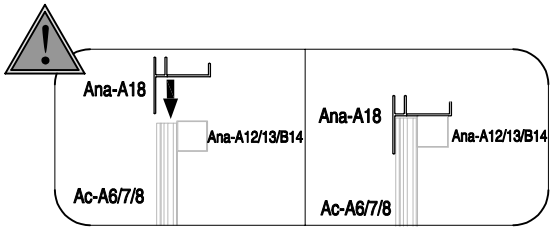

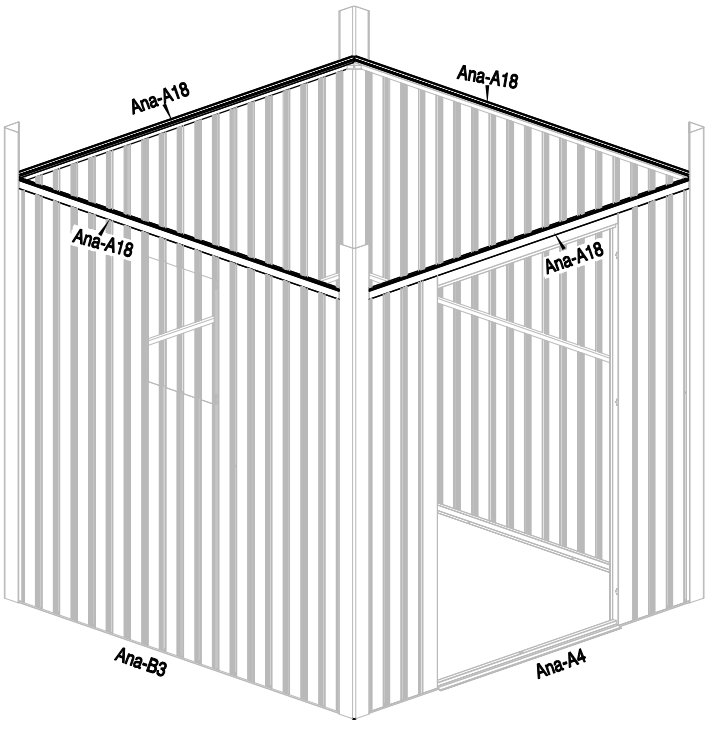

23



Ana-A22b x4



Ana-A22a x4



Ana-B41 x16

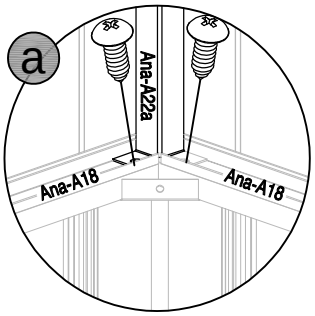

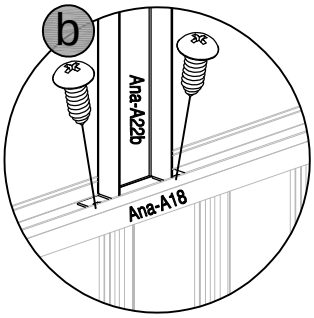

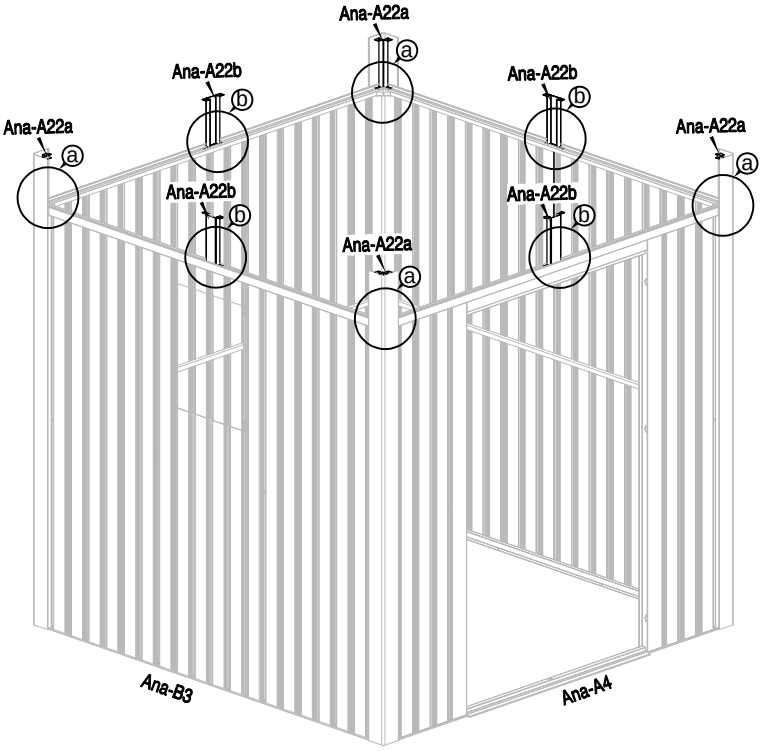

24

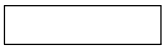

Ana-A36 x3

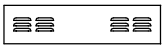

Ana-A38 x1

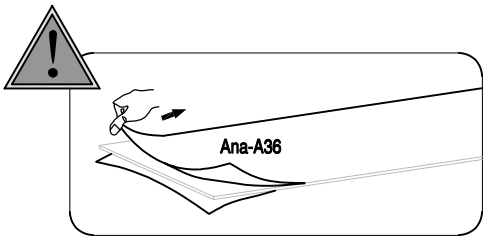

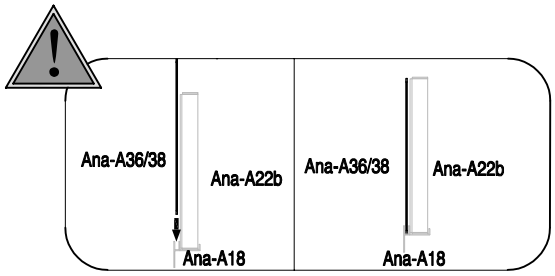

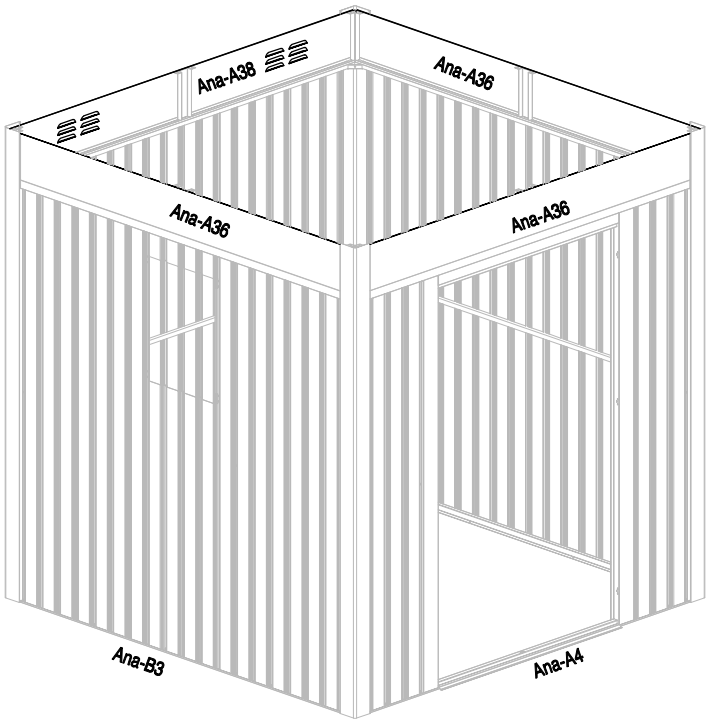

25

Ana-A23 x2

Ana-A18 x2

Ana-B41 x8

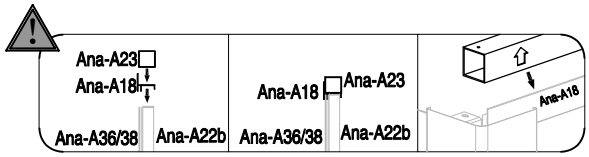

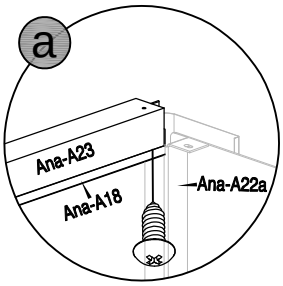

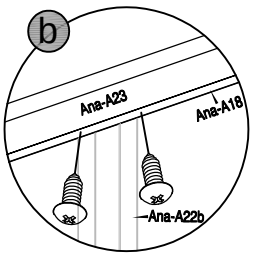

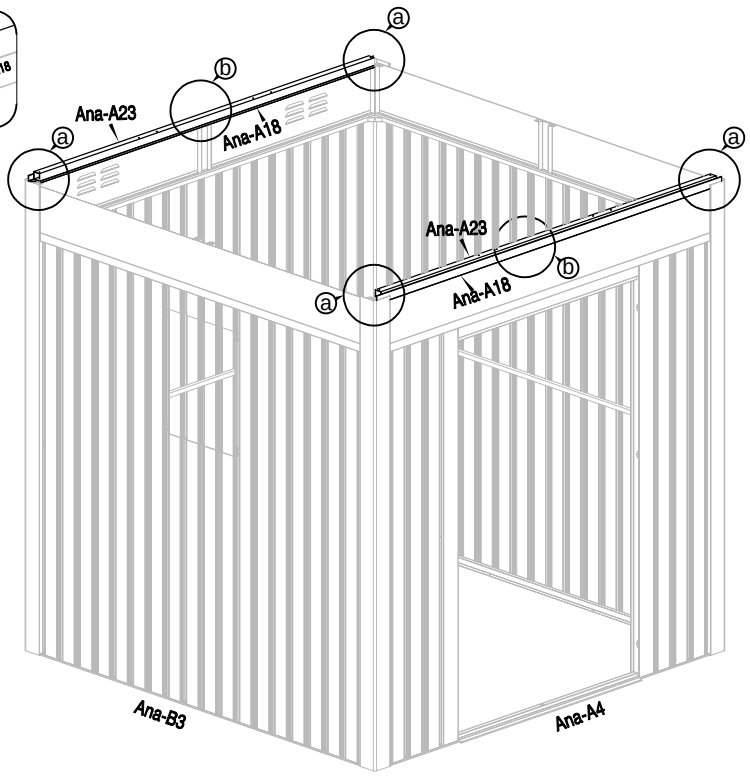

26

Ana-B27 x2

Ana-A18 x2

Ana-B41 x8

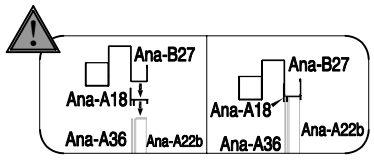

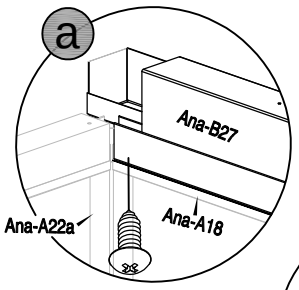

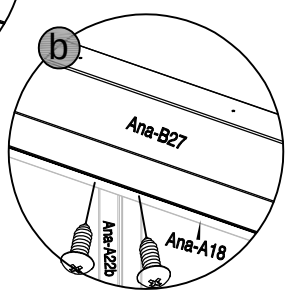

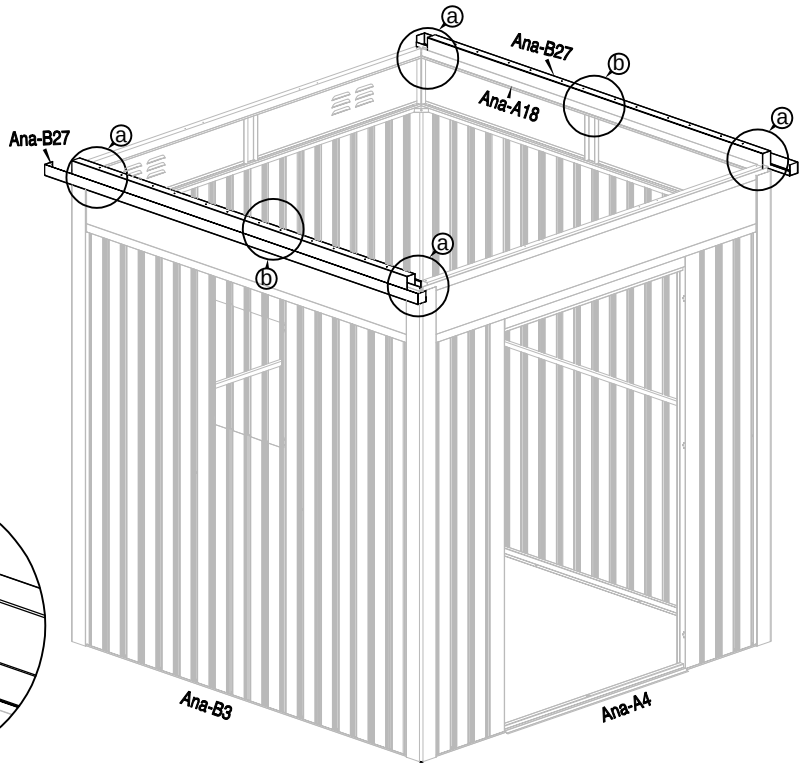

27		
	Ana-A27 x2	Ana-B41 x4

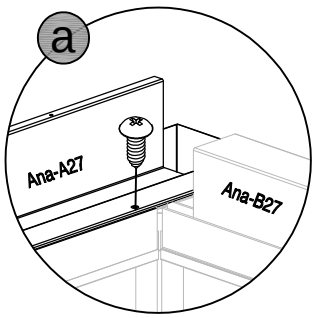

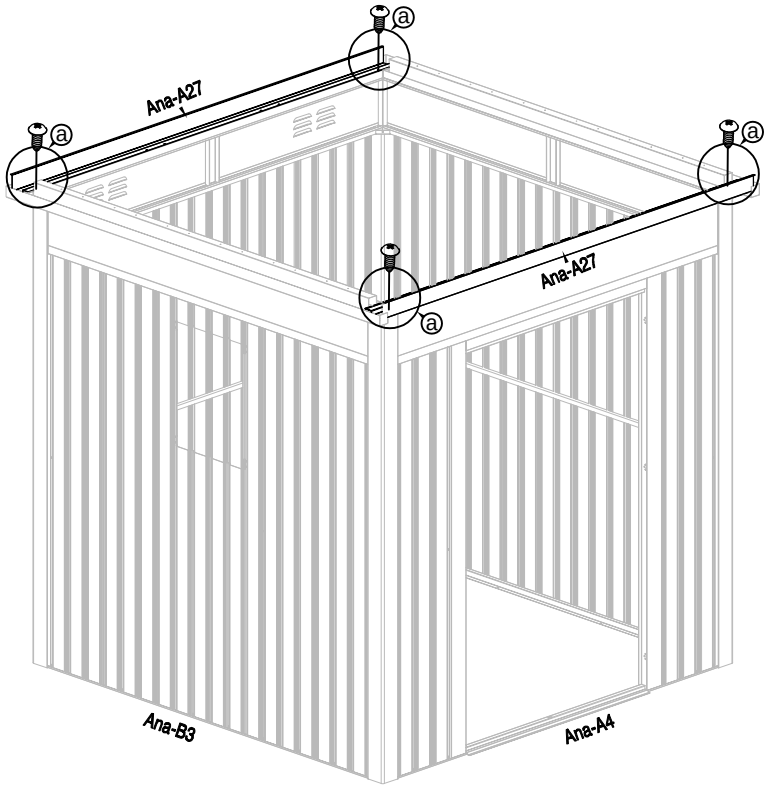

28		
	Ana-B26 x2	Ana-B41 x4

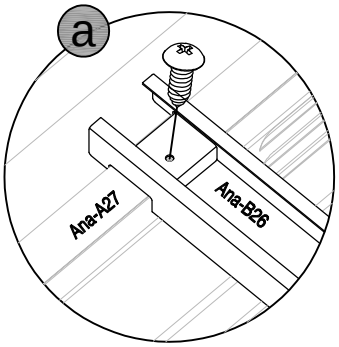

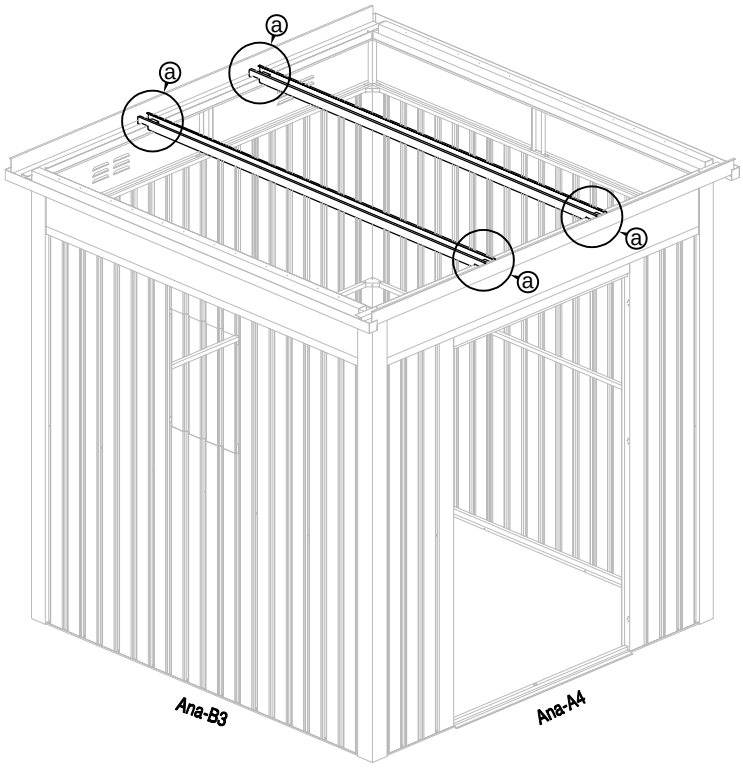

29



Ana-P1 x4

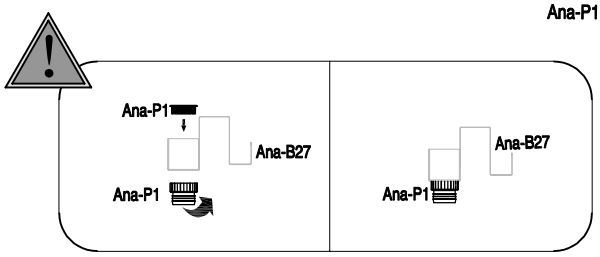

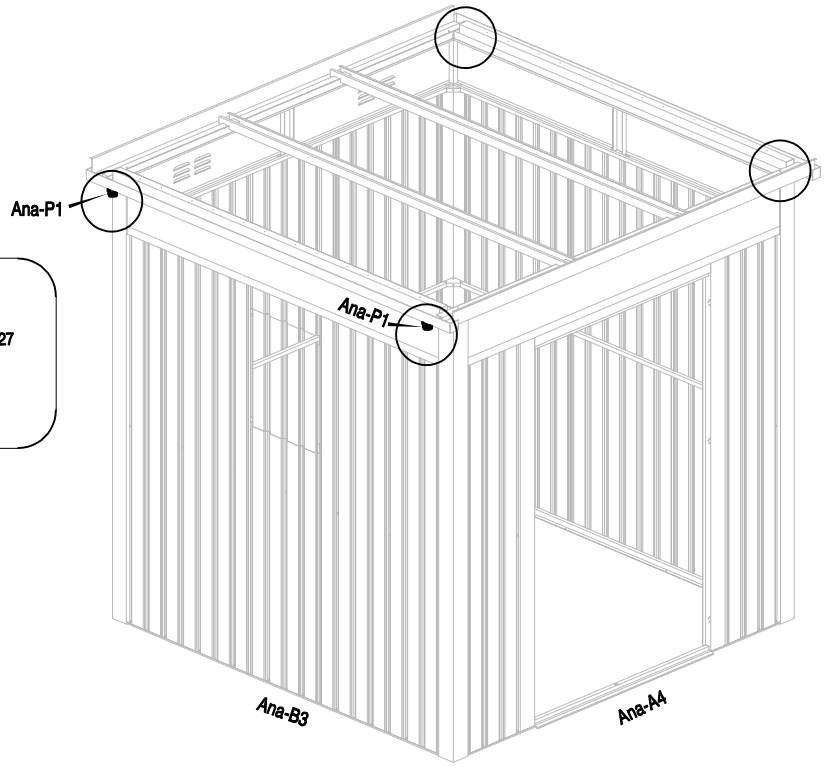

30



Ana-A25 x1



Ana-B41 x2



Ana-B40 x2

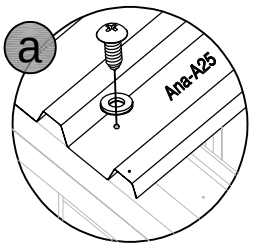

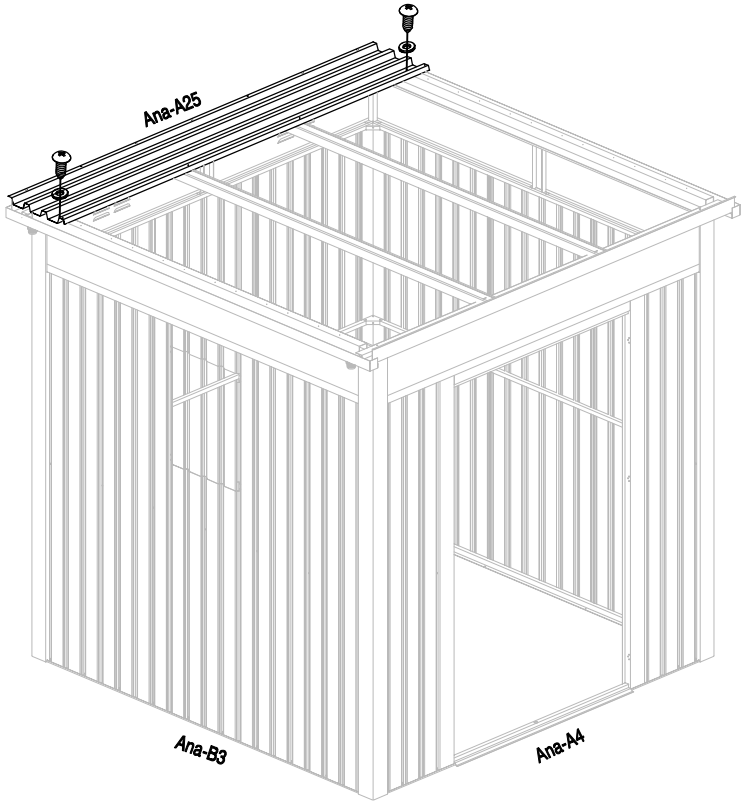

31				
	Ana-A24 x2	Ana-B41 x12	Ana-B40 x12	

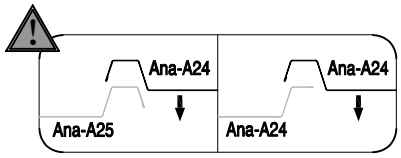

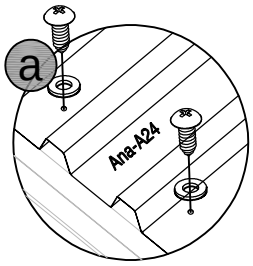

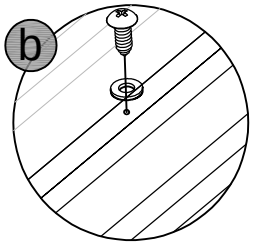

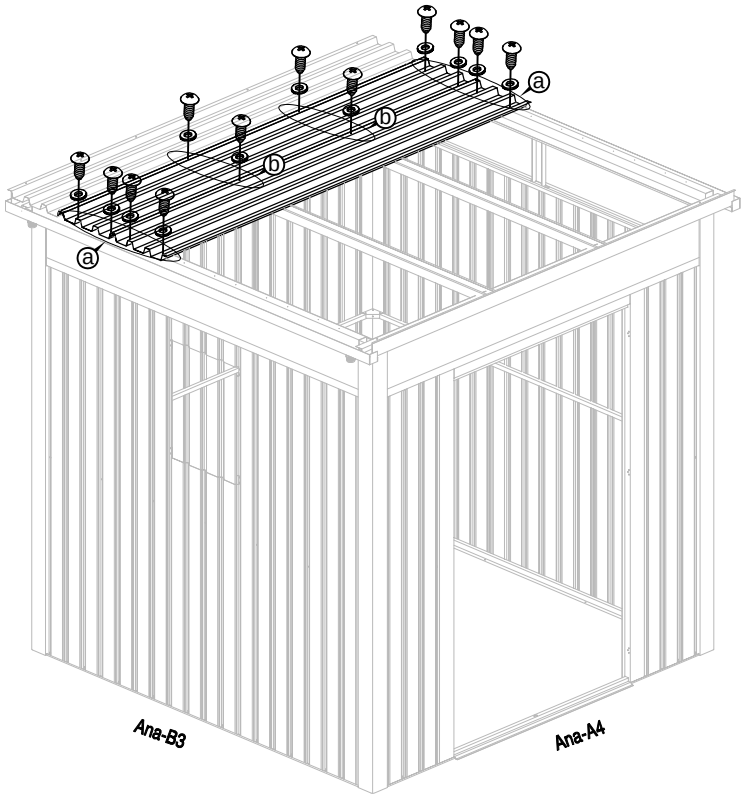

32				
	Ana-A24 x3	Ana-B41 x18	Ana-B40 x18	

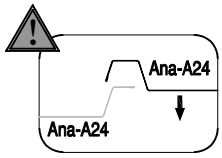

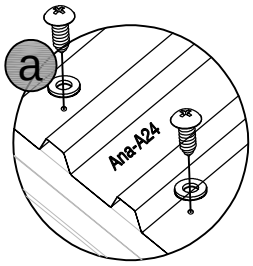

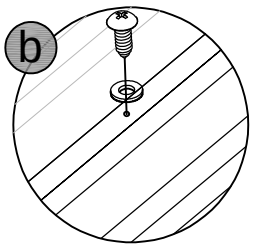

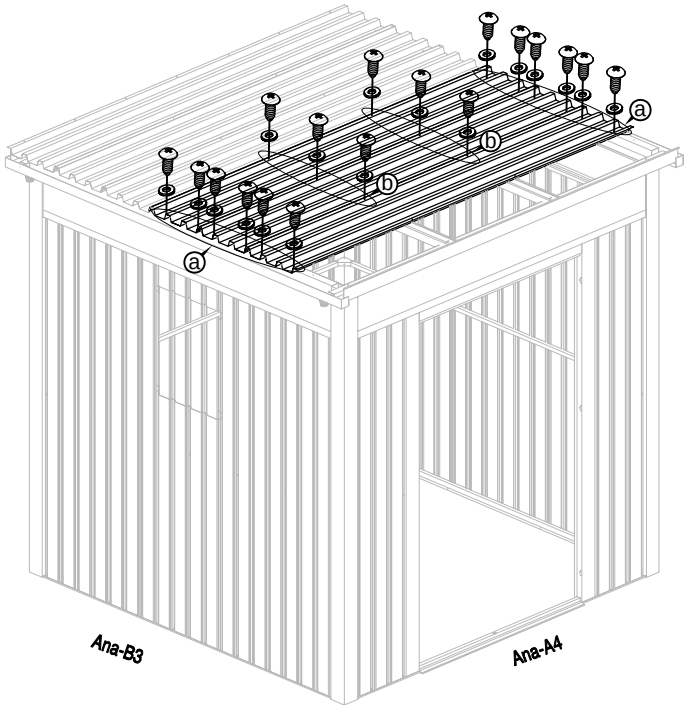

33				
	Ana-A25a x1	Ana-B41 x4	Ana-B40 x4	

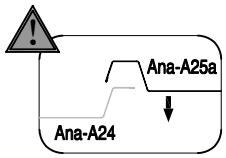

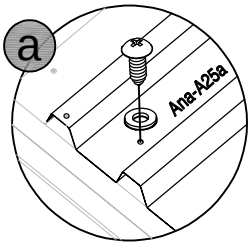

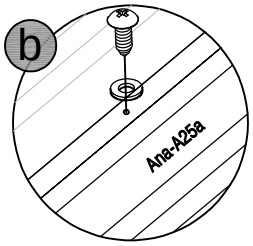

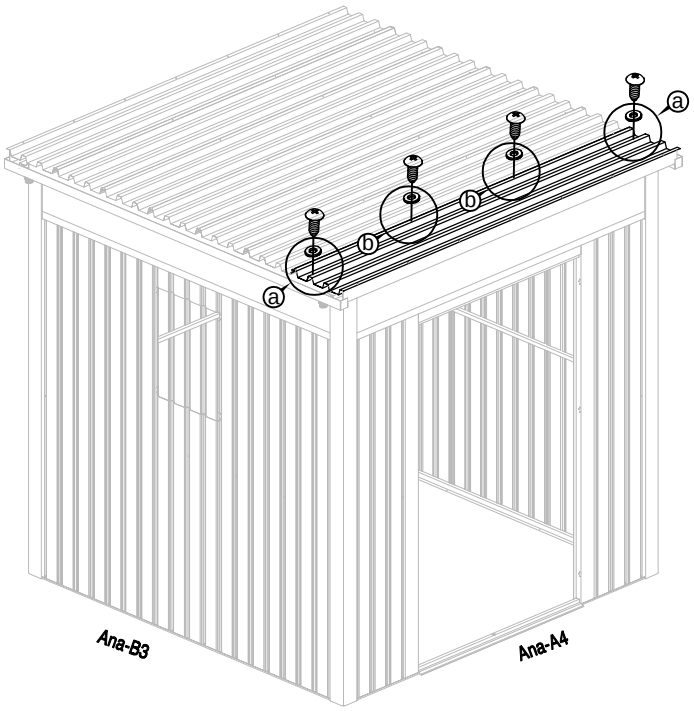

34					
	Ana-A28 x2	Ana-B28 x2	Ana-B41 x26	Ana-B40 x26	

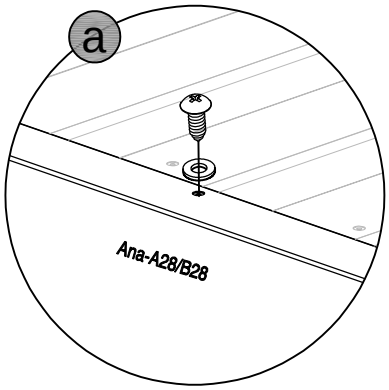

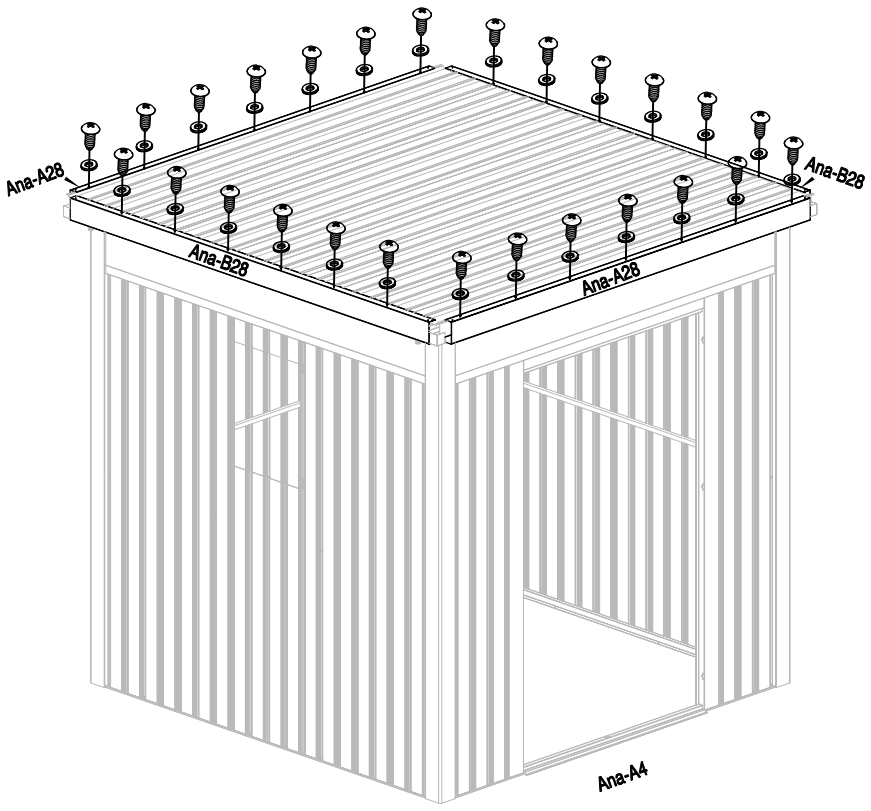

35



Ana-P2 x4



Ana-B41 x16

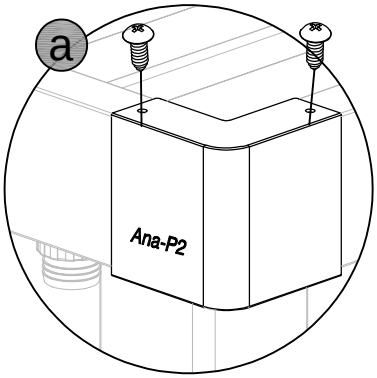

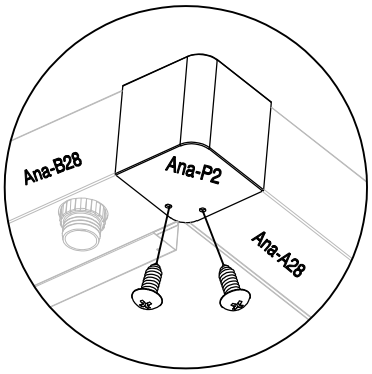

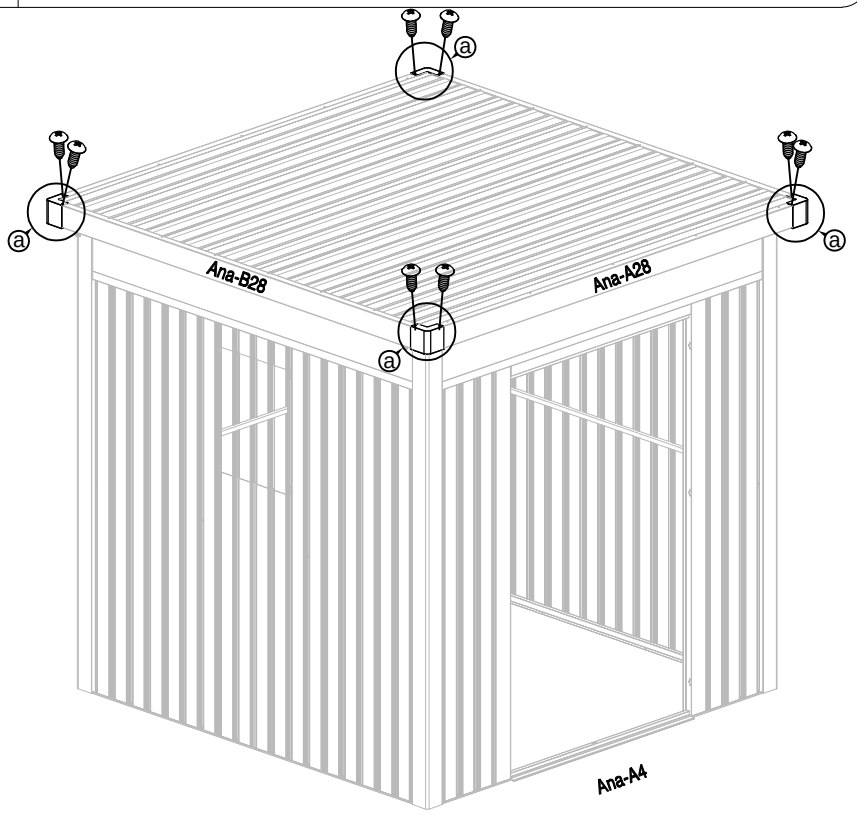

36



Ab-50 x6



Ana-A43 x18

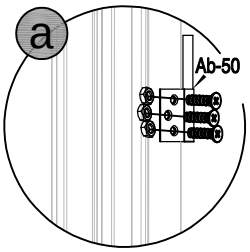

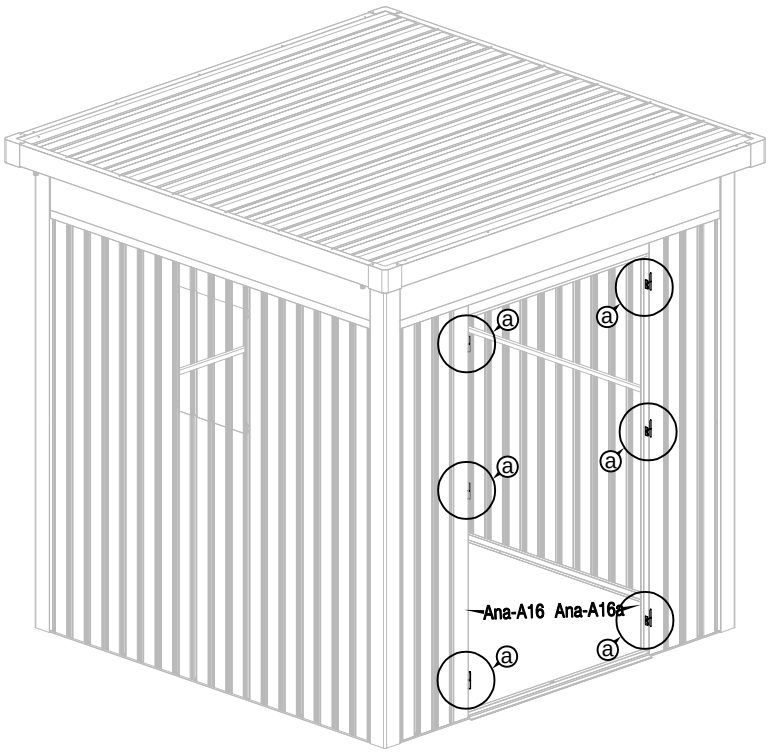

37							
	Ac-A29 x1	Ac-A29a x1	Ana-54 x1	Ana-55 x1	Ana-56 x1	Ana-57 x1	Ana-58 x3

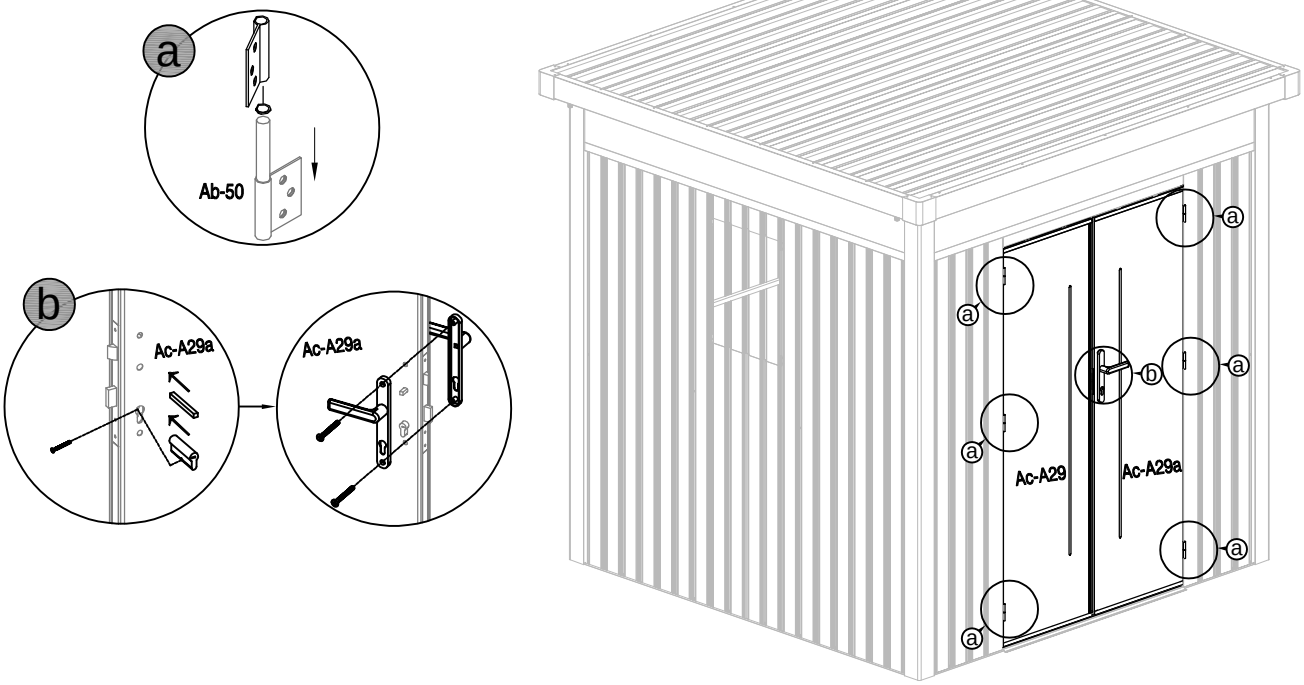

38		
	Ana-P6 x1	Ana-B41 x4

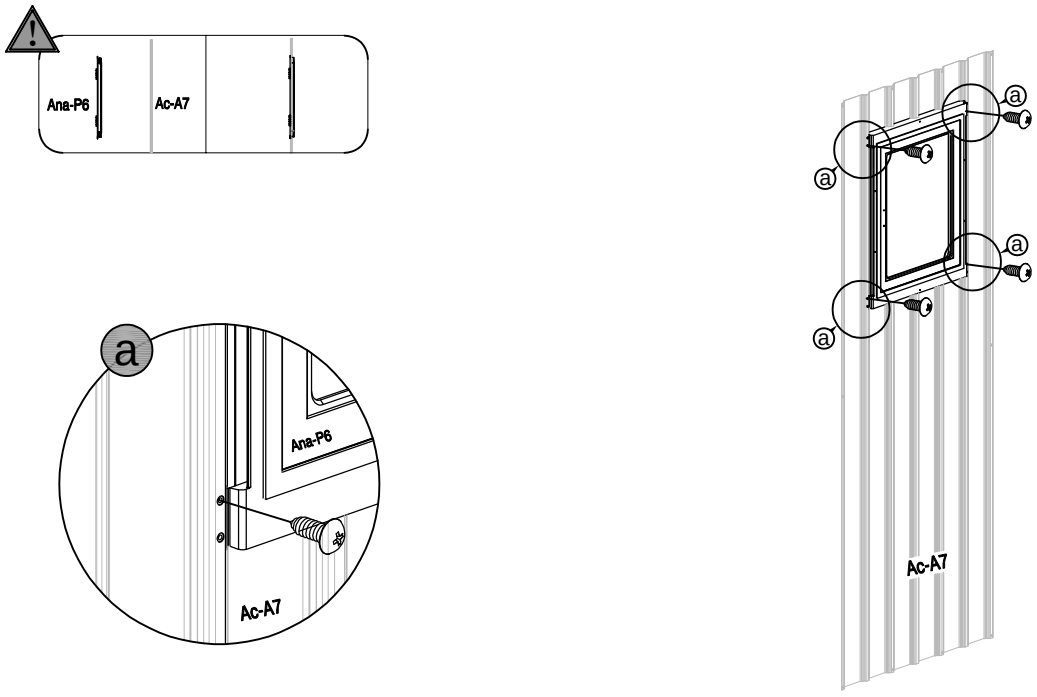

39



Ana-P7 x1



Ana-B41 x10

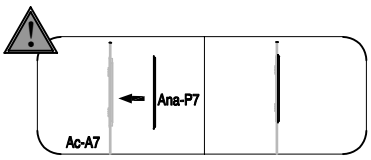

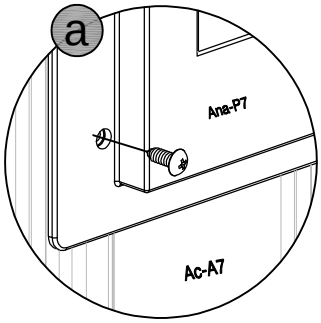

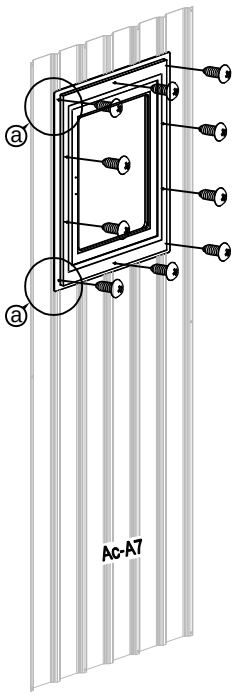

40



Ana-P8 x1



Ana-A42 x2

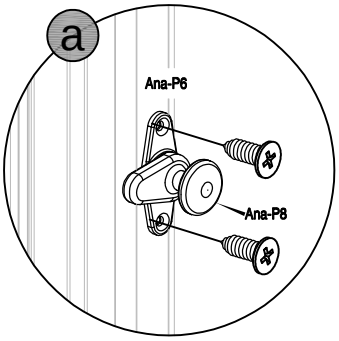

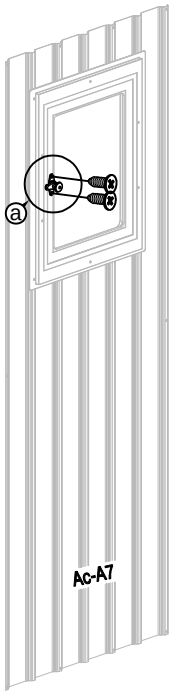

41



Ana-B37 x16.5M

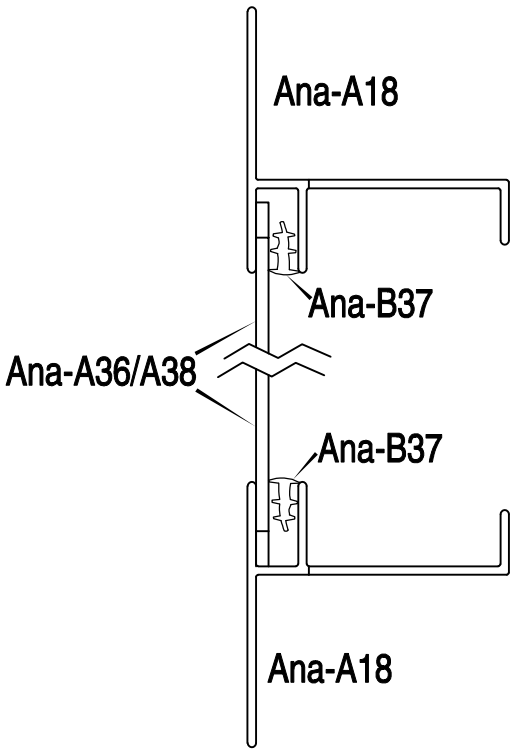

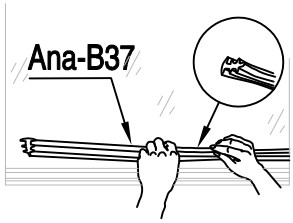

42



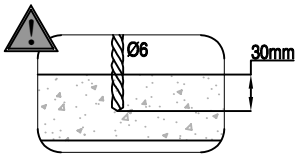

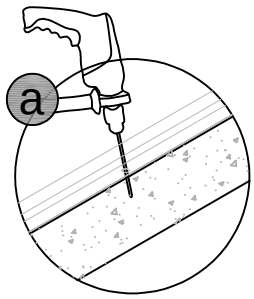

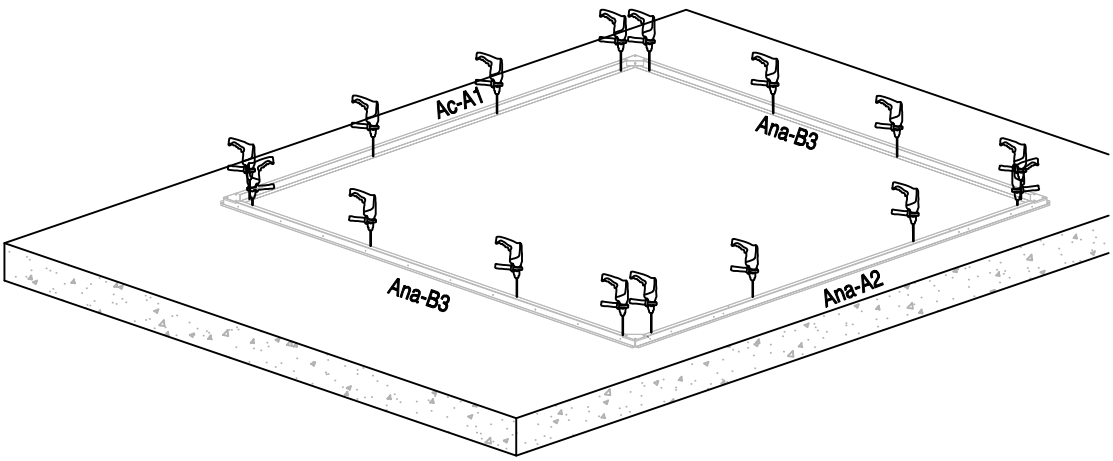

43

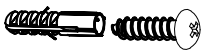

Ana-B45 x16

