Anna-C

OWNER'S MANUAL /
Instructions for Assembly

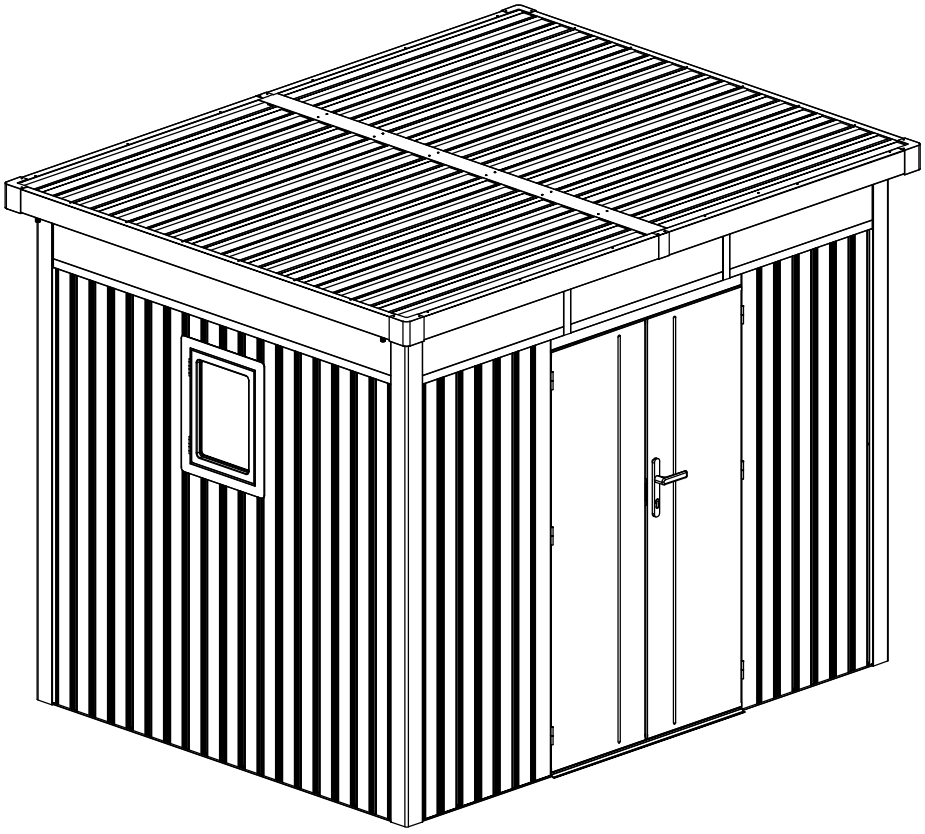



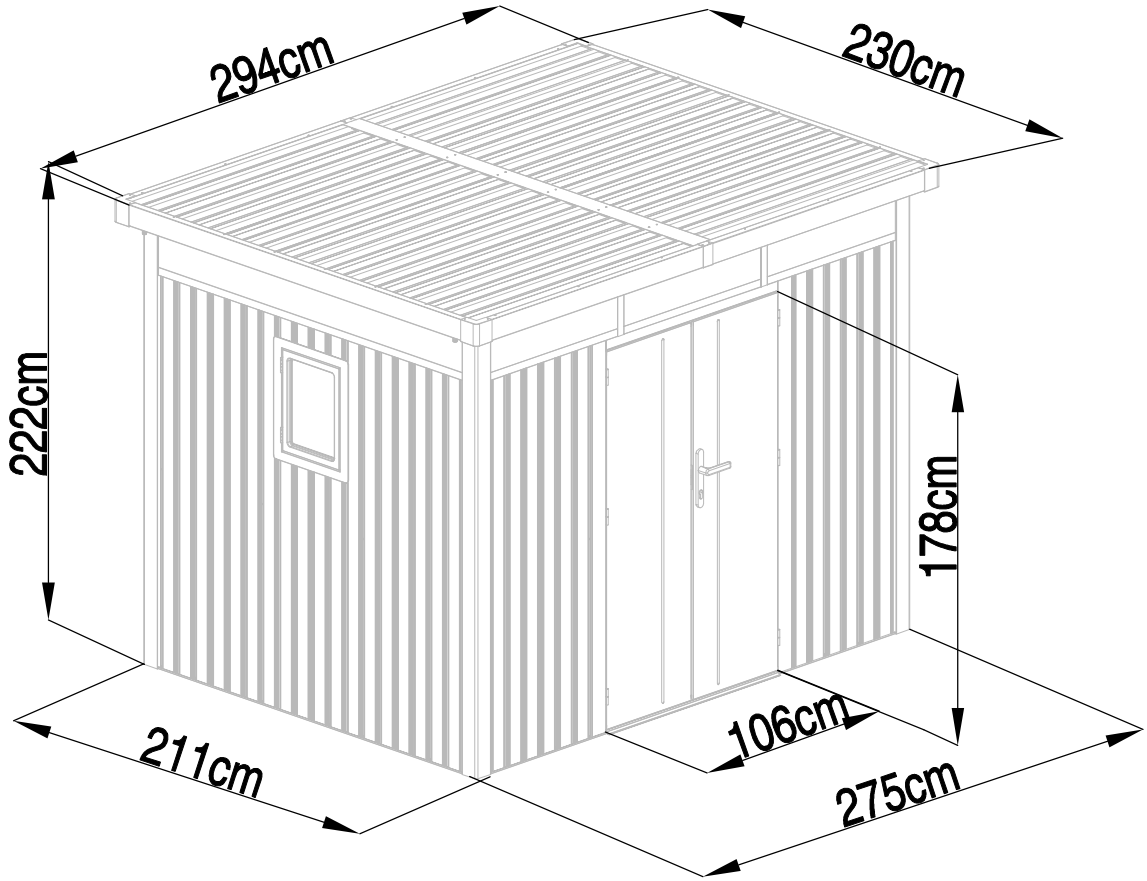

Area of installation requirement:

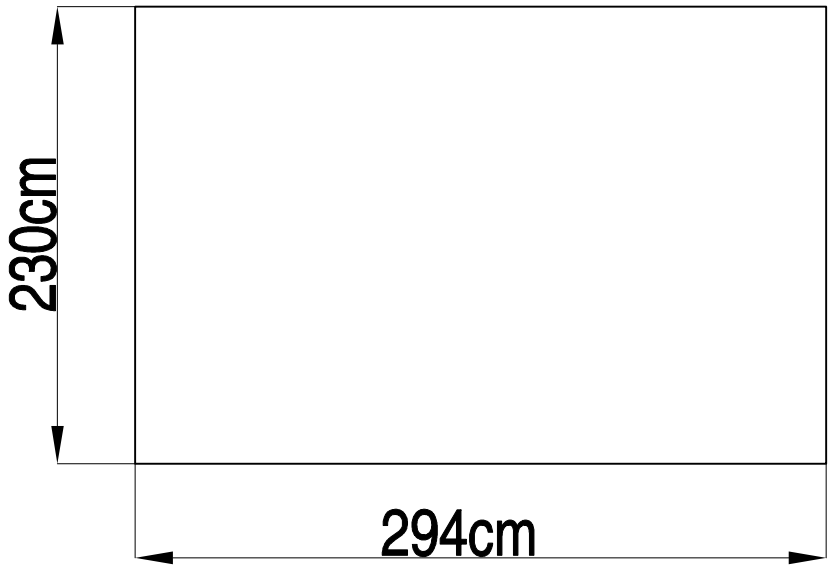

Anna-C:

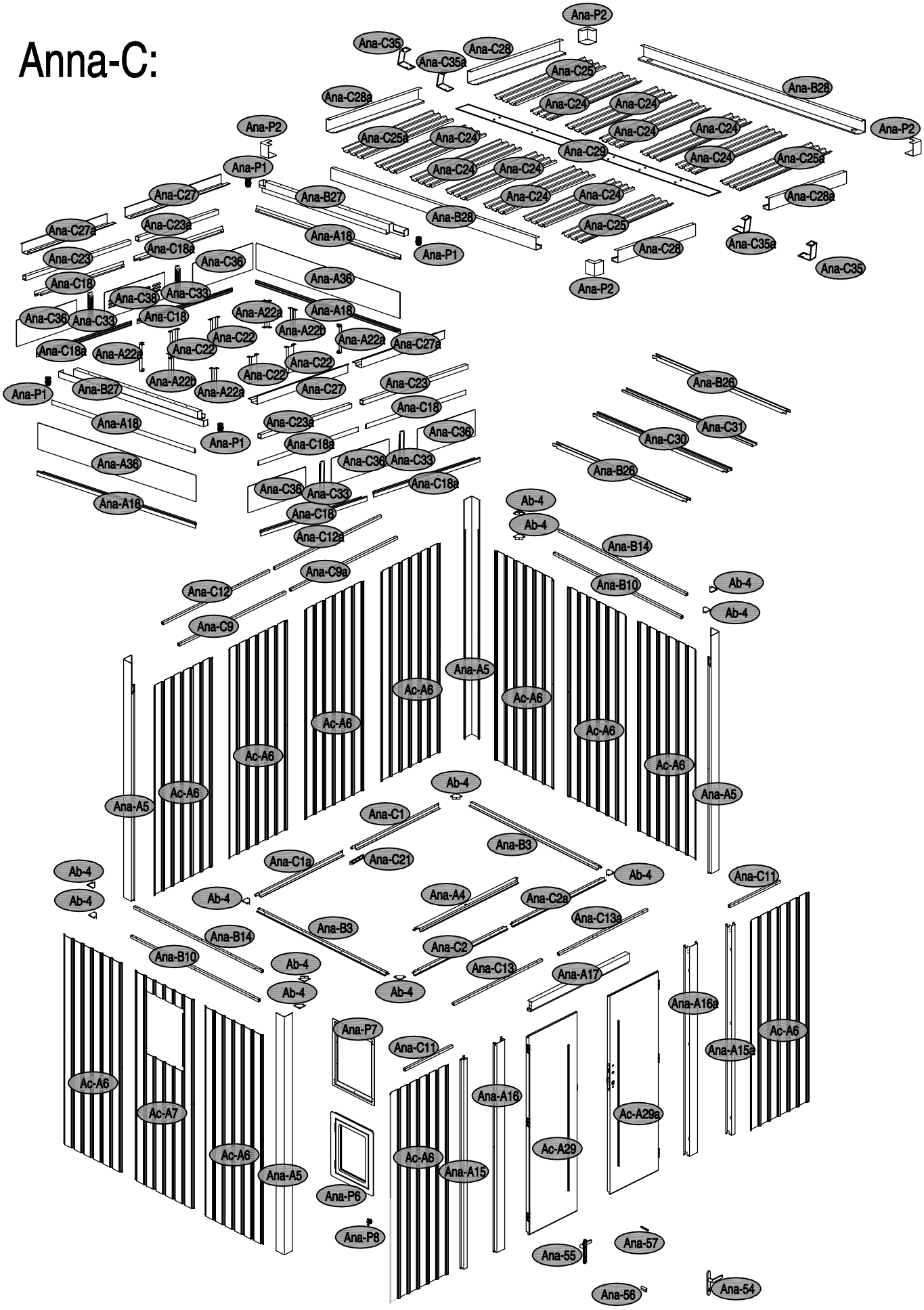
Ana-P2
Ana-C35
Ana-C35a
Ana-C28
Ana-C25
Ana-B28
Ana-C28a
Ana-C24
Ana-C25a
Ana-C29
Ana-P1
Ana-C27
Ana-B27
Ana-C27a
Ana-C23a
Ana-C18a
Ana-A18
Ana-C23
Ana-C36
Ana-C18
Ana-A36
Ana-C38
Ana-C33
Ana-A22a
Ana-A22b
Ana-C22
Ana-C27a
Ana-C23
Ana-C18
Ana-C36
Ana-C33
Ana-C12a
Ana-C9a
Ana-C12
Ana-C9
Ana-B26
Ana-C31
Ana-C30
Ana-B14
Ana-B10
Ab-4
Ana-A5
Ac-A6
Ana-C1
Ana-B3
Ana-C1a
Ana-C21
Ana-A4
Ana-C2a
Ana-C11
Ana-C13a
Ana-C2
Ana-C13
Ana-A17
Ana-A16a
Ana-A15a
Ana-P7
Ana-A16
Ana-A29a
Ana-A29
Ana-A15
Ana-P6
Ana-P8
Ana-55
Ana-57
Ana-56
Ana-54
Ac-A7

NO.	IMAGE	mm	QTY
UNDER			
Ana-C1	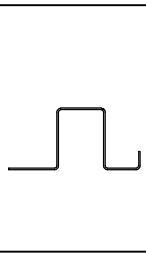	1458	x1
Ana-C1a		1245	x1
Ana-C2		1371.5	x1
Ana-C2a		1331.5	x1
Ana-B3		2064	x2
Ana-A4		1130	x1
MIDDLE			
Ana-A5		2124	x4
Ac-A6		1900	x11
Ac-A7		1900	x1
Ana-C9	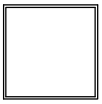	1521.5	x1
Ana-C9a		1191.5	x1
Ana-B10		2063	x2
Ana-C11		783.5	x2
Ana-C12		1521.5	x1
Ana-C12a		1191.5	x1
Ana-C13		1521.5	x1
Ana-C13a		1191.5	x1
Ana-B14		2063	x2
Ana-A15		1900	x1
Ana-A15a		1900	x1
Ana-A16	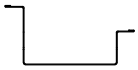	1900	x1
Ana-A16a		1900	x1
Ana-A17		1087.5	x1
Ana-A18		2077	x4
Ana-C18		904.5	x4
Ana-C18a		1811.5	x4
Ana-C21		190	x1
Ana-A22b	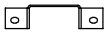	223	x2
Ana-C22		223	x4
Ana-A22a		223	x4
Ana-C23		1518	x2
Ana-C23a		1188	x2
Ana-B26		2142.5	x2
Ana-A36	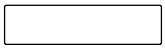	2077	x2
Ana-C36		890	x5
Ana-C38	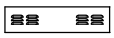	890	x1
Ana-C27		1501.5	x2
Ana-C27a		1330	x2

NO.	IMAGE	mm	QTY
Ana-B27		2248	x2
Ana-C30		2142.5	x1
Ana-C31		2142.5	x1
Ana-C33		272	x4
DOOR			
Ac-A29		1804	x1
Ac-A29a		1804	x1
TOP			
Ana-C24		1439.5	x10
Ana-C25		1439.5	x2
Ana-C25a		1439.5	x2
Ana-C28		1399.5	x2
Ana-C28a		1399.5	x2
Ana-B28		2159.5	x2
Ana-C29		2246.5	x1
Ana-C35			x2
Ana-C35a			x2
ANNEX			
Ab-4			x12
Ana-C37			22M
Ana-P1			x4
Ana-P2			x4
Ana-P6			x1
Ana-P7			x1
Ana-P8			x1
Ab-50			x6
Ana-54			x1
Ana-55			x1
Ana-56			x1
Ana-57			x1
Ana-58		M5x45	x3
Ana-C40			x219
Ana-C41		ST4x10	x367
Ana-A42		ST4x10	x2
Ana-A43		M4x10	x18
Ana-A44		M5x8	x4
Ana-C45		ST4x25	x17
Ana-C46		M6x12	x4
Ana-C47		ST4x16	x12
Ana-C43		M4x10	x12

1							
	Ana-C1 x1	Ana-C1a x1	Ana-C2 x1	Ana-C2a x1	Ana-B3 x2	Ana-C21 x1	Ana-C41 x8

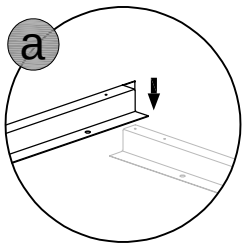

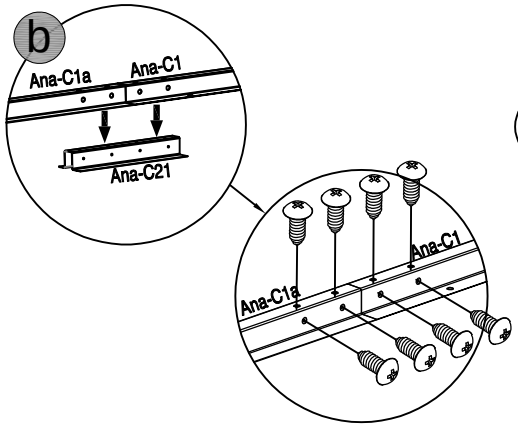

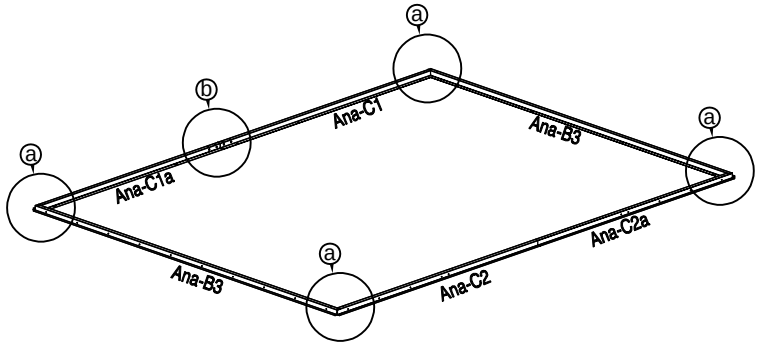

2		
	Ab-4 x4	Ana-C41 x12

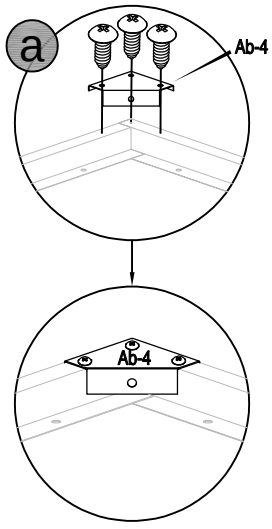

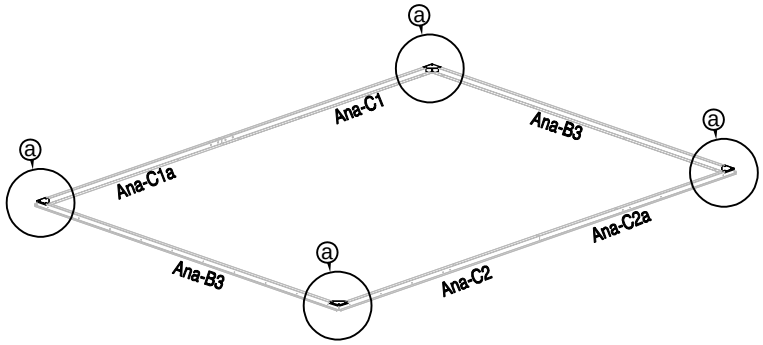

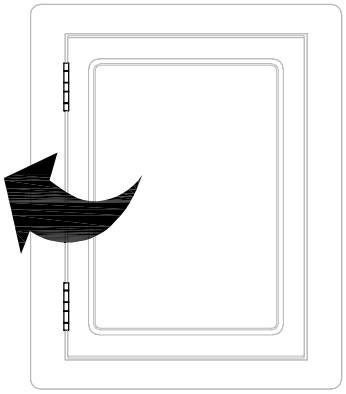

Or

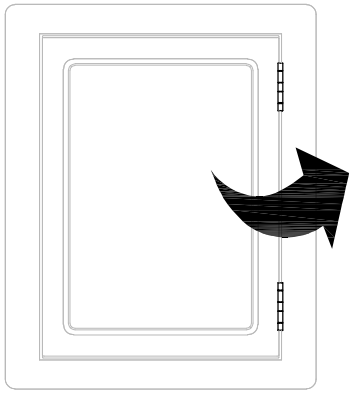

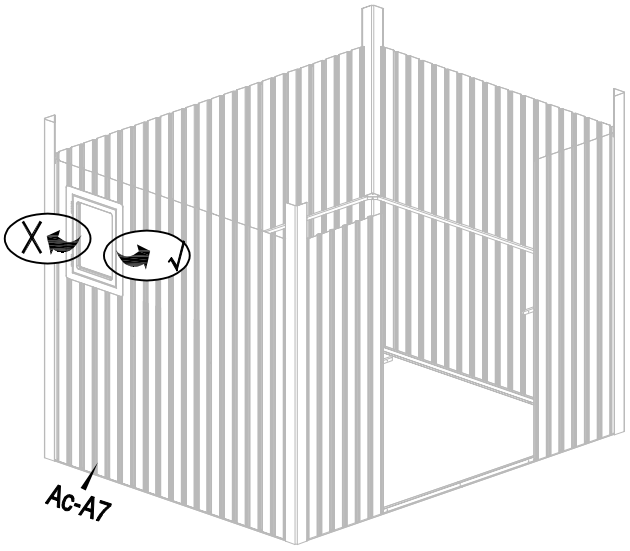

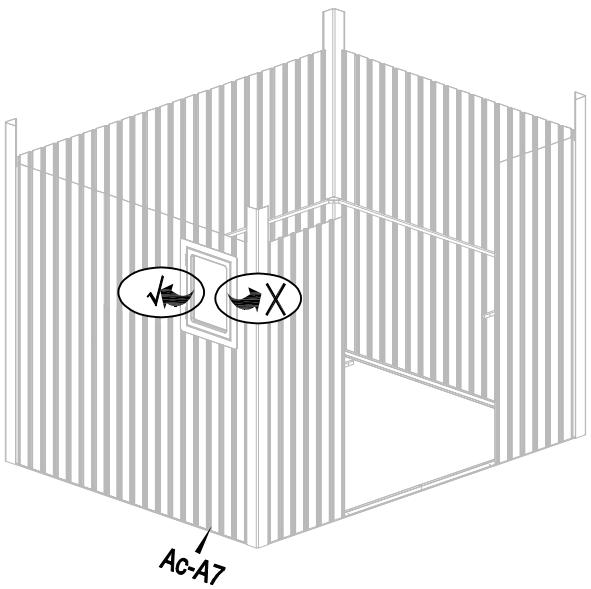

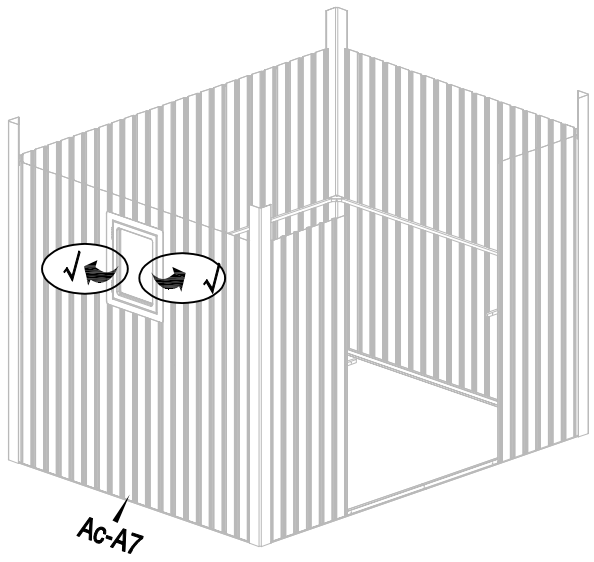
Ac-A7

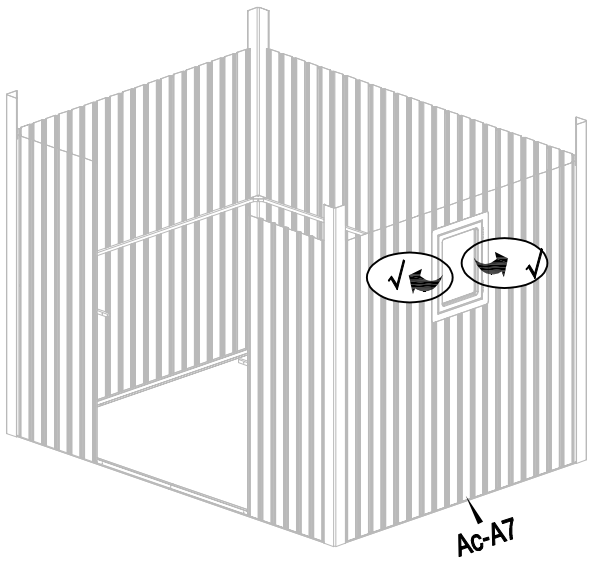
Ac-A7

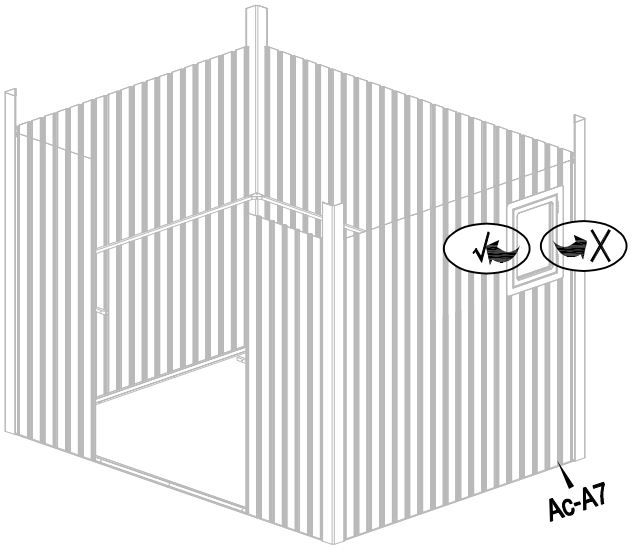
Ac-A7

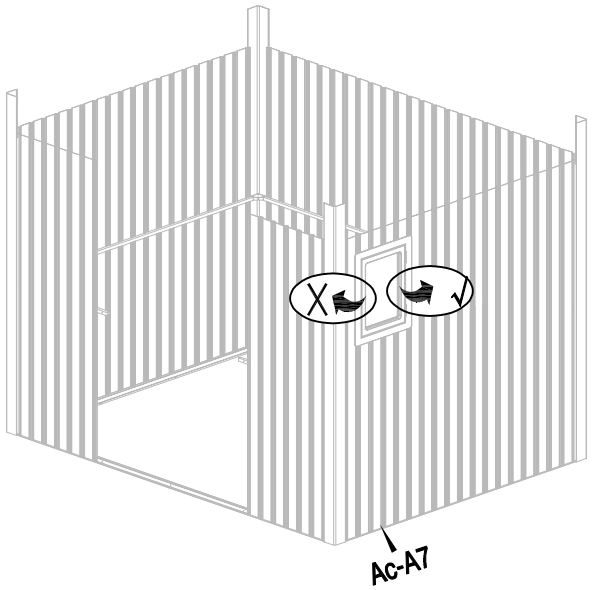
Ac-A7

3

Ac-A6 x1	Ana-A5 x1	Ana-B10 x1	Ana-C41 x5	Ana-C40 x5

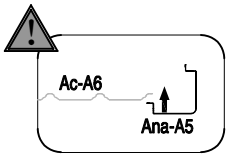

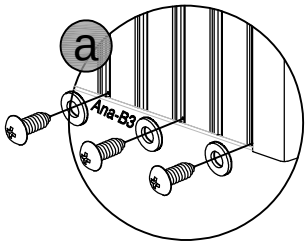

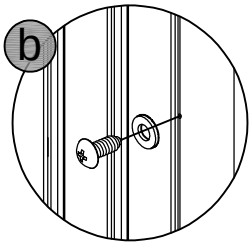

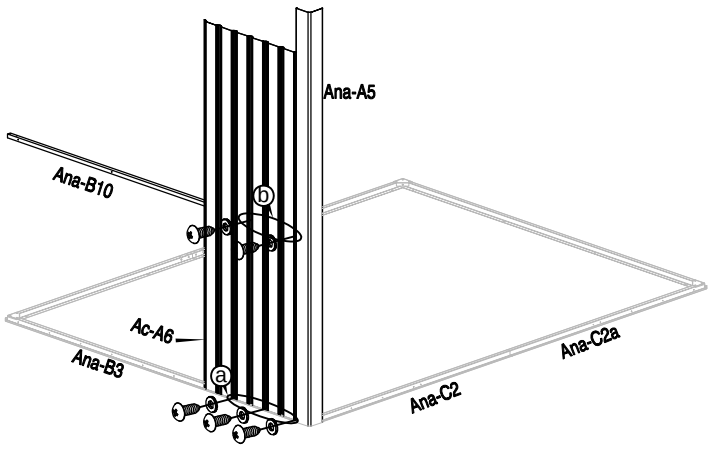

4

Ac-A6 x1	Ana-C11 x1	Ana-C41 x5	Ana-C40 x5

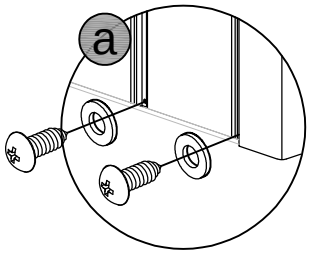

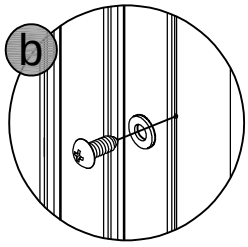

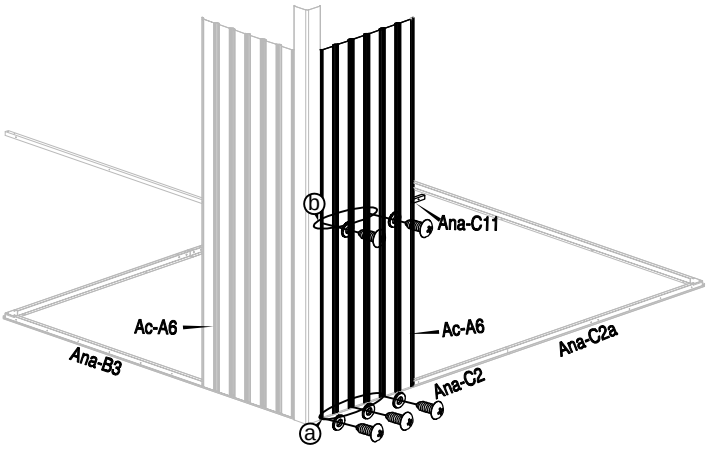

5				
	Ac-A7 x1	Ana-C41 x5	Ana-C40 x5	

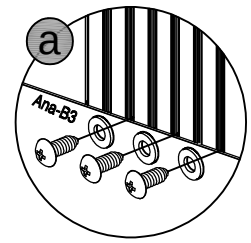

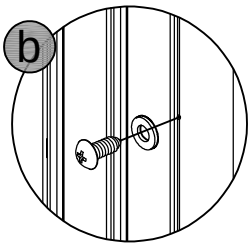

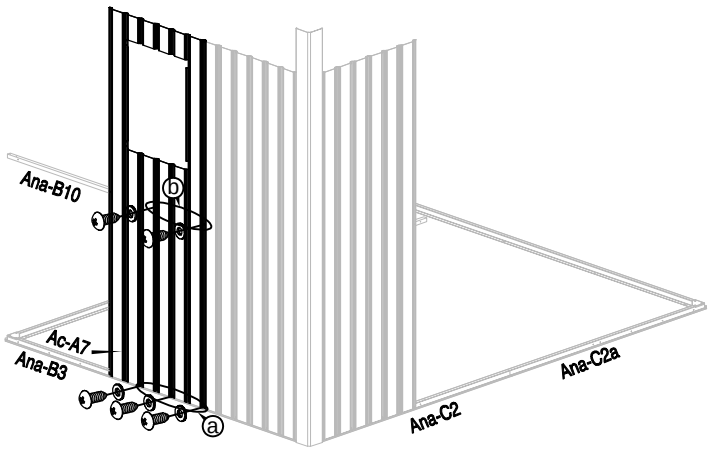

6					
	Ac-A6 x1	Ana-A5 x1	Ana-C41 x7	Ana-C40 x7	

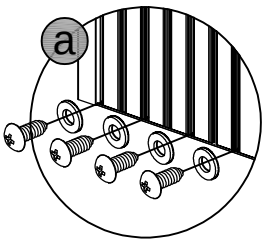

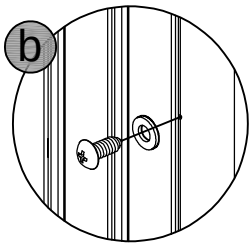

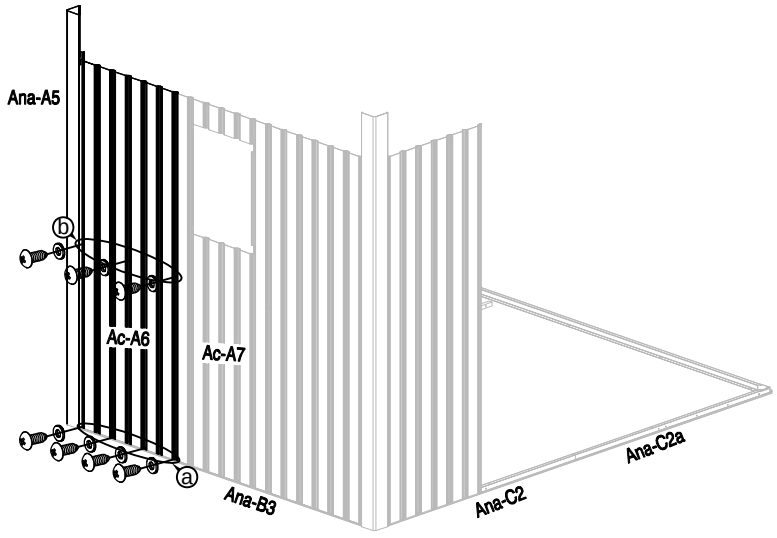

7	Ac-A6 x1	Ana-C9 x1	Ana-C41 x5	Ana-C40 x5	

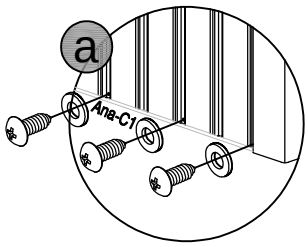

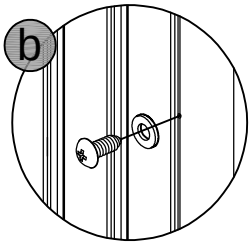

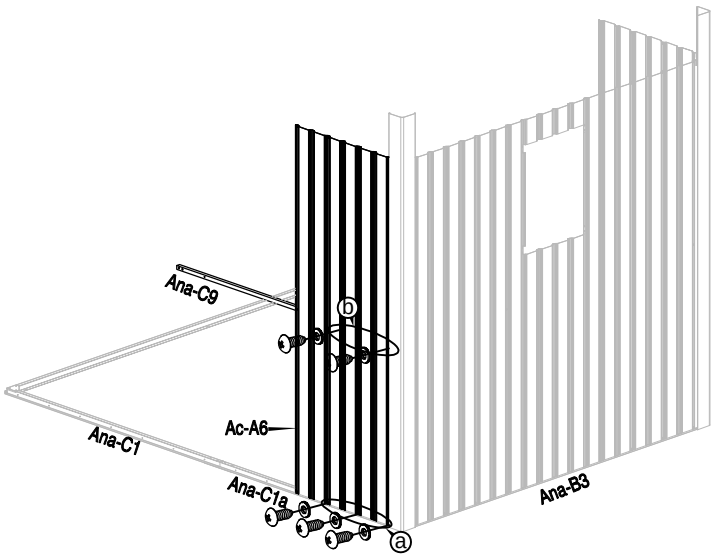

8	Ac-A6 x1	Ana-C9a x1	Ana-C41 x9	Ana-C40 x5	

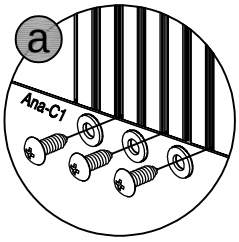

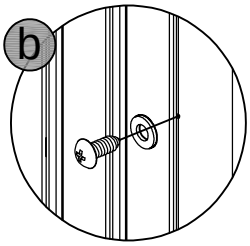

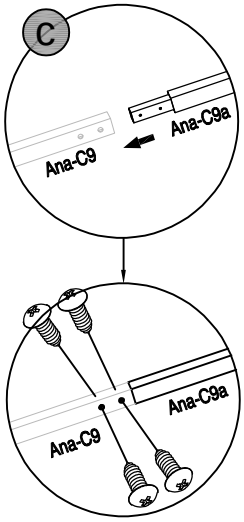

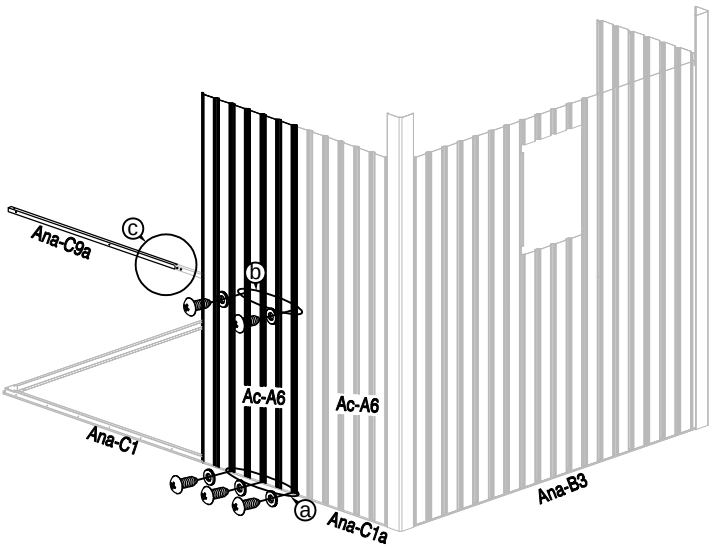

9				
	Ac-A6 x1	Ana-C41 x5	Ana-C40 x5	

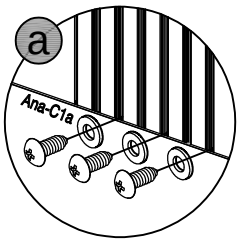

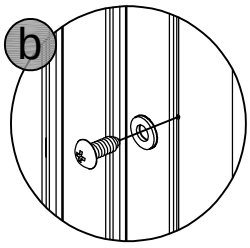

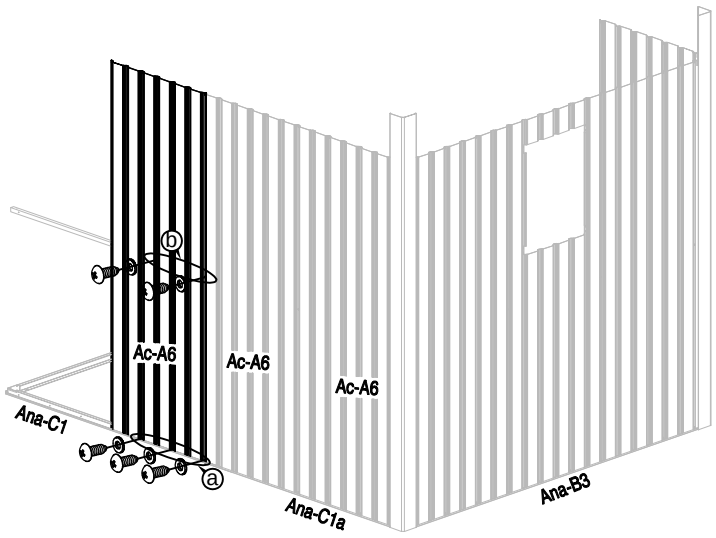

10					
	Ac-A6 x1	Ana-A5 x1	Ana-C41 x7	Ana-C40 x7	

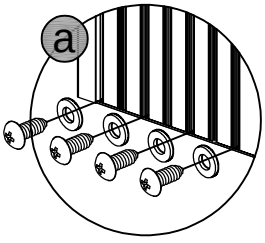

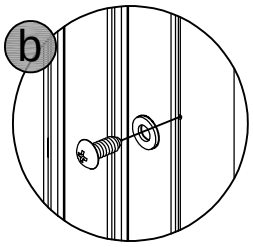

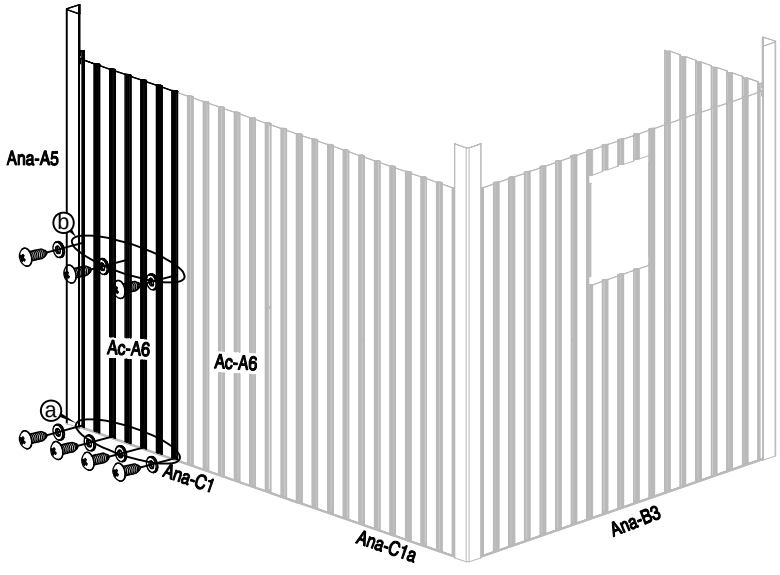

11					
	Ac-A6 x1	Ana-B10 x1	Ana-C41 x5	Ana-C40 x5	

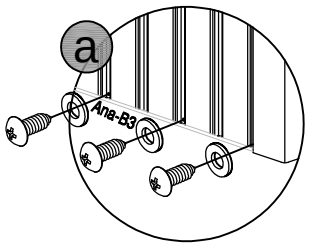

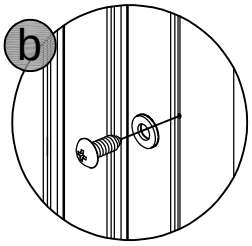

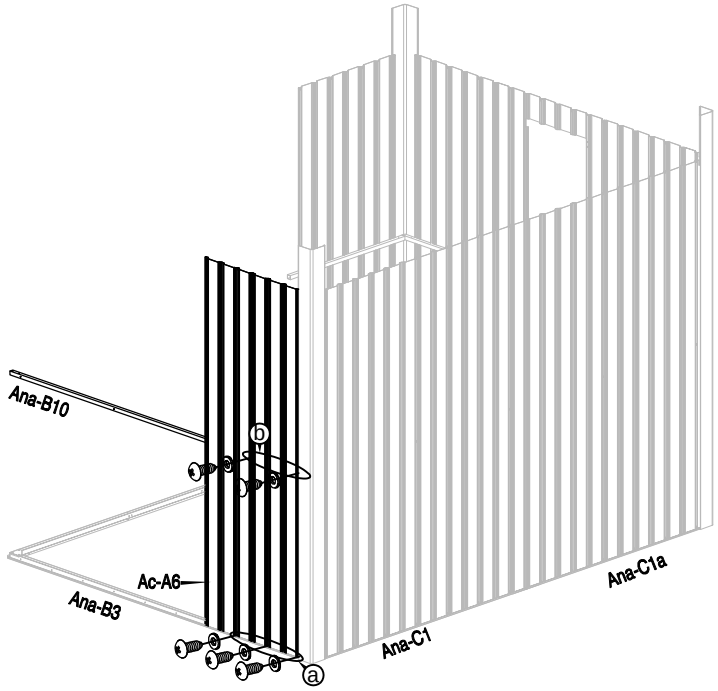

12				
	Ac-A6 x1	Ana-C41 x5	Ana-C40 x5	

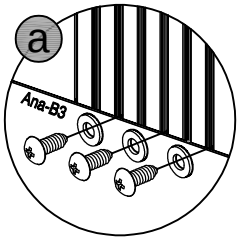

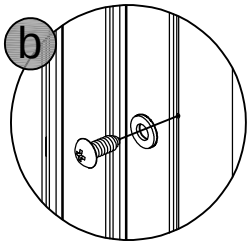

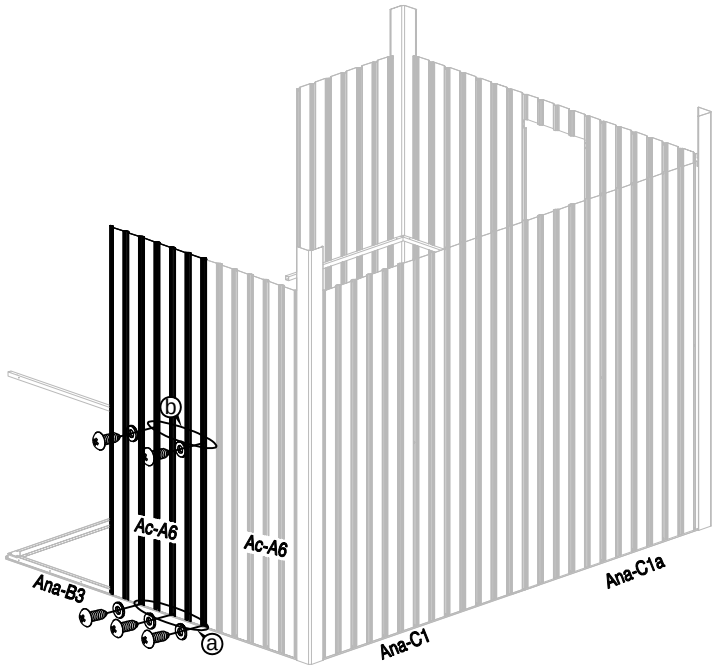

13					
	Ac-A6 x1	Ana-A5 x1	Ana-C41 x7	Ana-C40 x7	

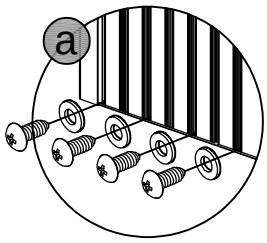

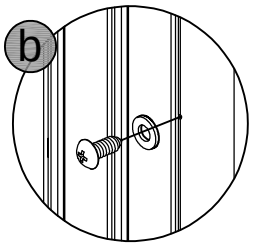

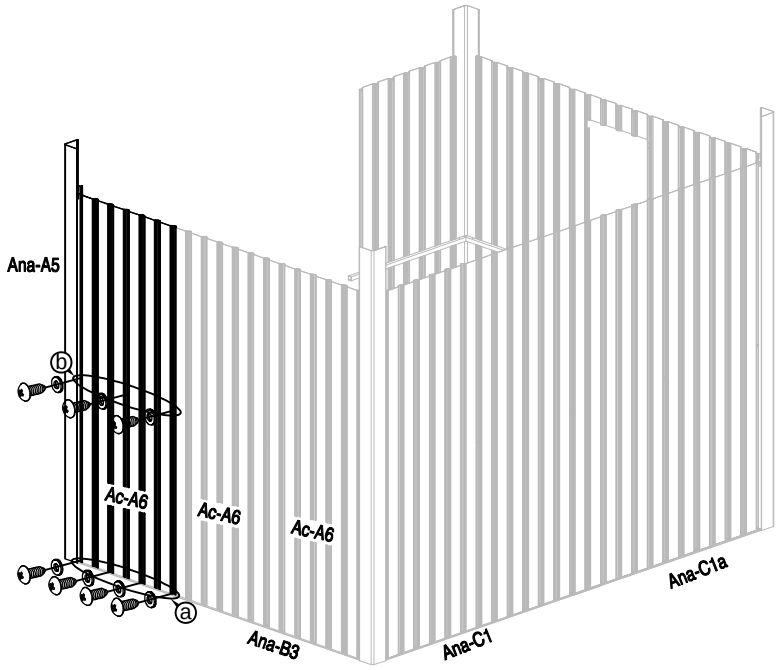

14					
	Ac-A6 x1	Ana-C11 x1	Ana-C41 x5	Ana-C40 x5	

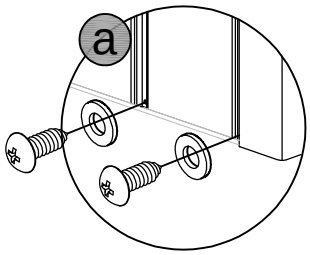

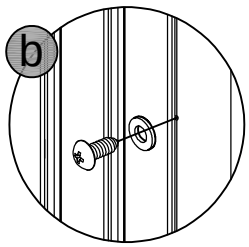

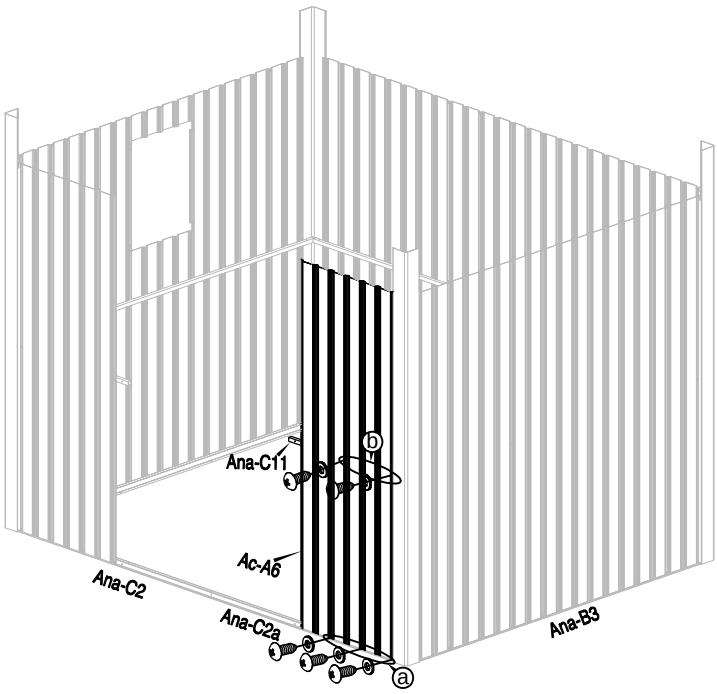

15			
	Ab-4 x4	Ana-C41 x12	

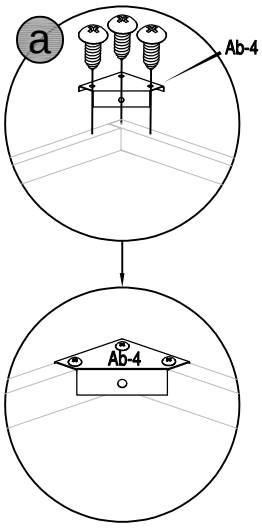

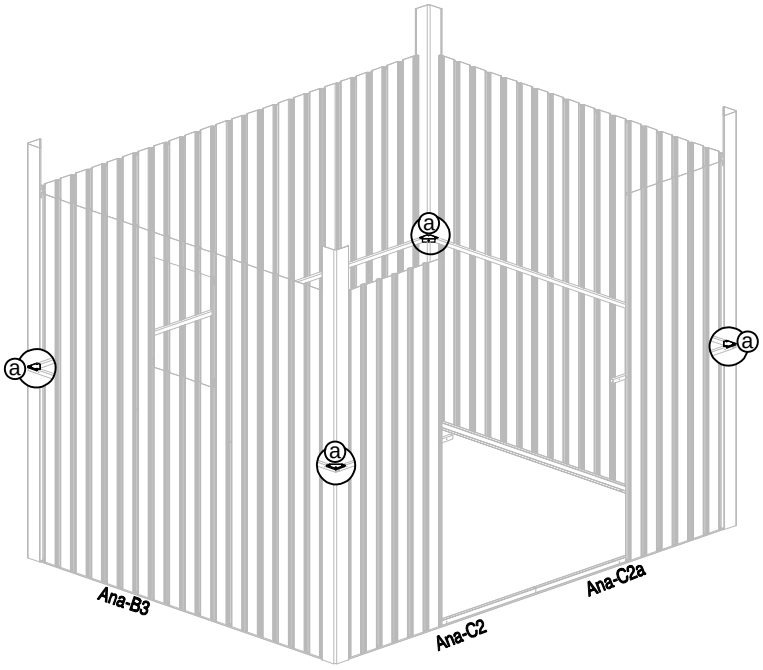

16						
	Ana-B14 x1	Ana-C13 x1	Ana-C13a x1	Ana-C41 x20	Ana-C40 x16	

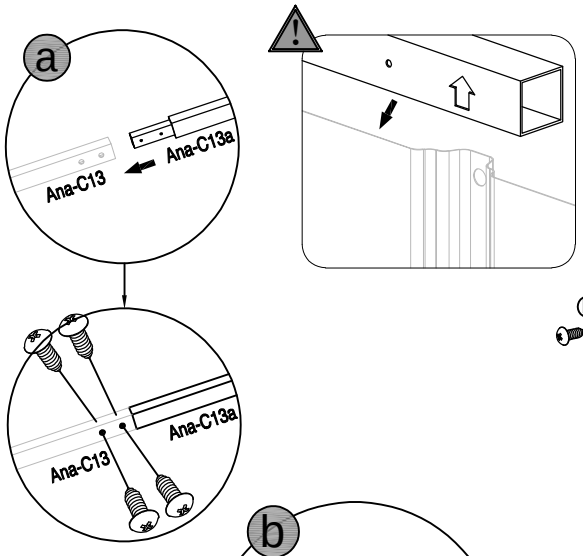

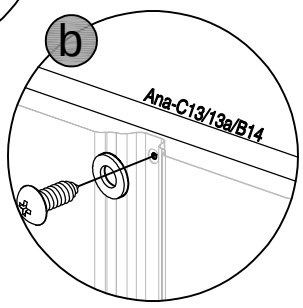

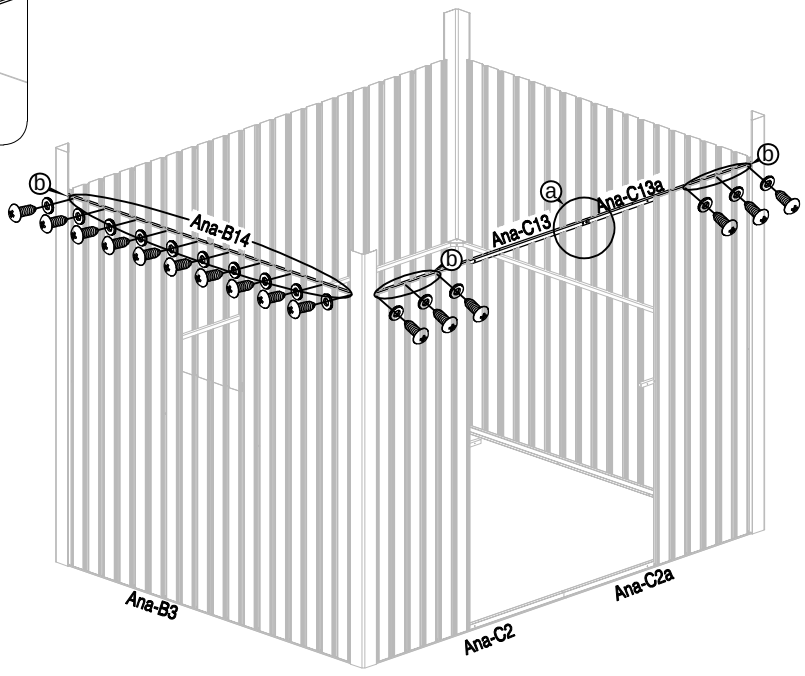

17						
	Ana-B14 x1	Ana-C12 x1	Ana-C12a x1	Ana-C41 x27	Ana-C40 x23	

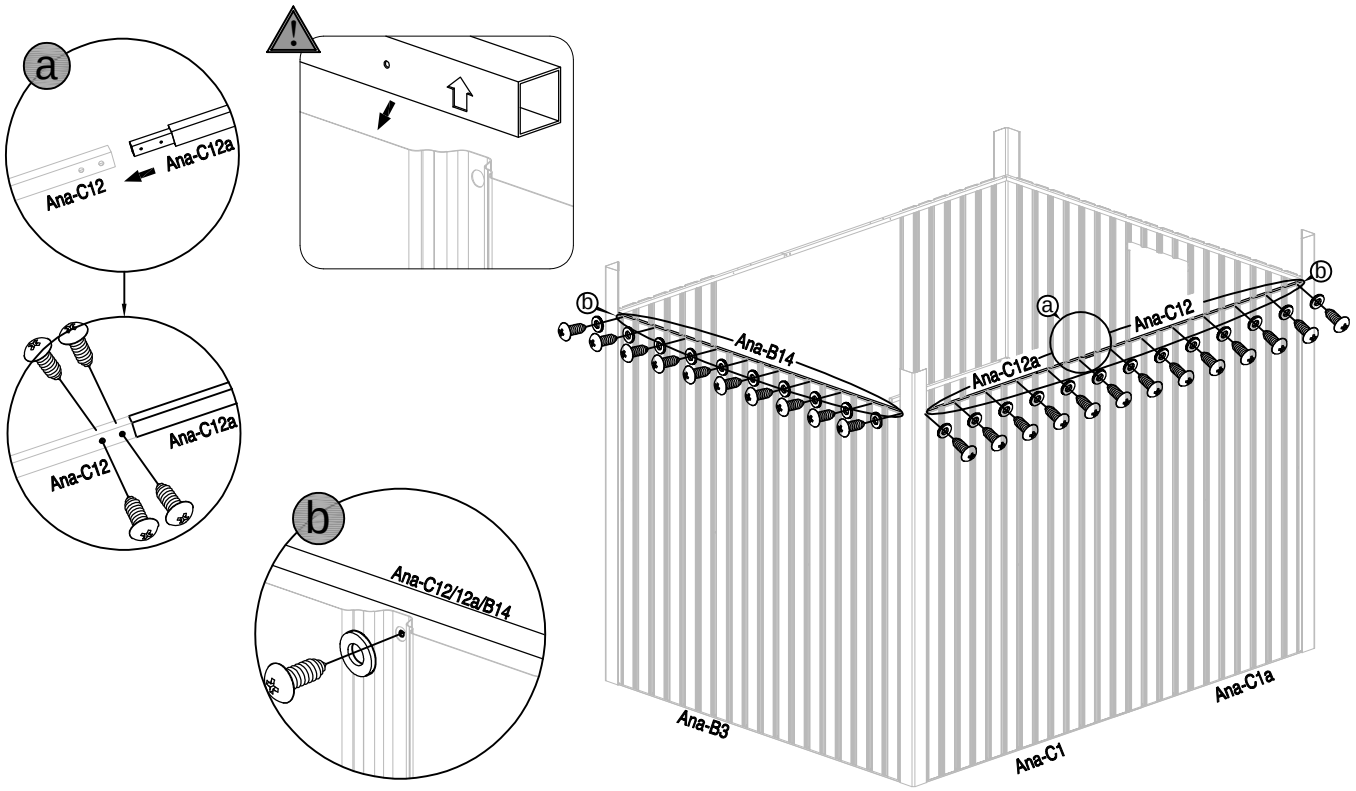

18			
	Ab-4 x4	Ana-C41 x12	

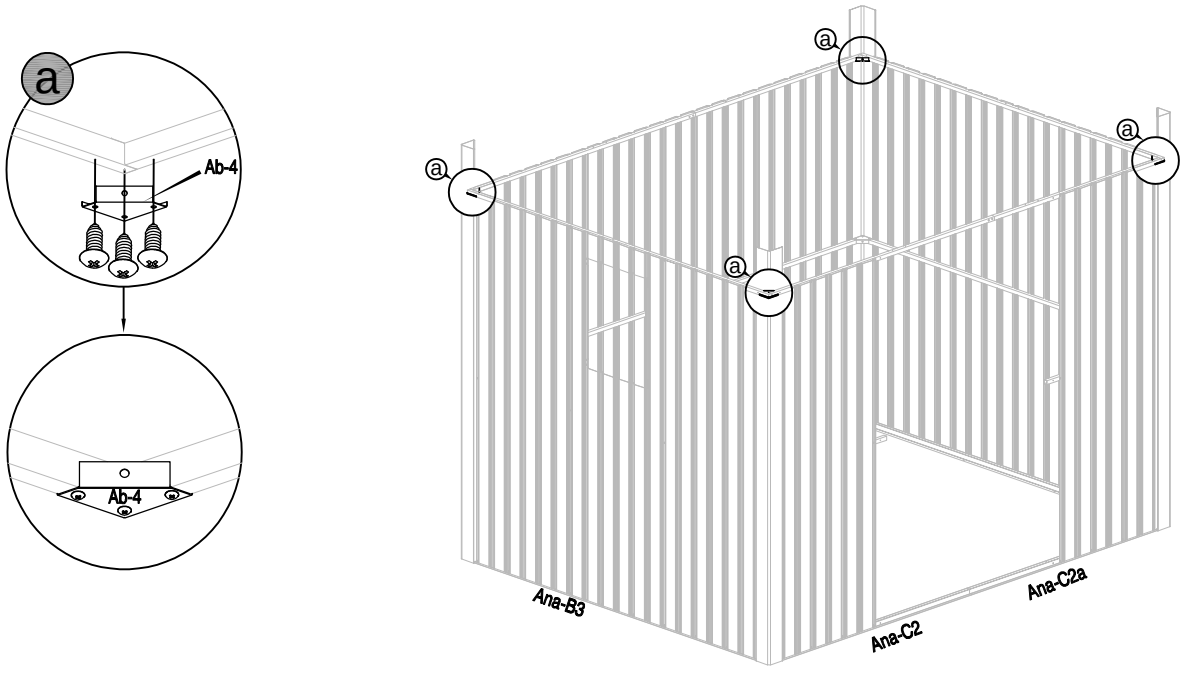

19

Ana-A4 x1

Ana-C41 x6

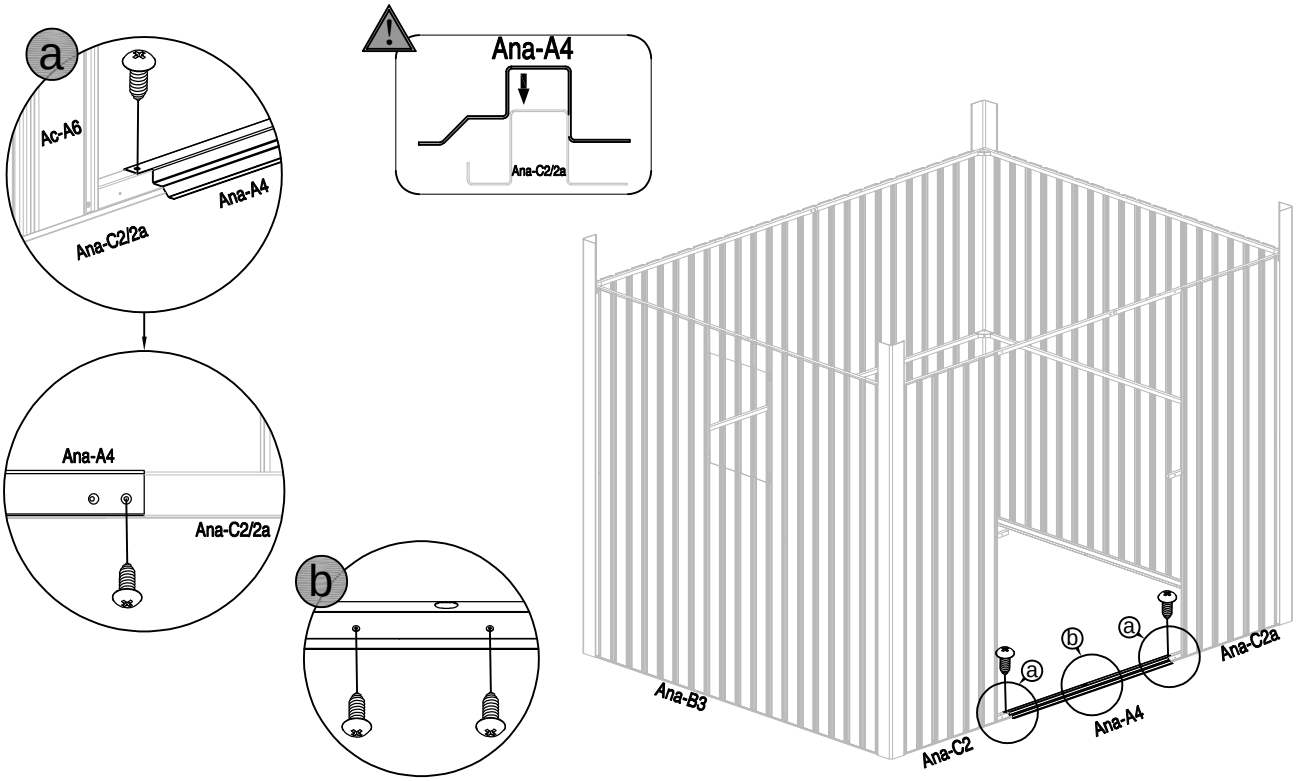

20

Ana-A15 x1

Ana-A15a x1

Ana-C41 x6

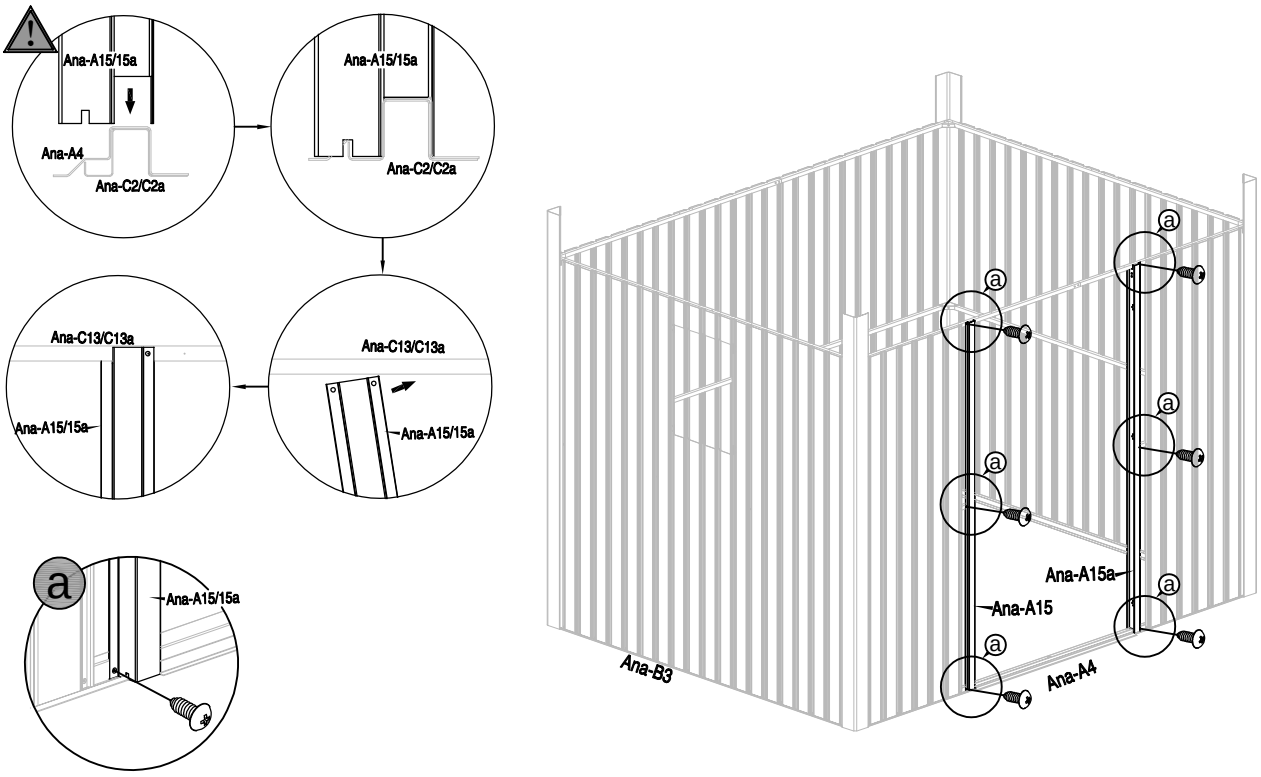

21					
	Ana-A16 x1	Ana-A16a x1	Ana-C41 x10	Ana-C40 x6	

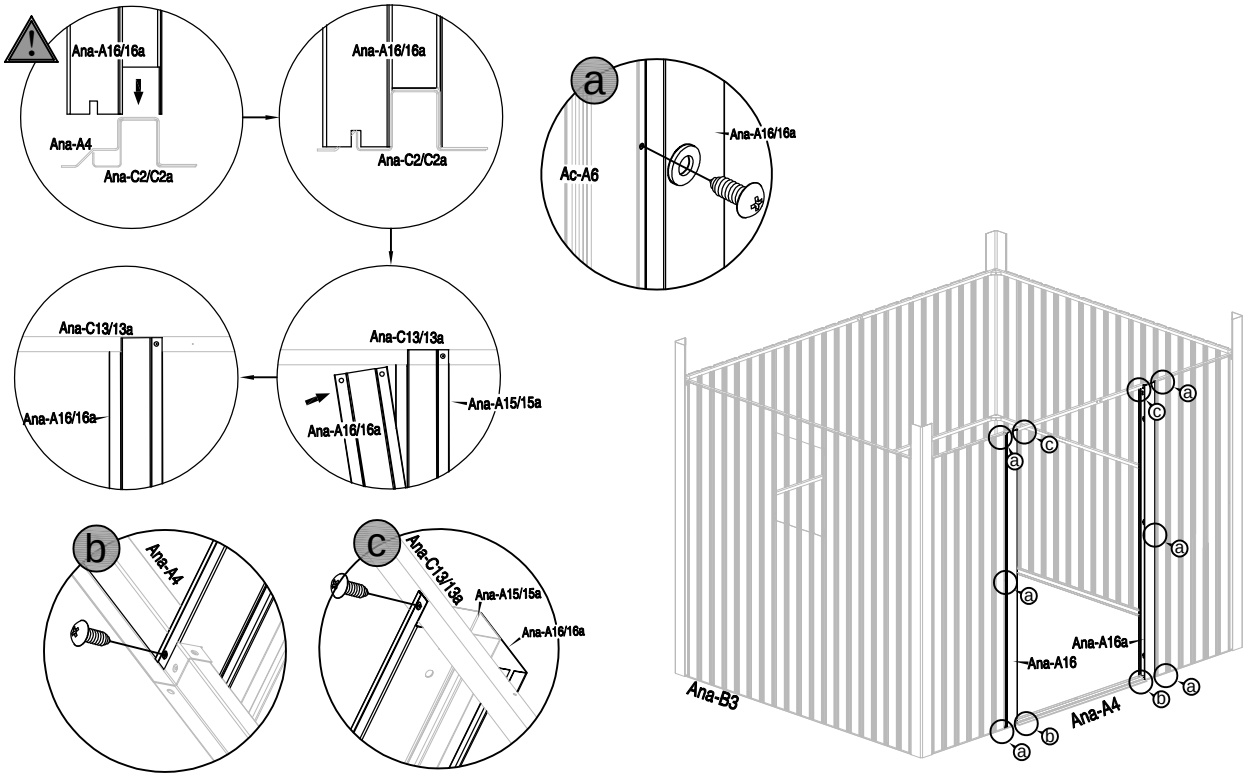

22			
	Ana-A17 x1	Ana-A44 x4	

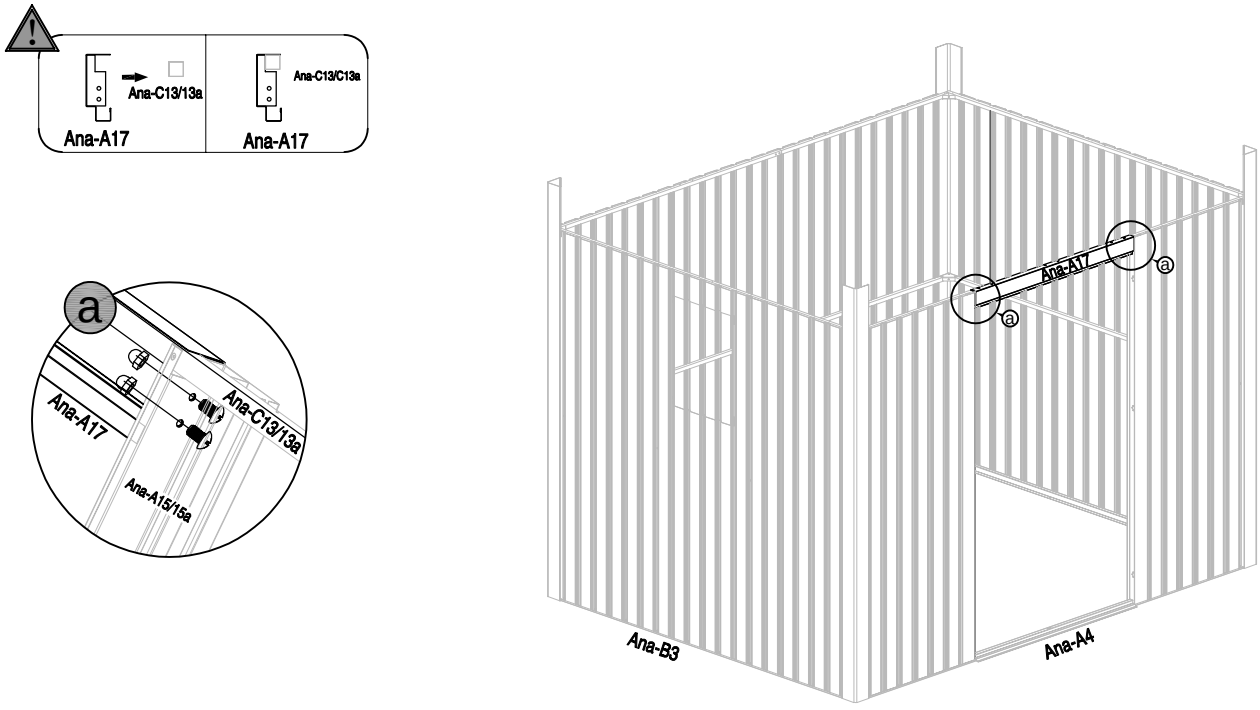

23


Ana-A18 x2


Ana-C18 x2


Ana-C18a x2

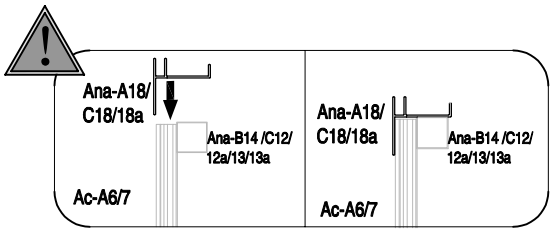

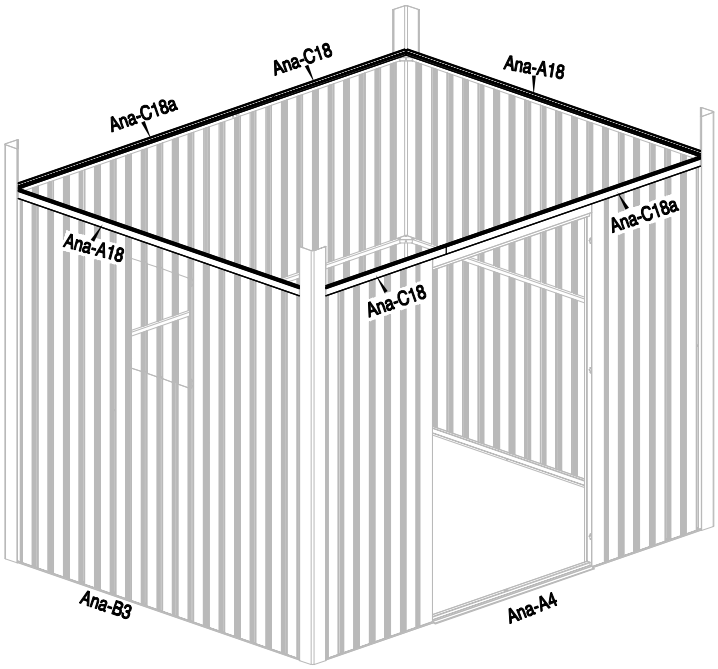

24


Ana-A22b x2


Ana-A22a x4


Ana-C22 x4


Ana-C41 x20

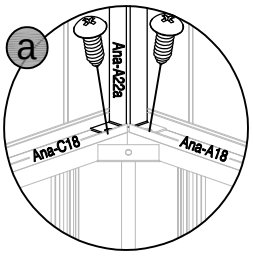

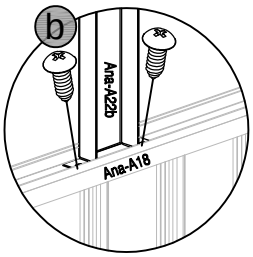

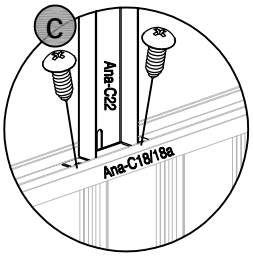

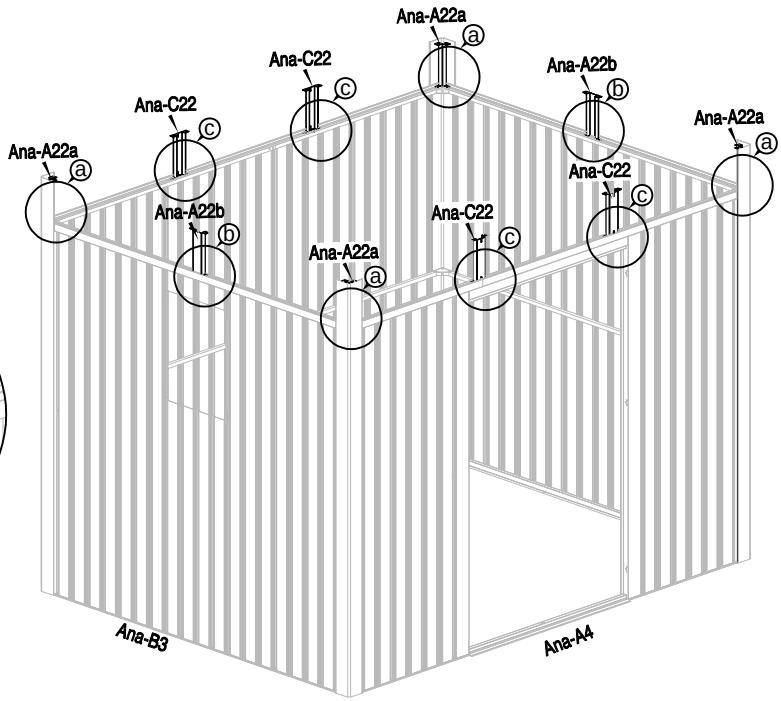

25

Ana-A36 x2

Ana-C36 x5

Ana-C38 x1

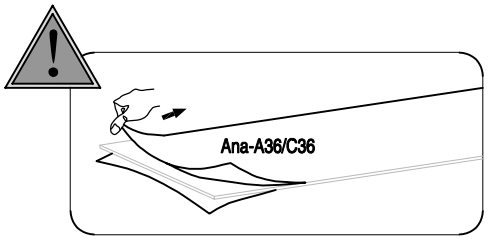

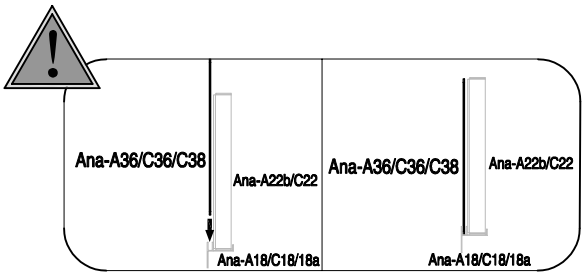

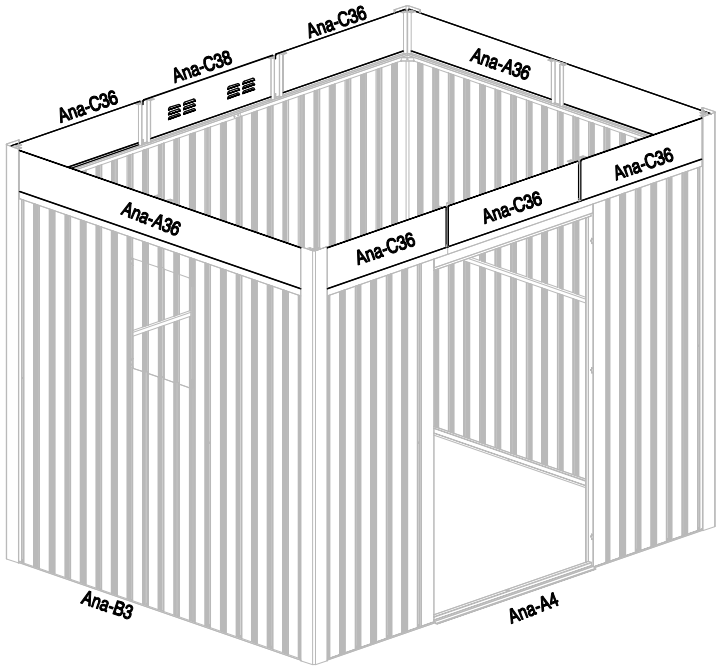

26

Ana-C33 x4

Ana-C46 x4

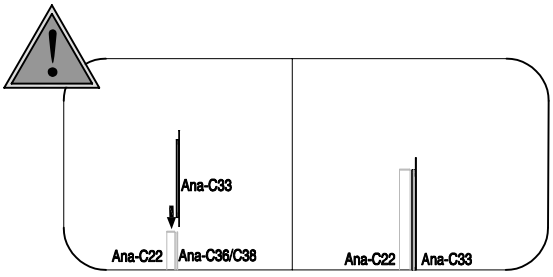

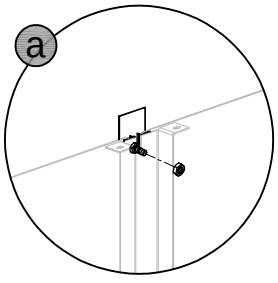

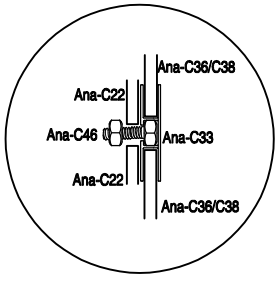

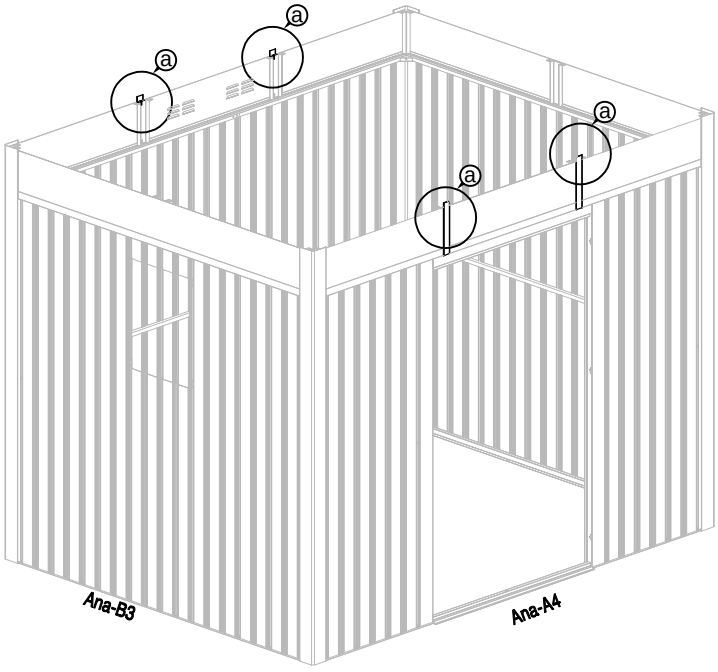

27

Ana-C23 x2

Ana-C23a x2

Ana-C18 x2

Ana-C18a x2

Ana-C41 x16

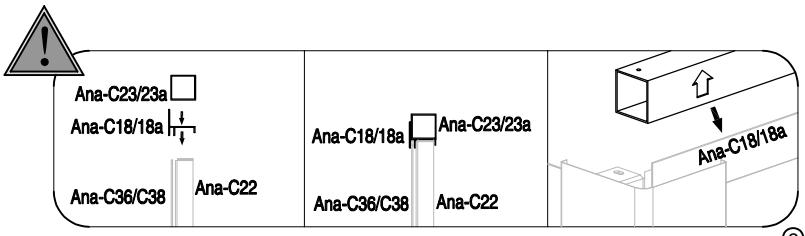

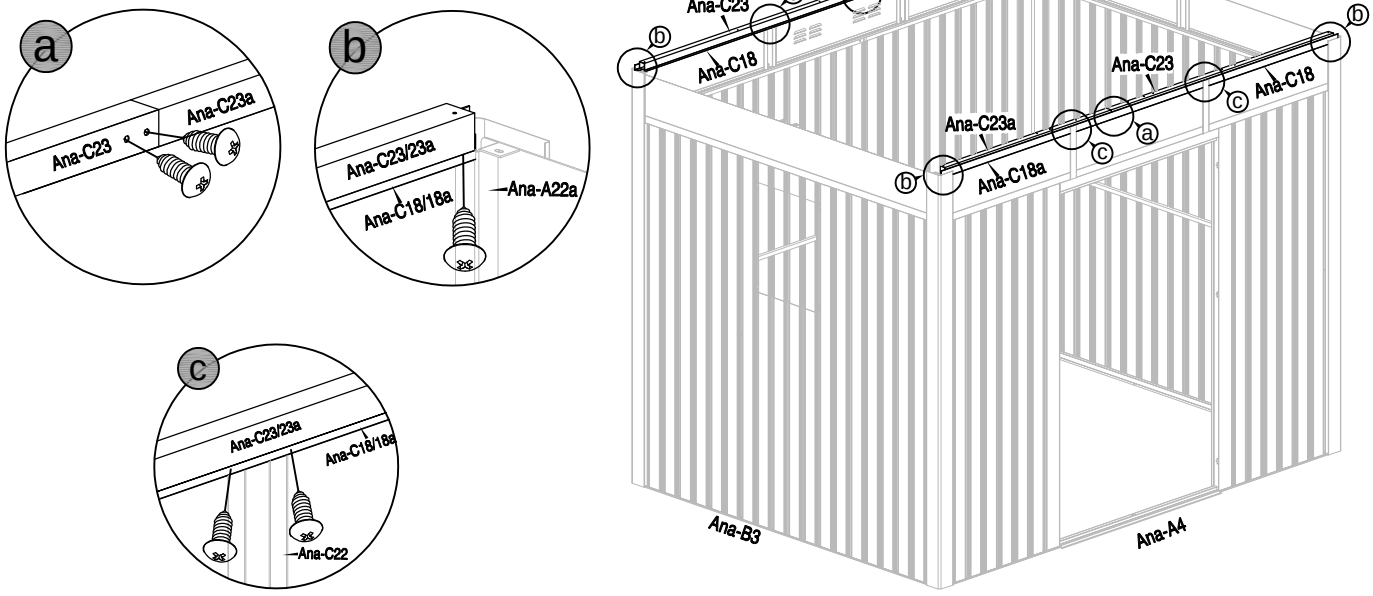

28

Ana-B27 x2

Ana-A18 x2

Ana-C41 x8

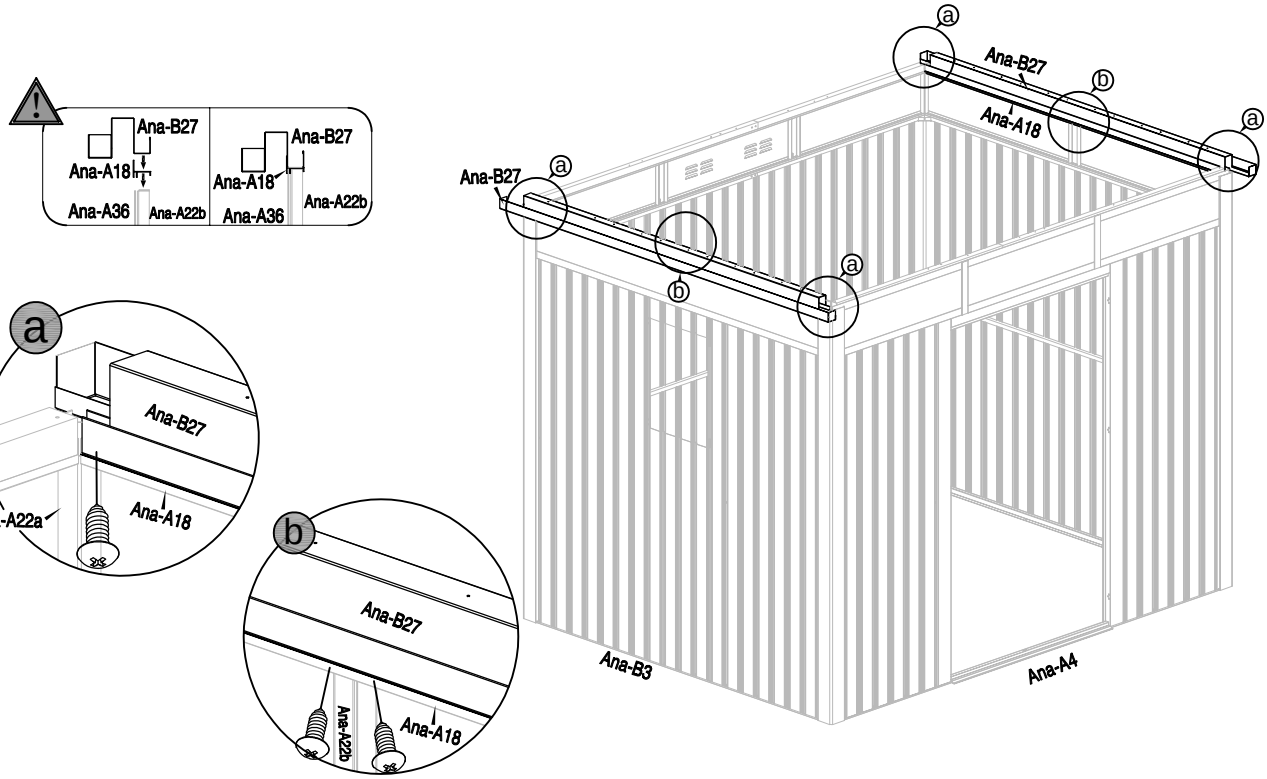

29				
	Ana-C27 x2	Ana-C27a x2	Ana-C41 x8	

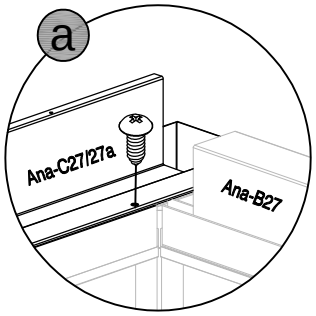

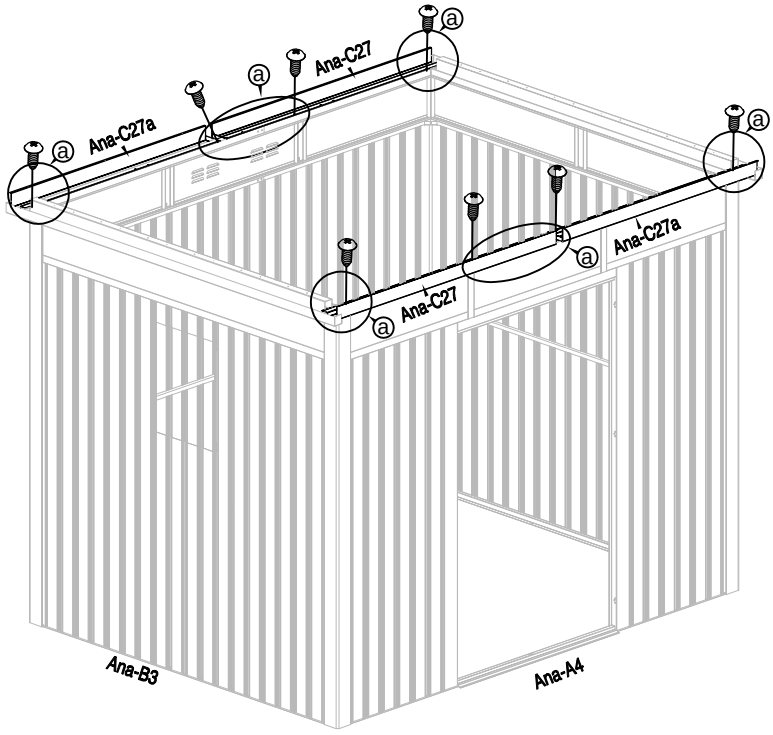

30				
	Ana-C30 x1	Ana-C31 x1	Ana-C43 x4	

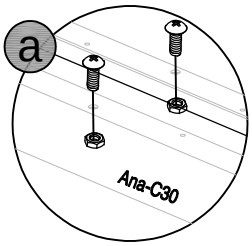

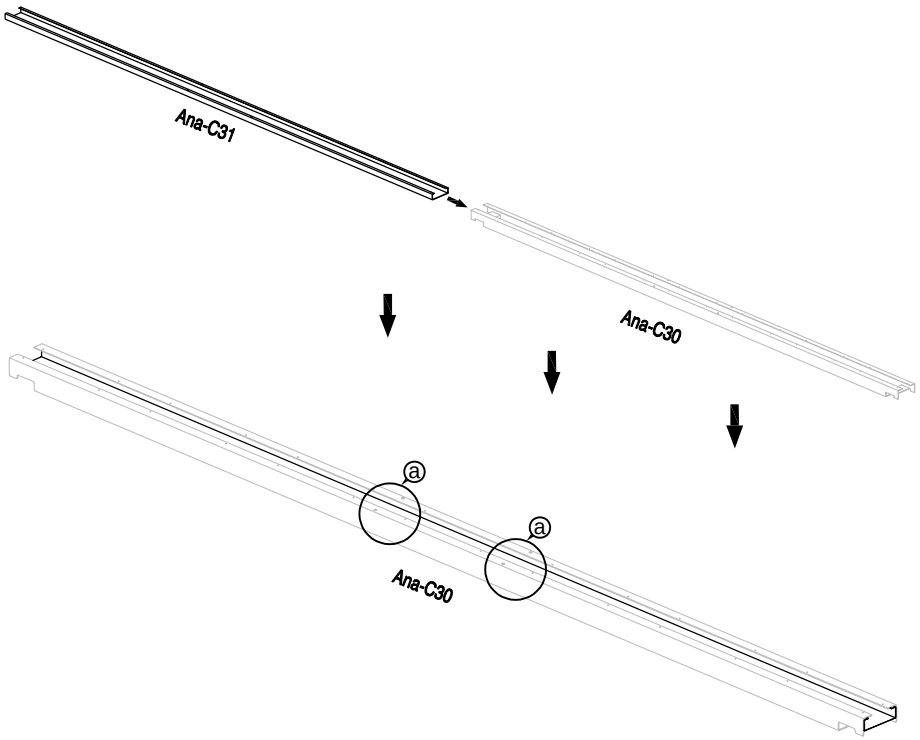

31			
	Ana-B26 x2	Ana-C41 x6	

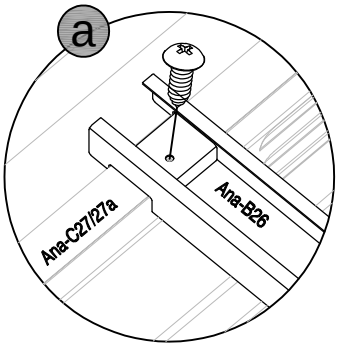

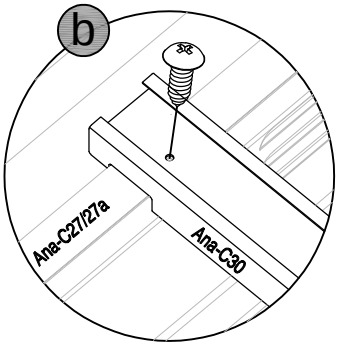

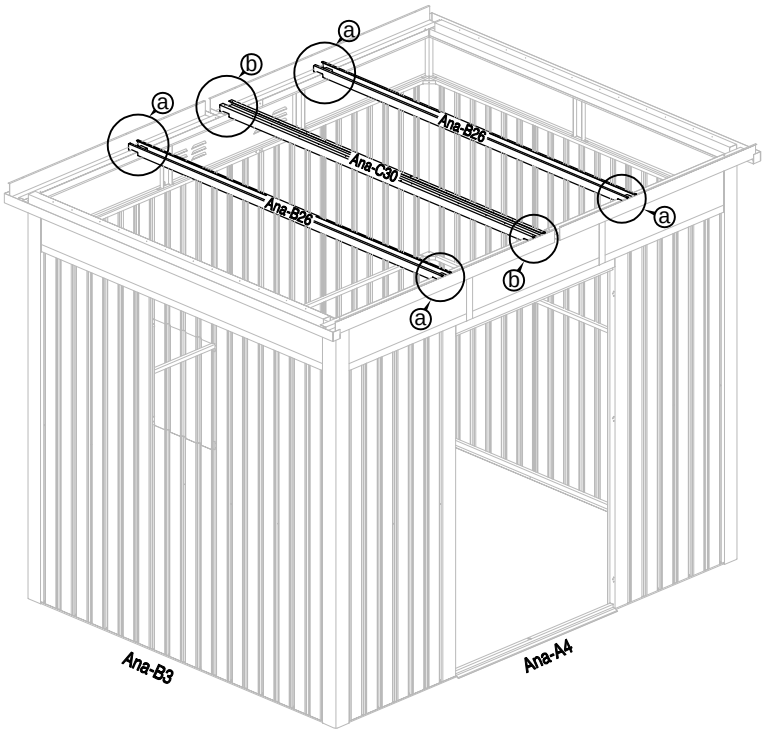

32		
	Ana-P1 x4	

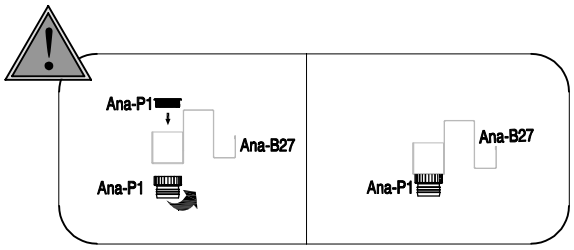

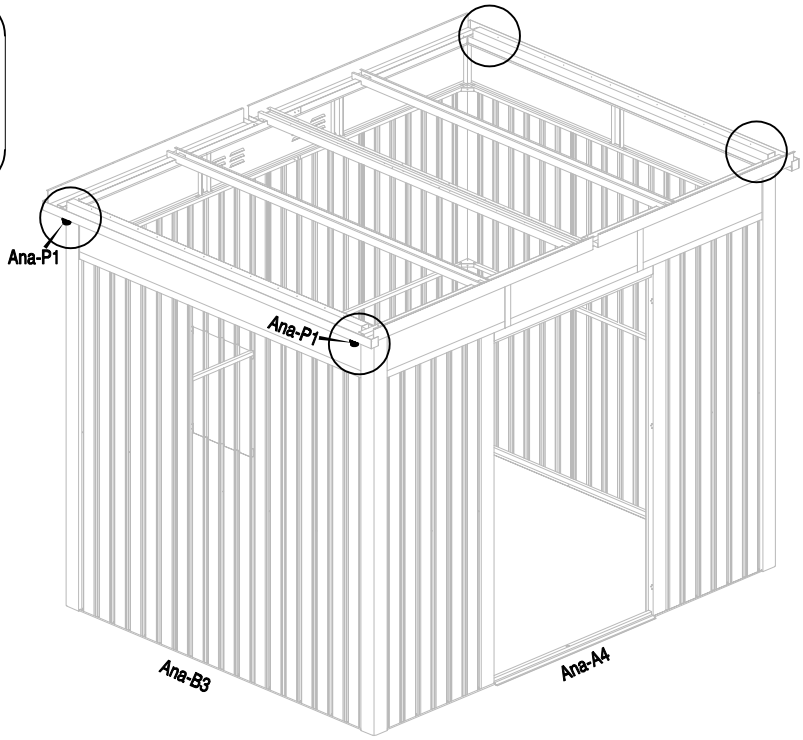

33					
	Ana-C25 x1	Ana-C25a x1	Ana-C41 x6	Ana-C40 x6	

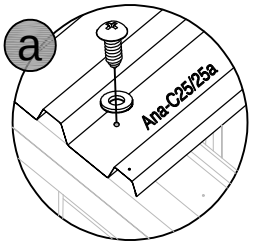

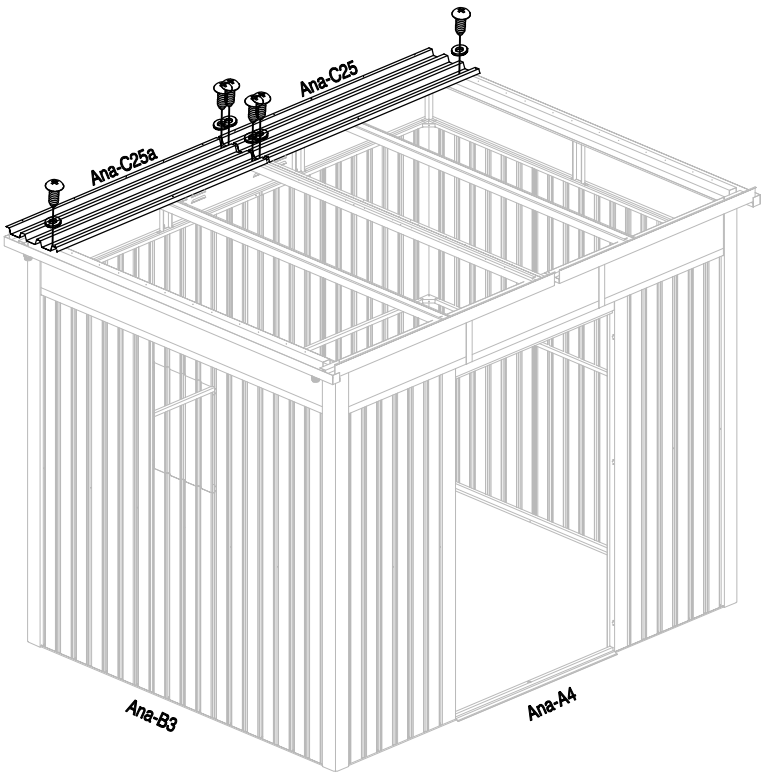

34				
	Ana-C24 x10	Ana-C41 x50	Ana-C40 x50	

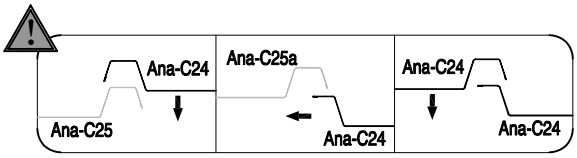

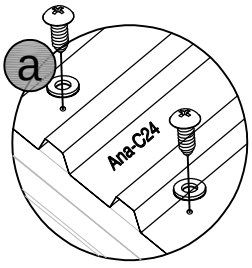

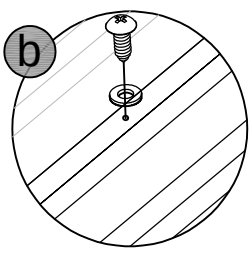

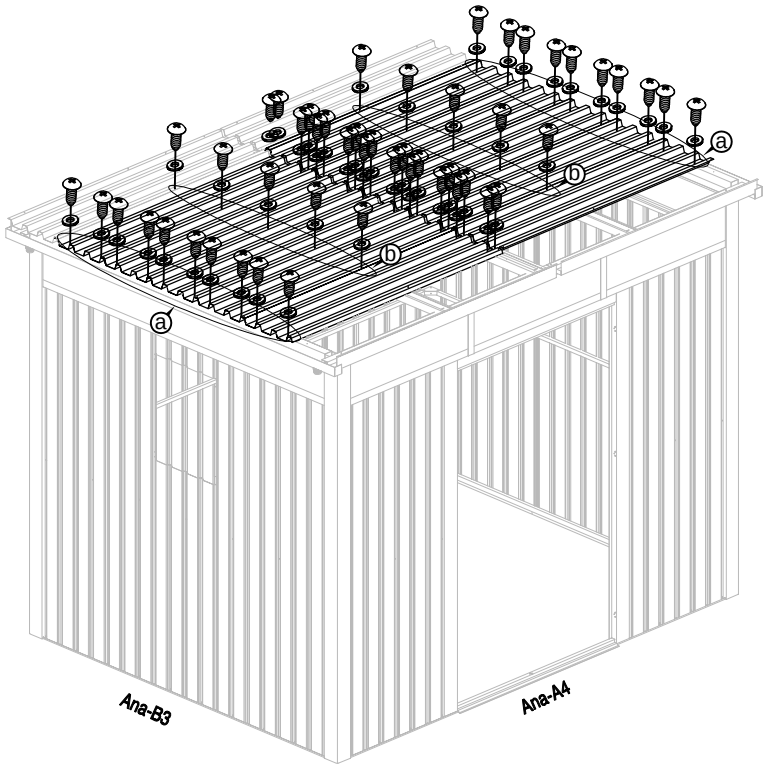

35					
	Ana-C25 x1	Ana-C25a x1	Ana-C41 x8	Ana-C40 x8	

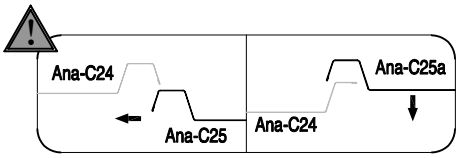

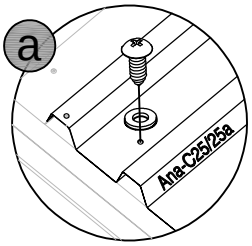

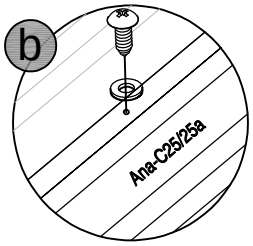

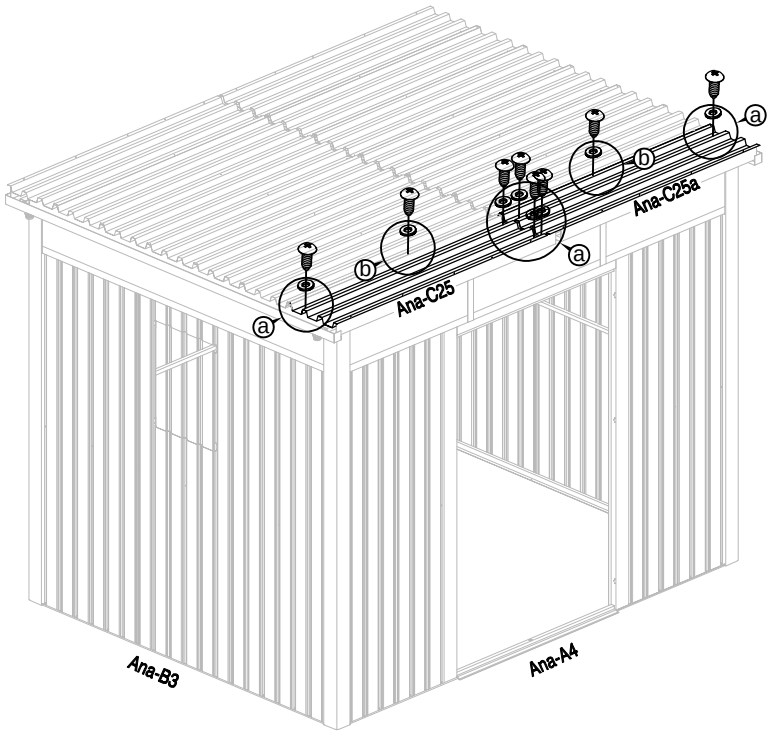

36				
	Ana-C29 x1	Ana-C47 x12	Ana-C40 x12	

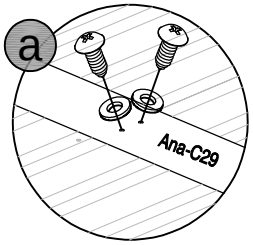

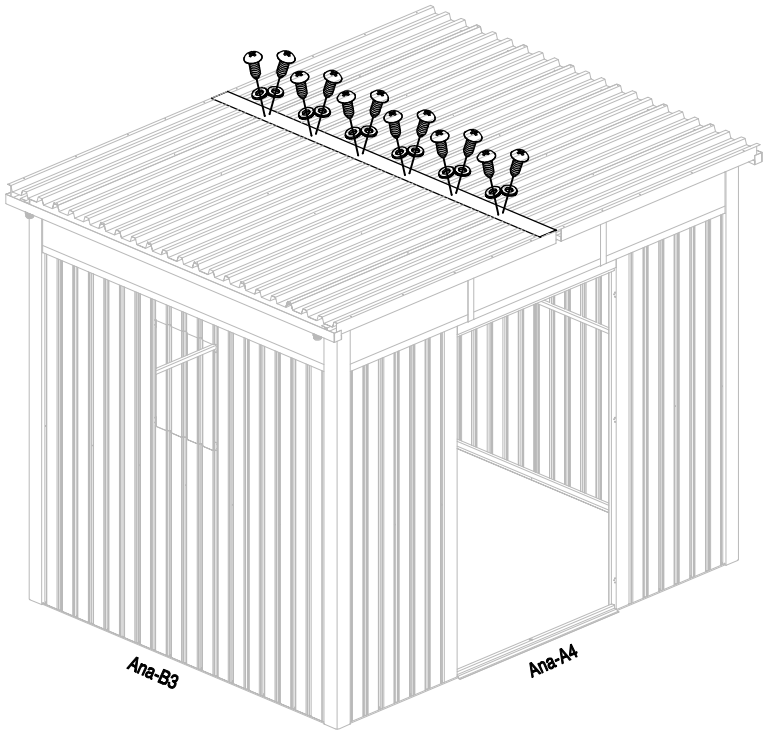

37						
	Ana-C35 x2	Ana-C35a x2	Ana-C28 x2	Ana-C28a x2	Ana-C43 x8	

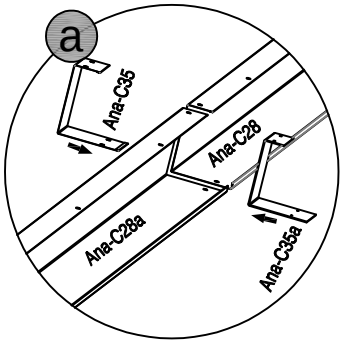

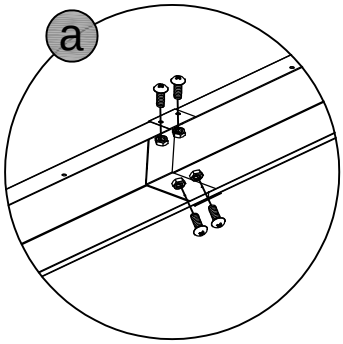

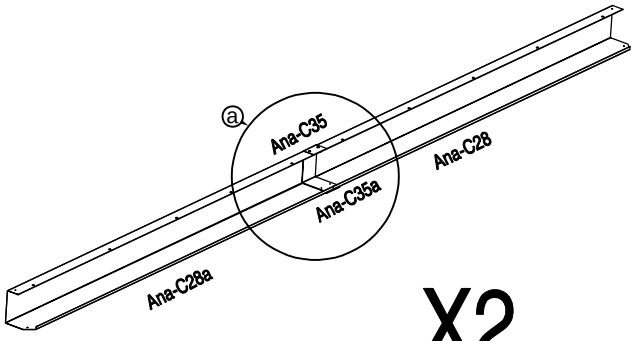

X2

38			
	Ana-B28 x2	Ana-C41 x32	Ana-C40 x32

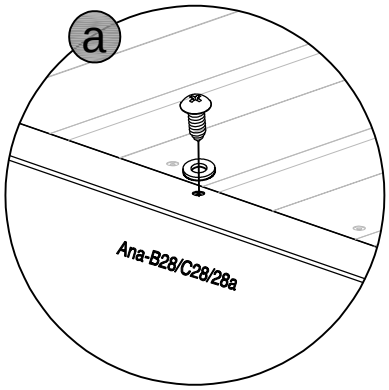

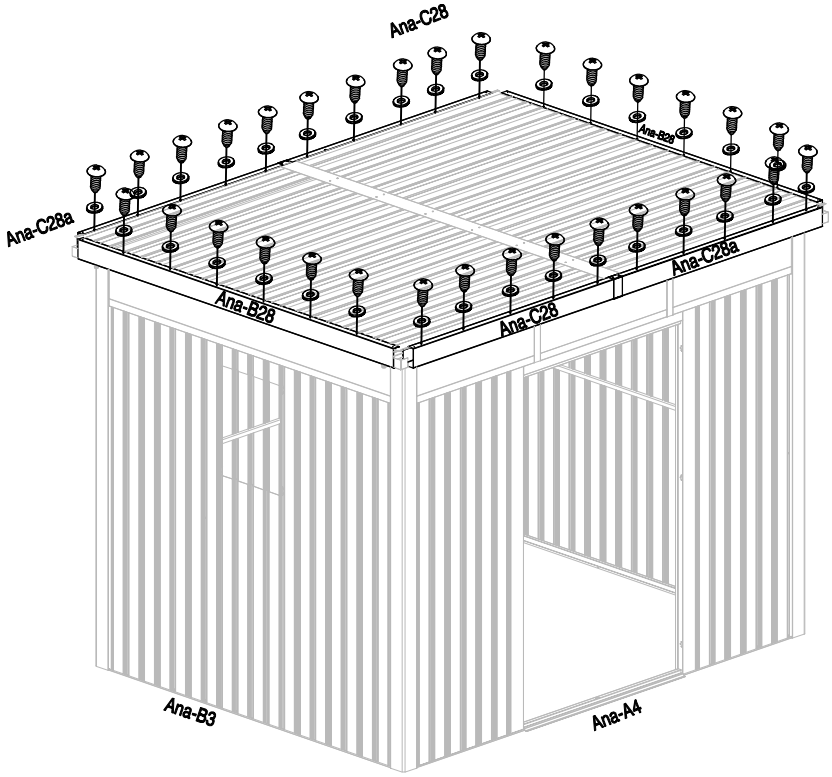

39			
	Ana-P2 x4	Ana-C41 x16	

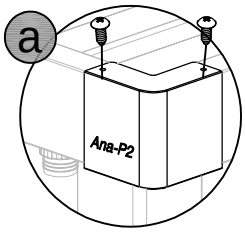

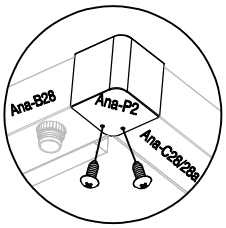

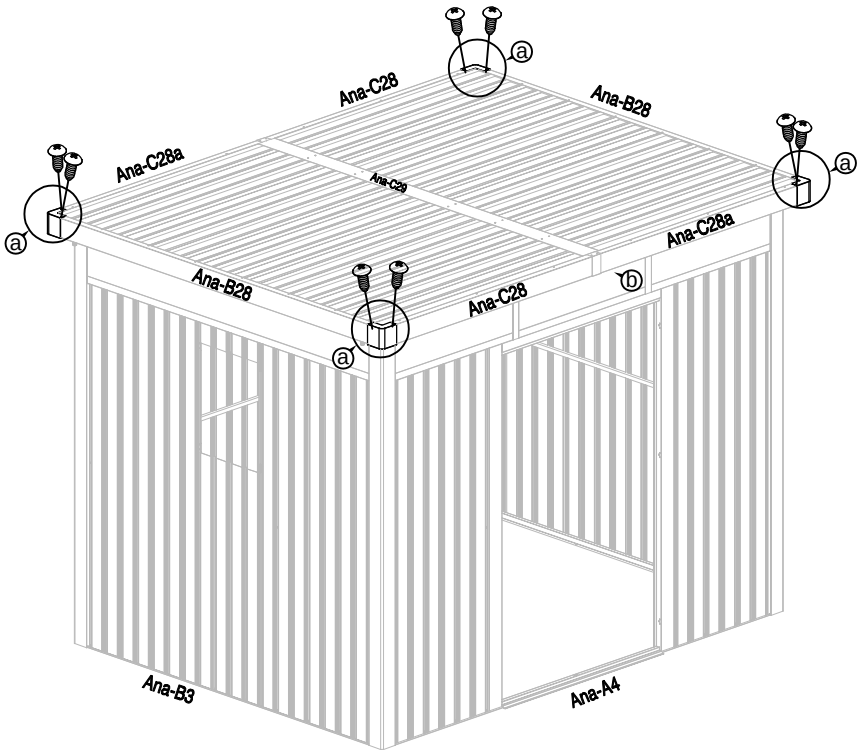

40			
	Ab-50 x6	Ana-A43 x18	

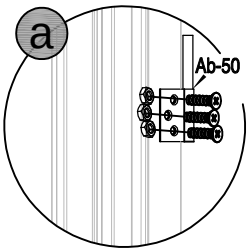

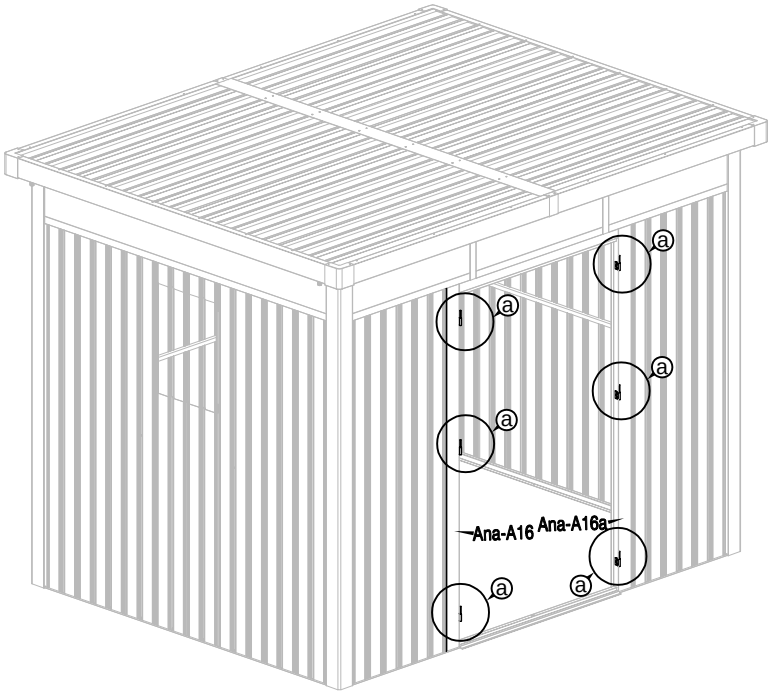

41								
	Ac-A29 x1	Ac-A29a x1	Ana-54 x1	Ana-55 x1	Ana-56 x1	Ana-57 x1	Ana-58 x3	

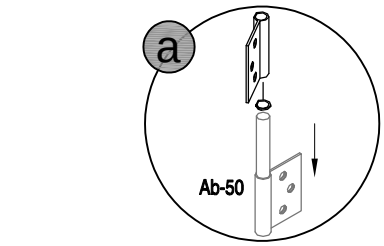

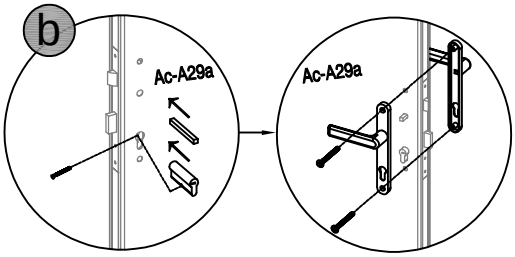

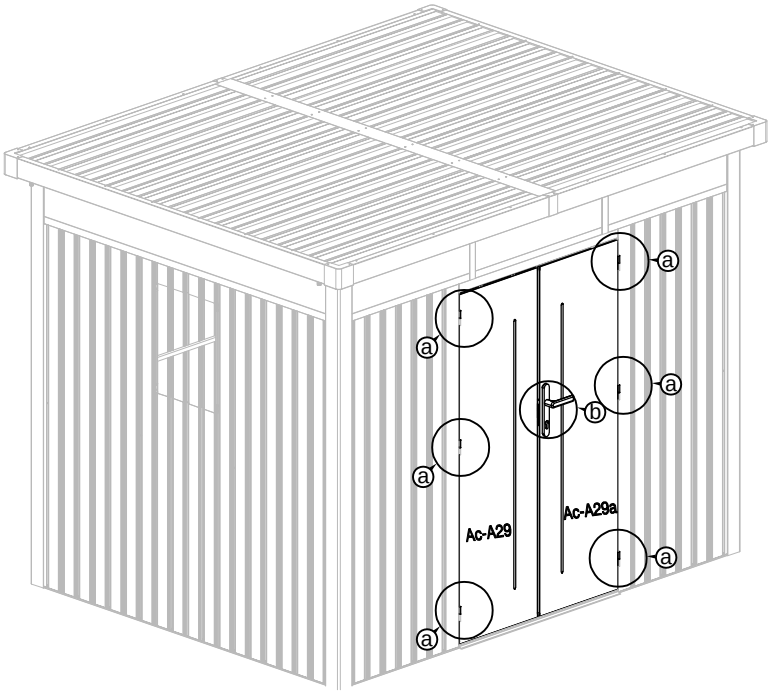

42			
	Ana-P6 x1	Ana-C41 x4	

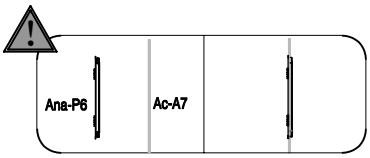

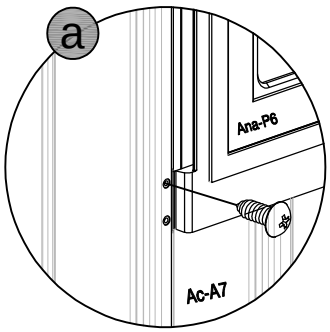

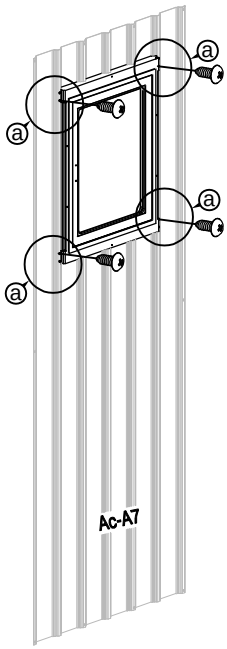

43



Ana-P7 x1



Ana-C41 x10

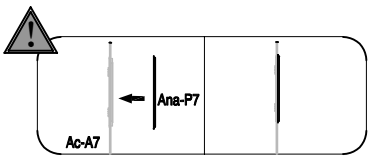

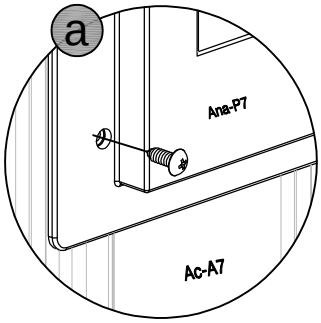

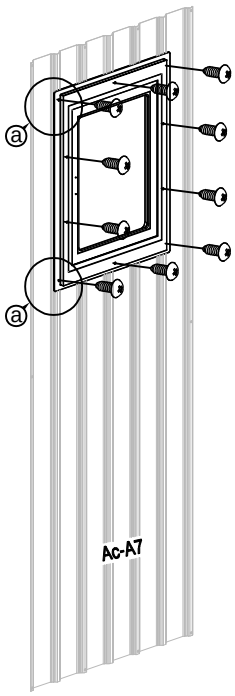

44



Ana-P8 x1



Ana-A42 x2

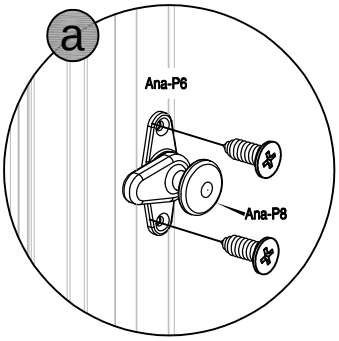

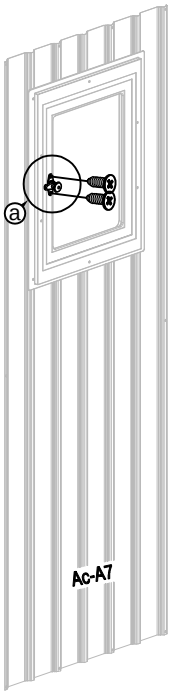

45

Ana-C37 x22M

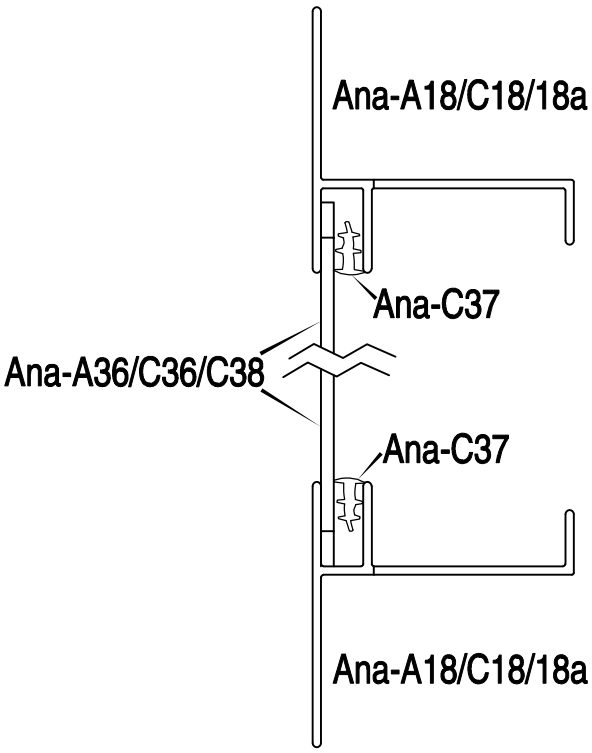

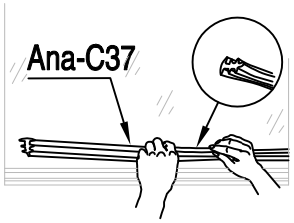

46

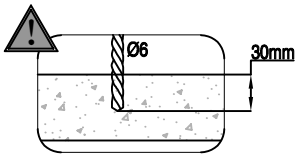

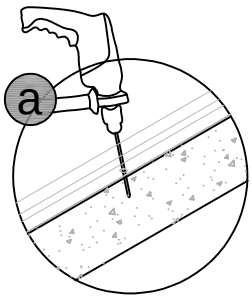

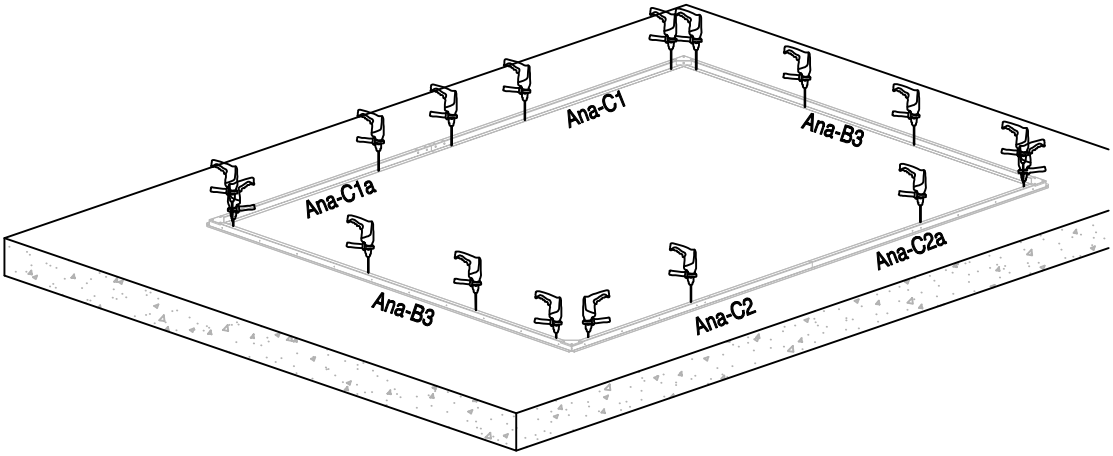

47



Ana-C45 x17

