Sunny A

OWNER'S MANUAL /
Instructions for Assembly

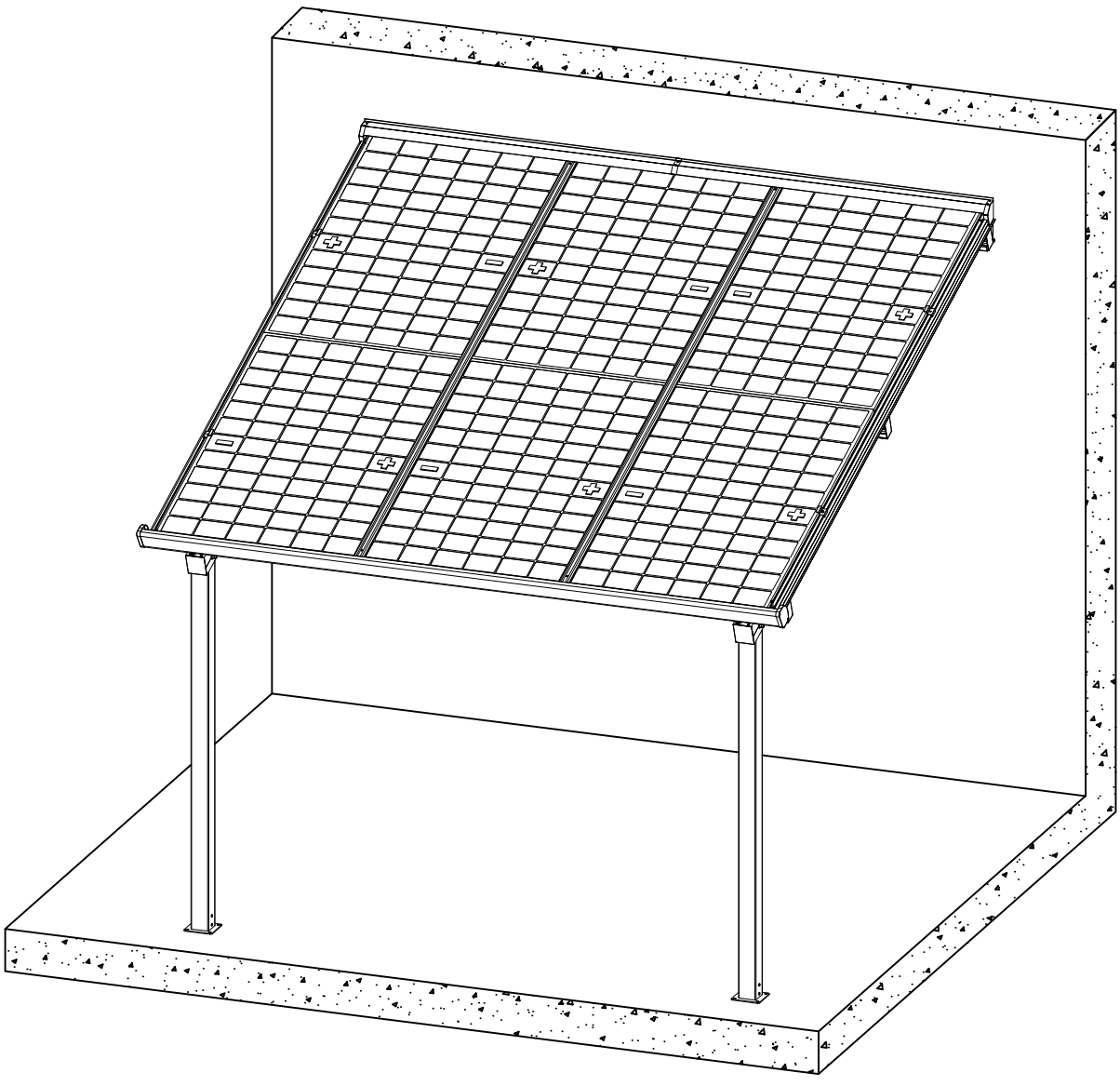

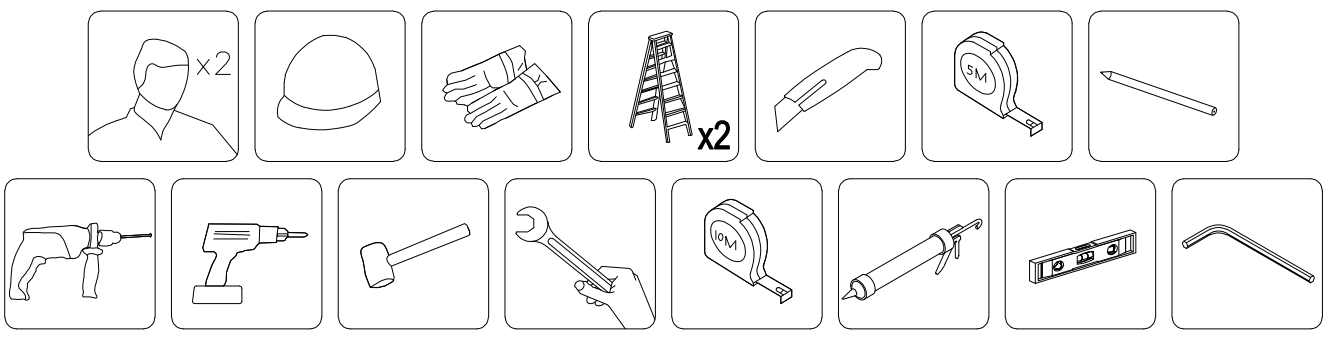

(cm)

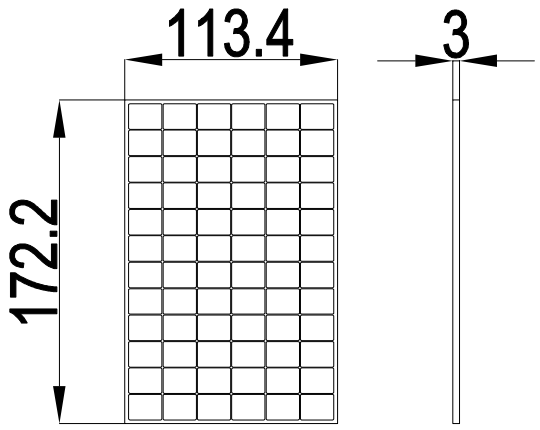

(Solar panel size)

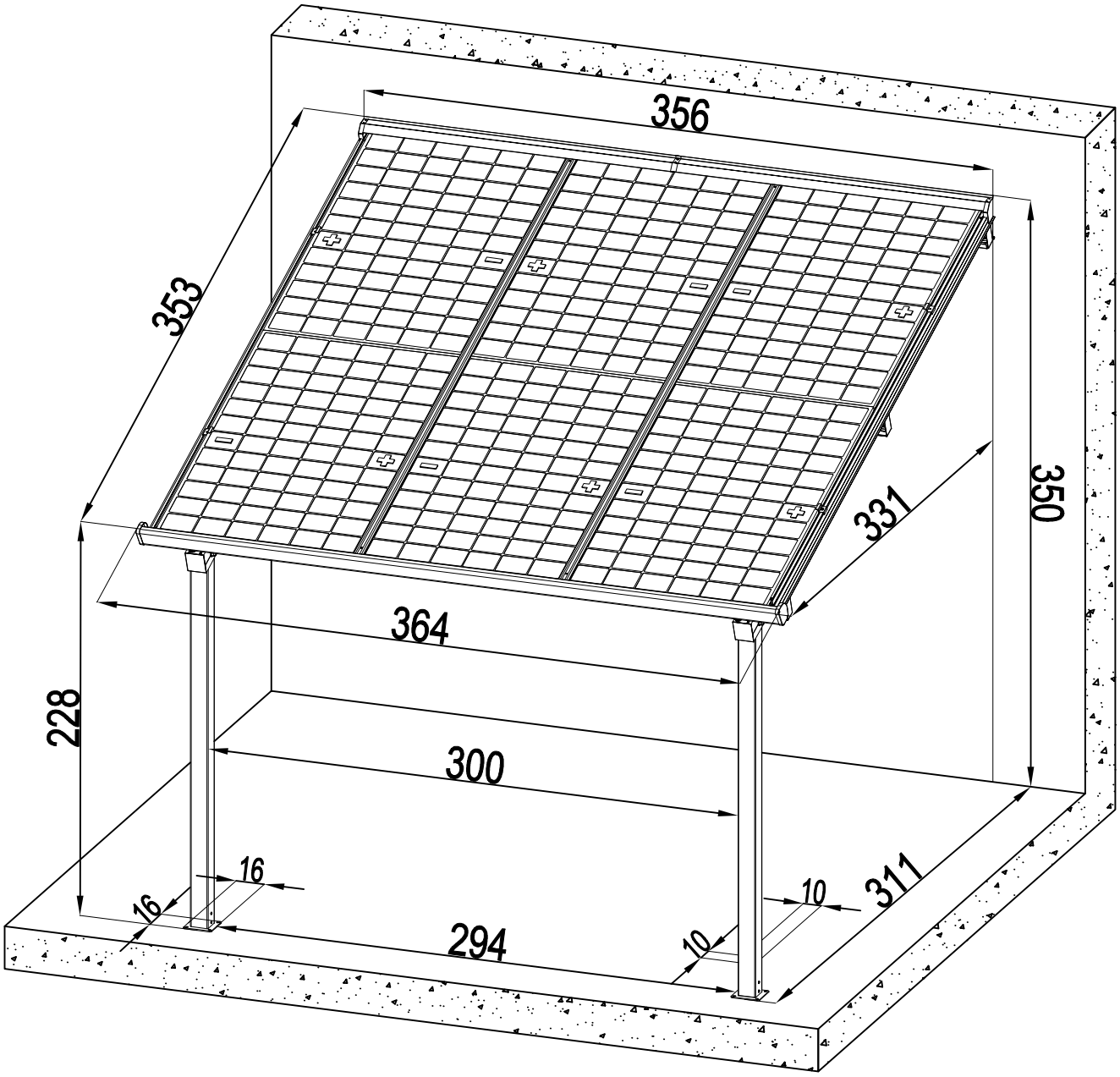

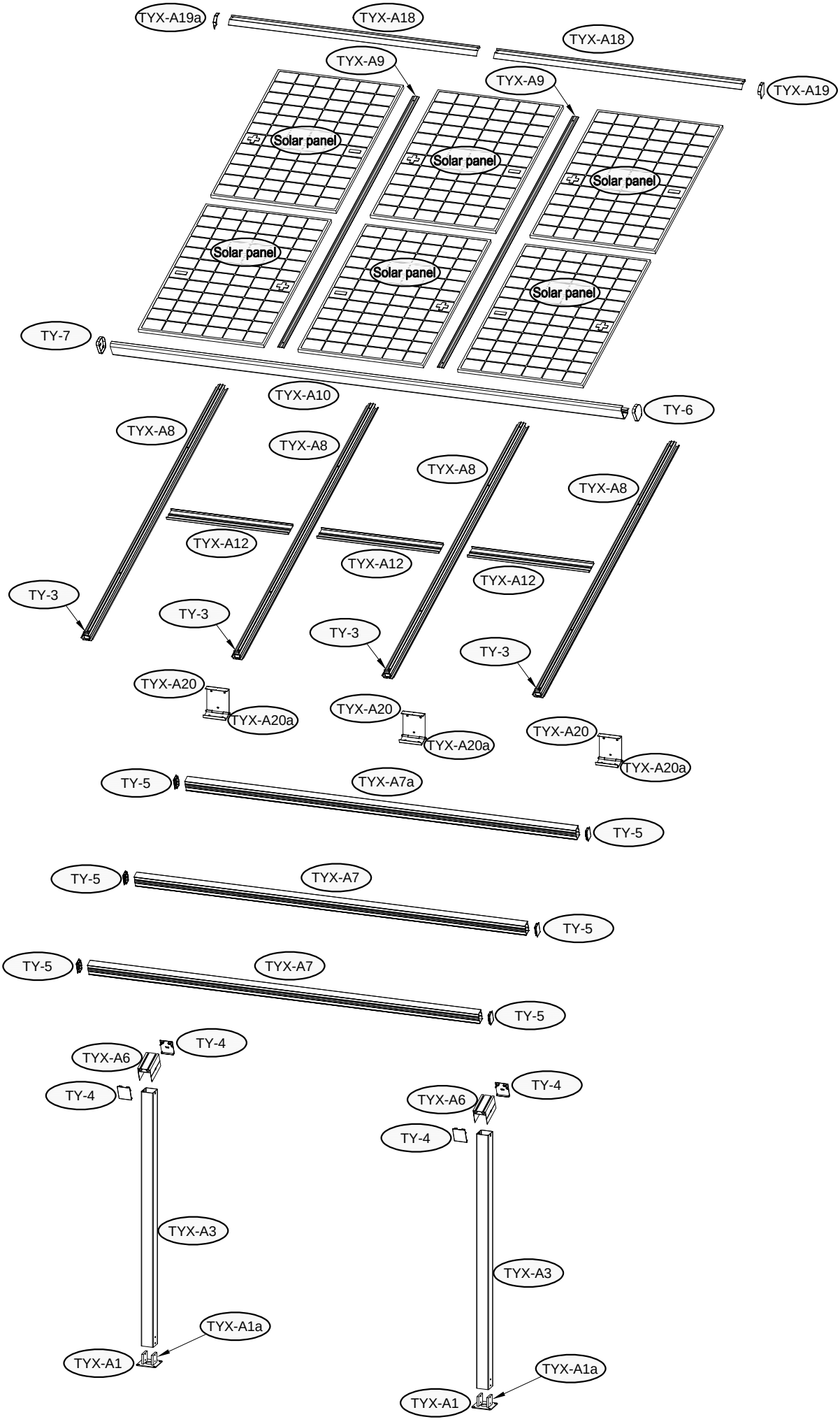
TYX-A19a
TYX-A18
TYX-A18
TYX-A9
TYX-A9
TYX-A19
Solar panel
Solar panel
Solar panel
Solar panel
Solar panel
Solar panel
TY-7
TY-6
TYX-A10
TYX-A8
TYX-A8
TYX-A8
TYX-A8
TYX-A12
TYX-A12
TYX-A12
TY-3
TY-3
TY-3
TY-3
TYX-A20
TYX-A20a
TYX-A20
TYX-A20a
TYX-A20
TYX-A20a
TY-5
TYX-A7a
TY-5
TY-5
TYX-A7
TY-5
TY-5
TYX-A7
TY-5
TY-4
TYX-A6
TY-4
TYX-A3
TYX-A1a
TYX-A1
TY-4
TYX-A6
TY-4
TYX-A3
TYX-A1a
TYX-A1

REF	IMATY	mm	QTY
TYX-A1		160	x2
TYX-A1a		86	x4
TYX-A3		2106	x2
TYX-A6		204	x2
TYX-A7		3569	x2
TYX-A7a		3569	x1
TYX-A8		3444	x4
TYX-A9		3444	x2
TYX-A10		3631	x1
TYX-A12		1102	x3
TY-A16		30	x38
TYX-A18		1795	x2
TYX-A19			x1
TYX-A19a			x1
TYX-A20			x3
TYX-A20a			x3
TY-1			x4
TY-2			x4
TY-3			x4
TY-4			x4
TY-5			x6
TY-6			x1
TY-7			x1
Ana-P1			x2
TYX-A40		M6x30	x14
TYX-A41		M6x50	x4
TYX-A42		M8x16	x4
TYX-A43		M8x20	x32
TYX-A44	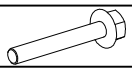	M16x130	x2
TYX-A46		M8x16	x6
TYX-A47		M8	x9

REF	IMATY	mm	QTY
TYX-A48		M16	x2
TYX-A49		M8	x36
TYX-A50		M8x70	x9
TYX-A51	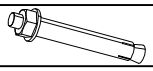	M12x200	x8
TYX-A52		ST4x10	x4
TYX-A53		ST4.2x13	x6
TYX-A54		ST4.8x16	x8
TYX-A55		M8x20	x8
TYX-A56		M8x20	x8
TYX-A58		M8x210	x3
Solar panel			
TY-A61			x6

1				
	TYX-A1 x2	TYX-A1a x4	TYX-A56 x8	

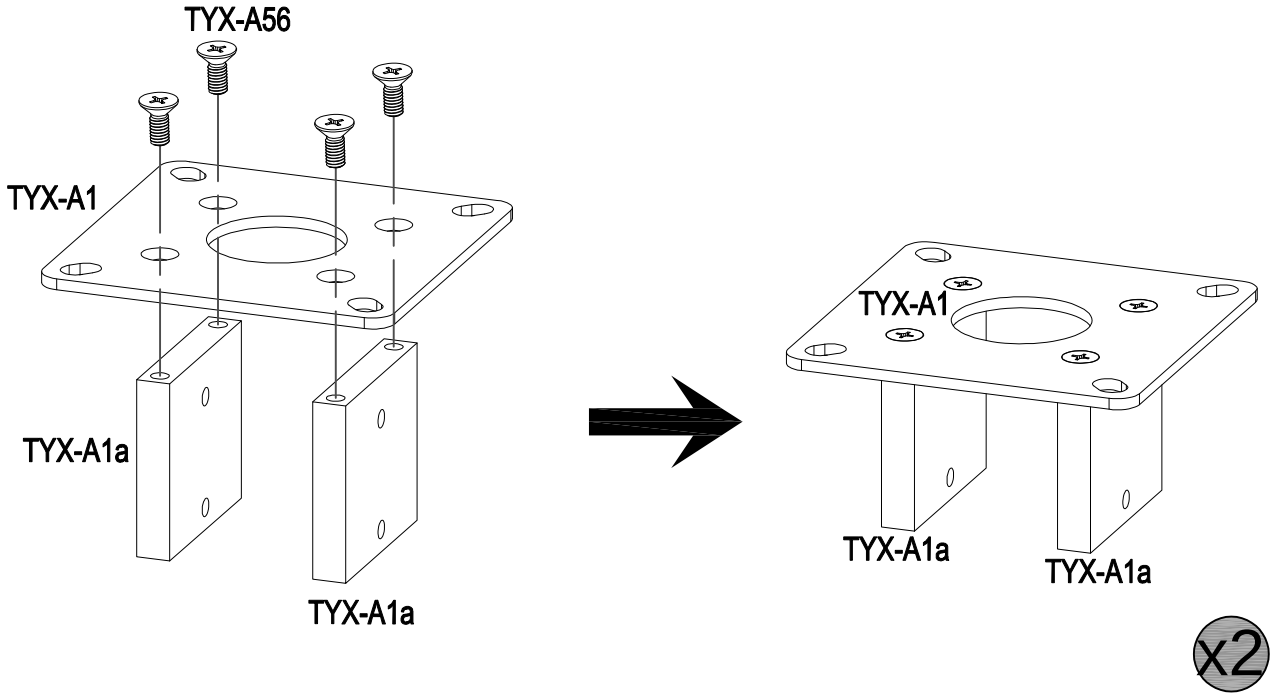

2					
	TYX-A20 x3	TYX-A20a x3	TYX-A58 x3	TYX-A47 x3	

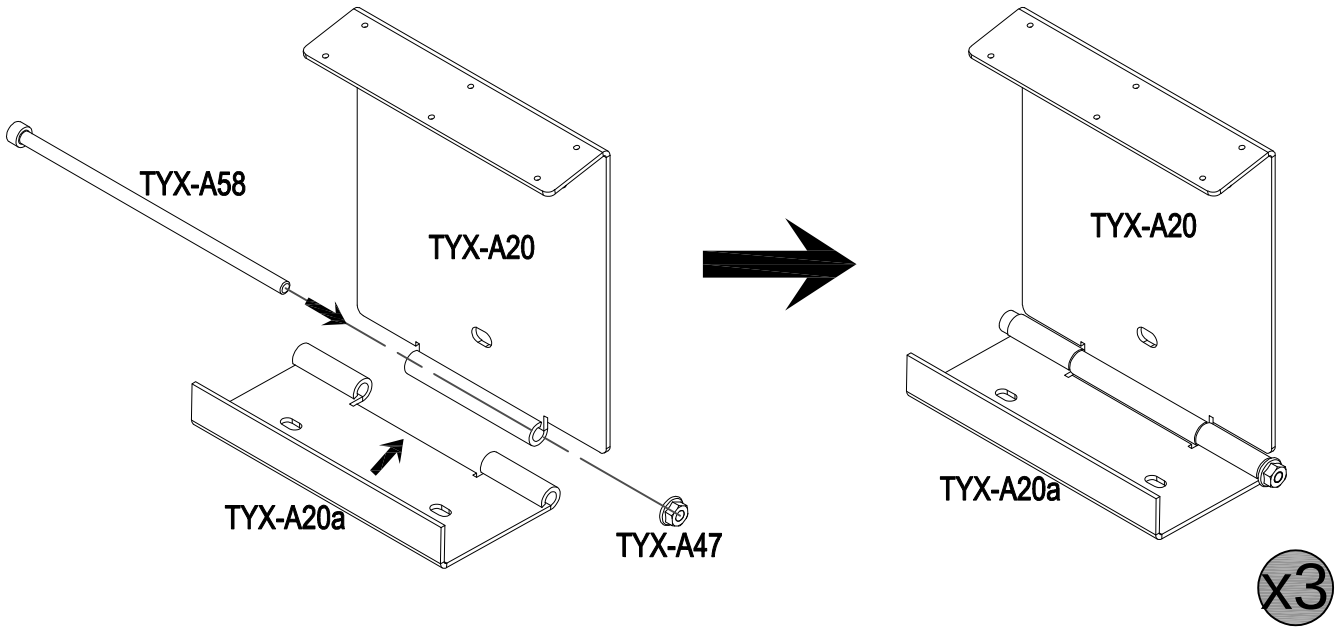

3						
	TYX-A3 x2	TYX-A6 x2	TYX-A55 x8	TYX-A44 x2	TYX-A48 x2	

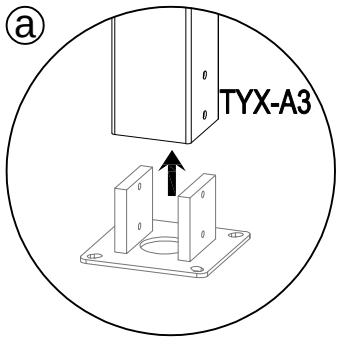

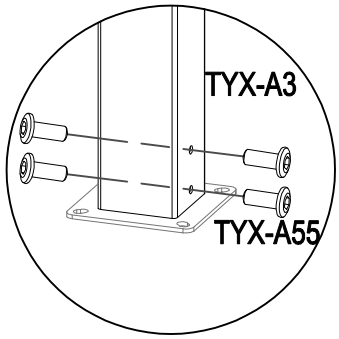

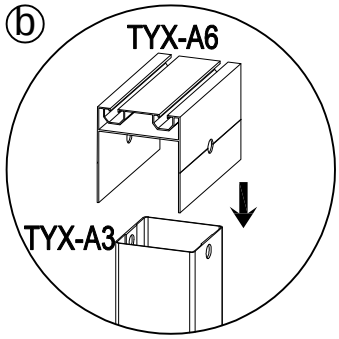

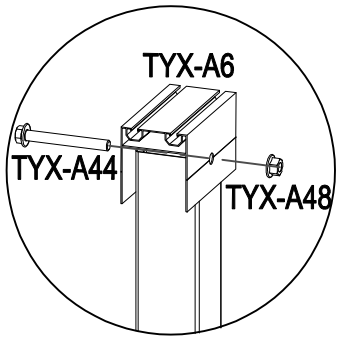

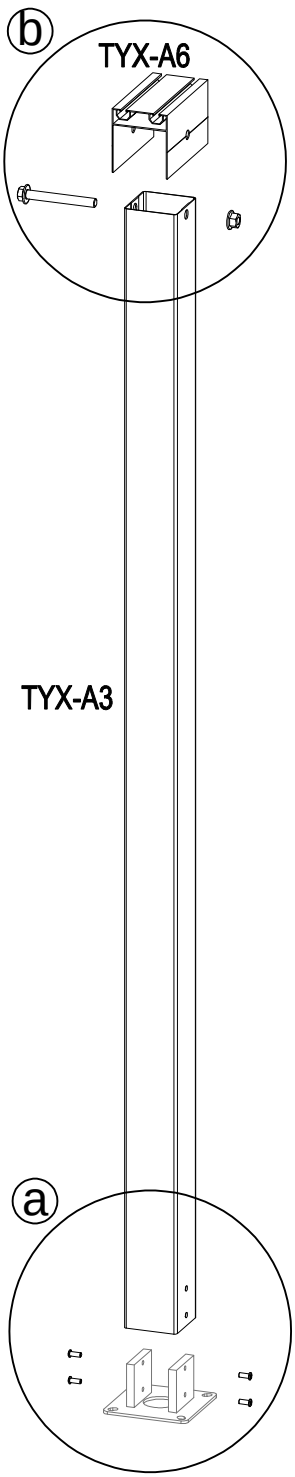

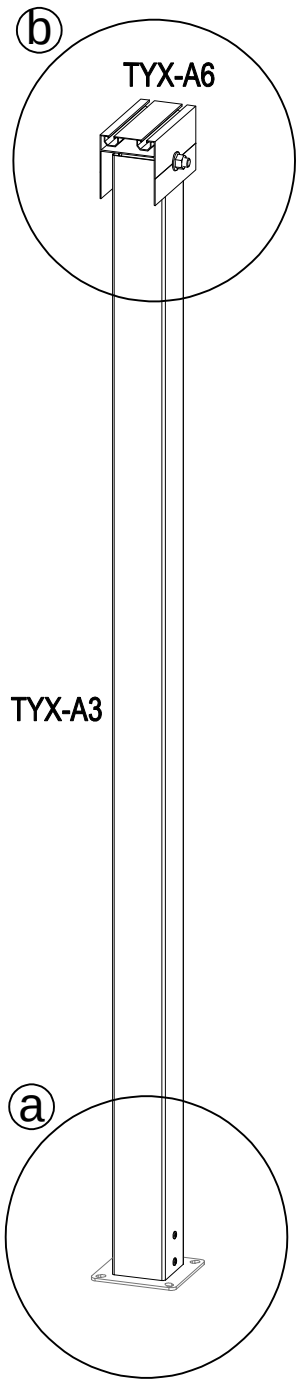

x2

4	TY-A16 x32	TYX-A49 x32	TYX-A43 x32	TYX-A7 x1	

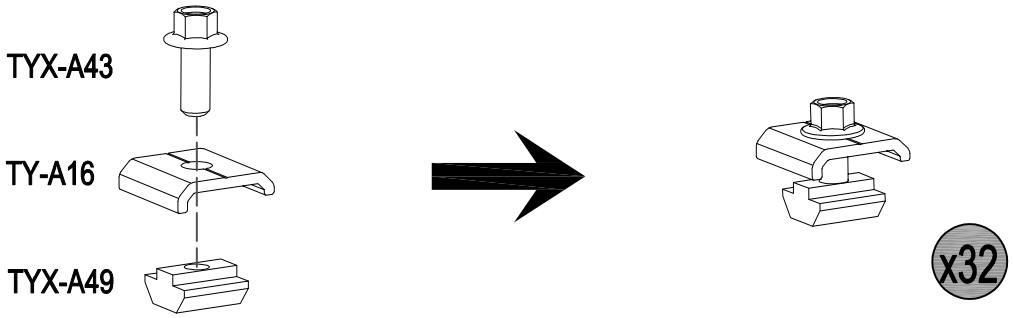

(mm)

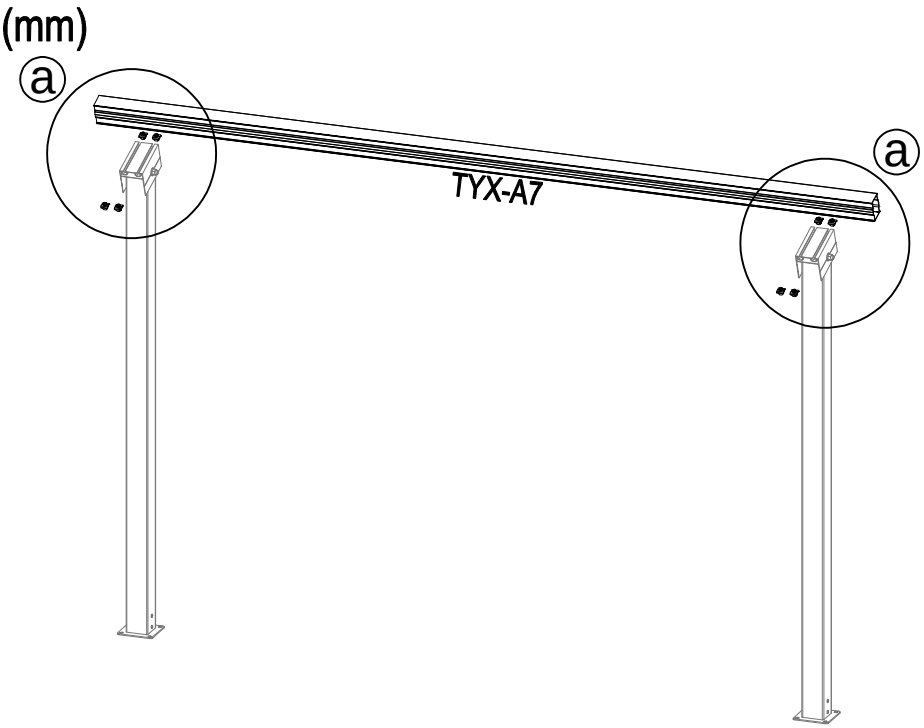

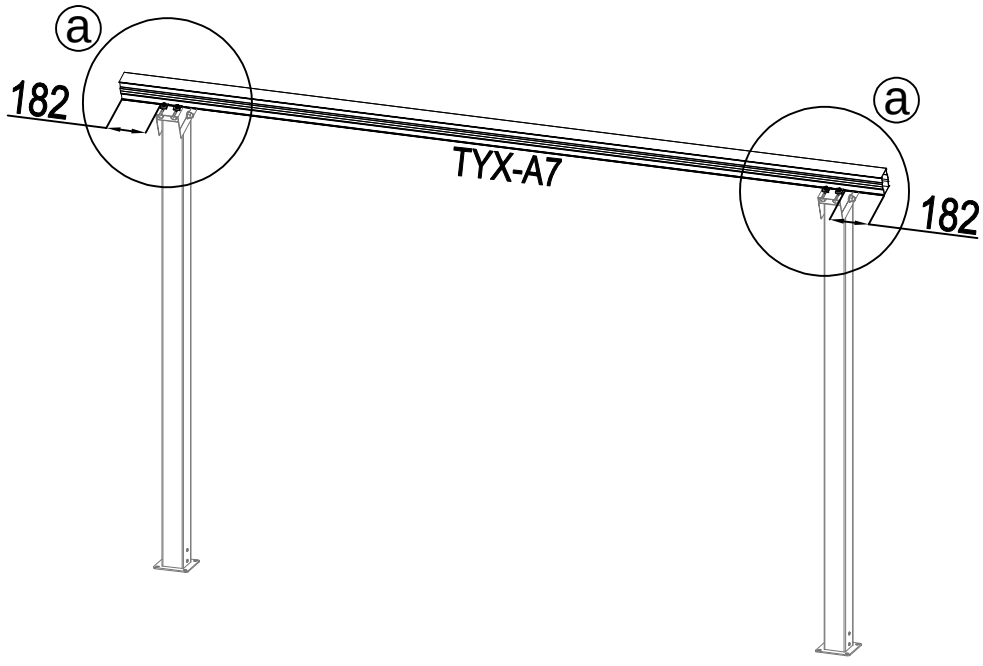

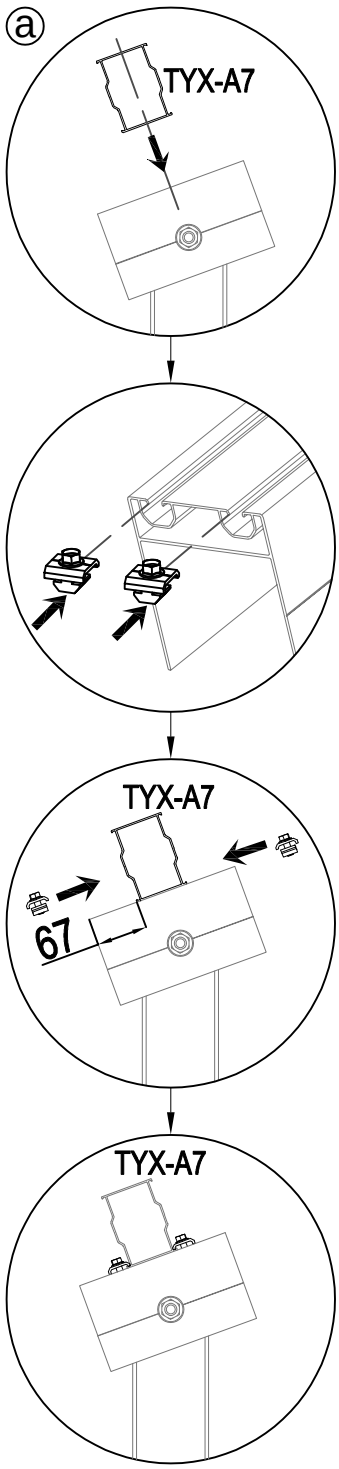

5	TYX-A7a x1	TYX-A40 x6	TYX-A8 x4	x24	

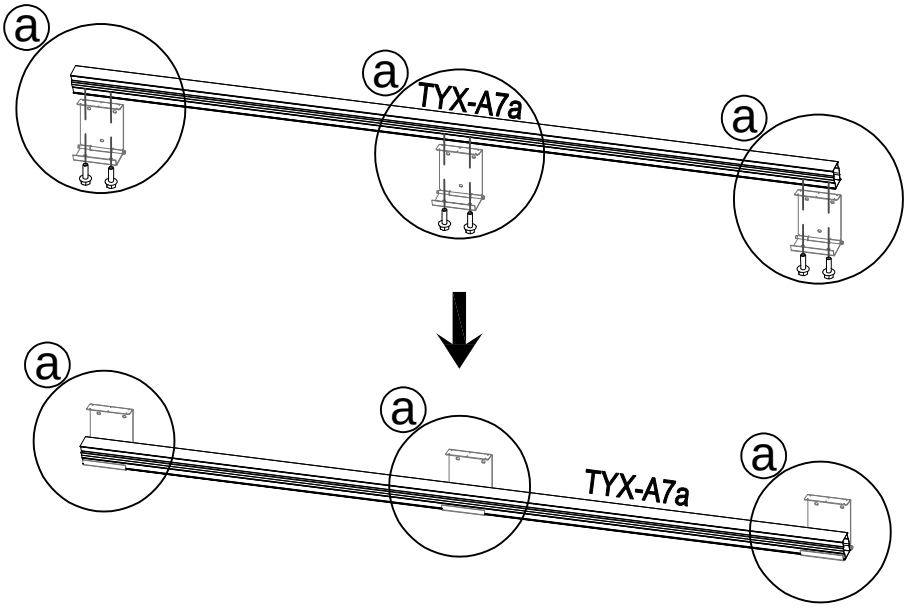

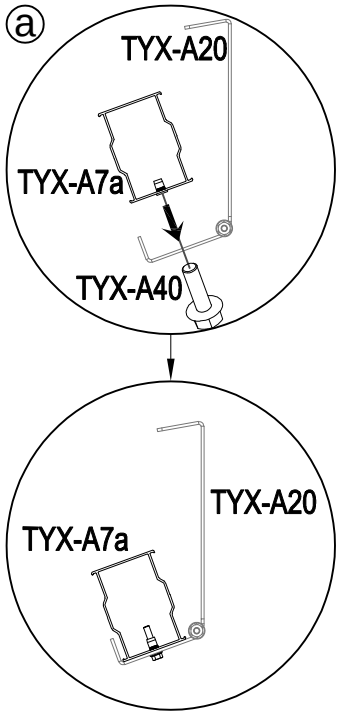

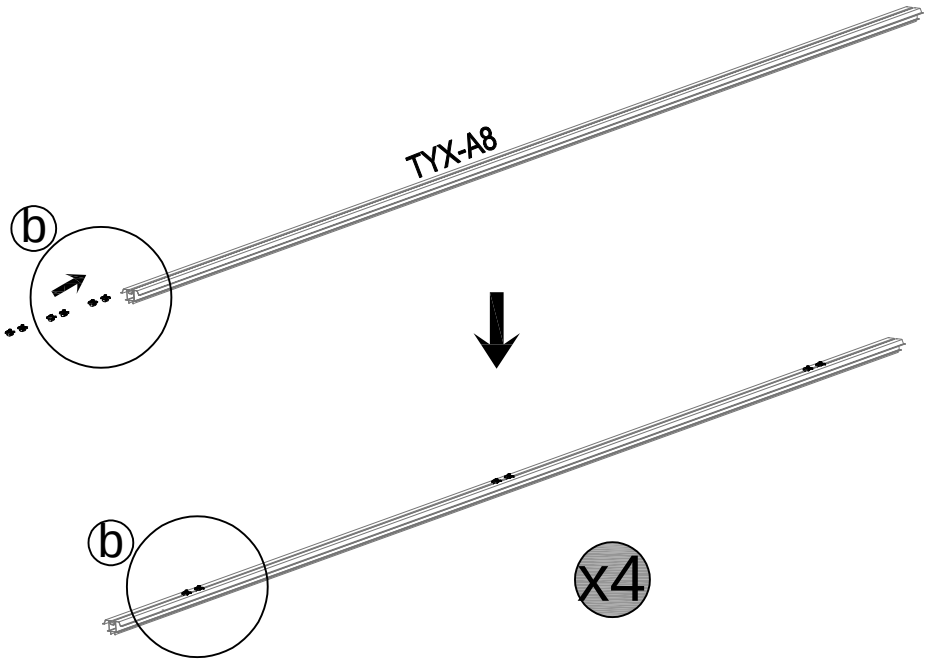

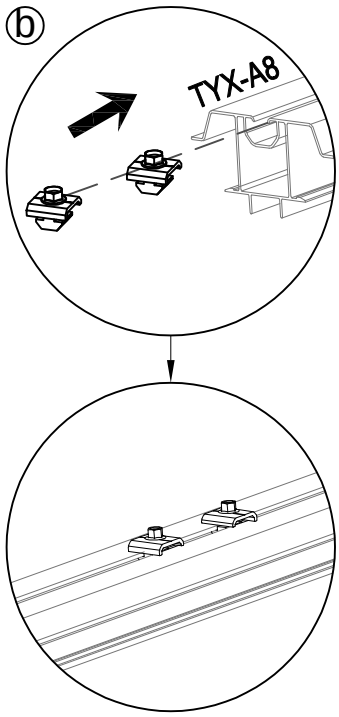

6

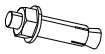
TYX-A50 x9


TYX-A18 x2


TYX-A53 x2

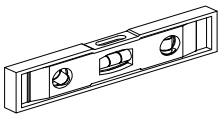

(cm)

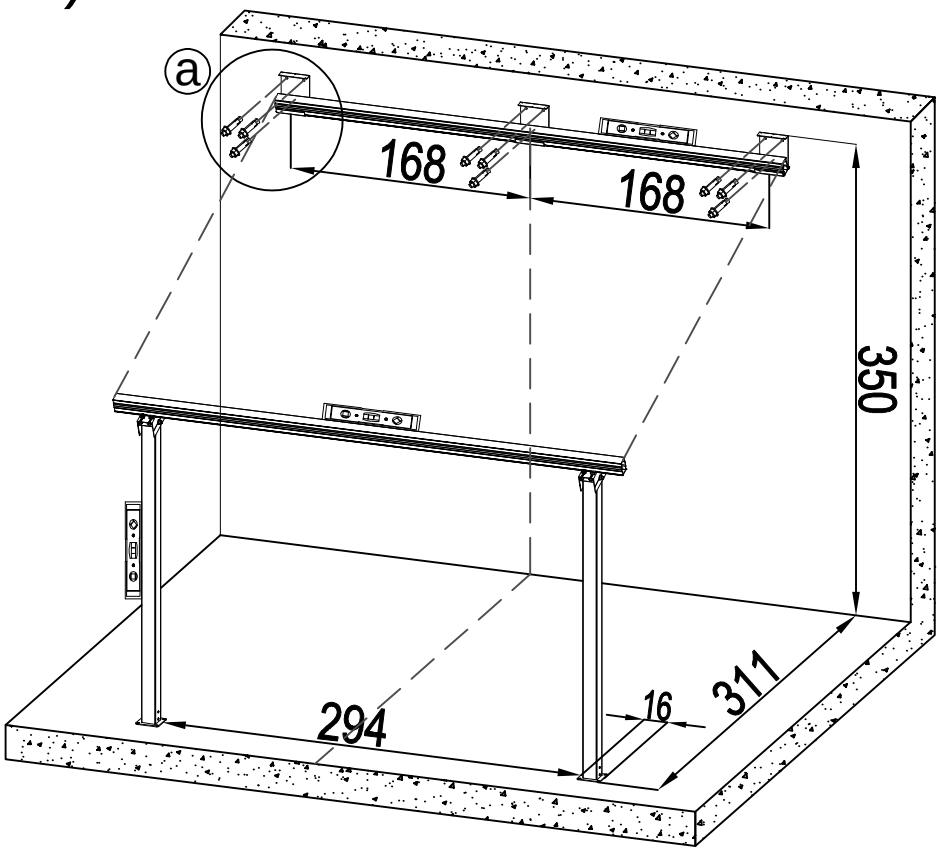

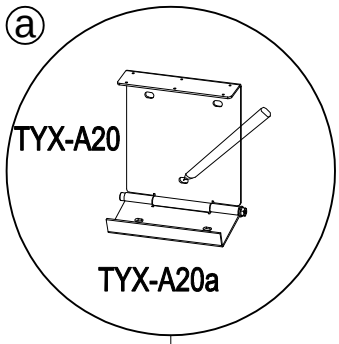

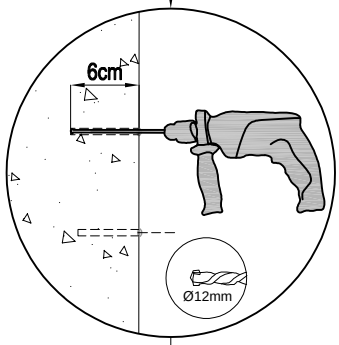

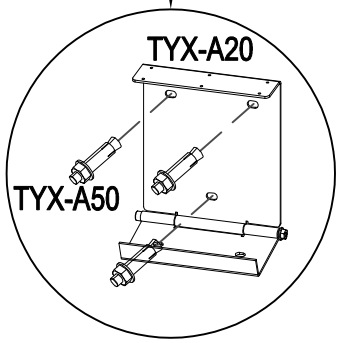

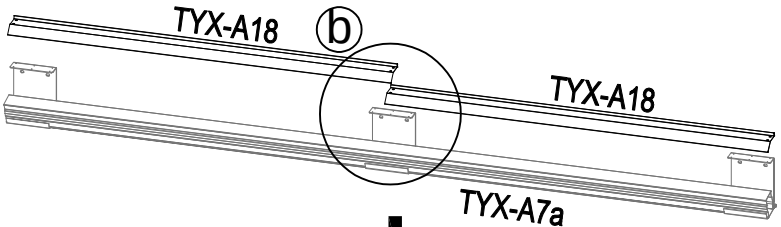

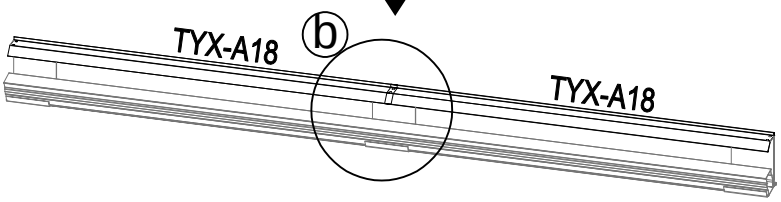

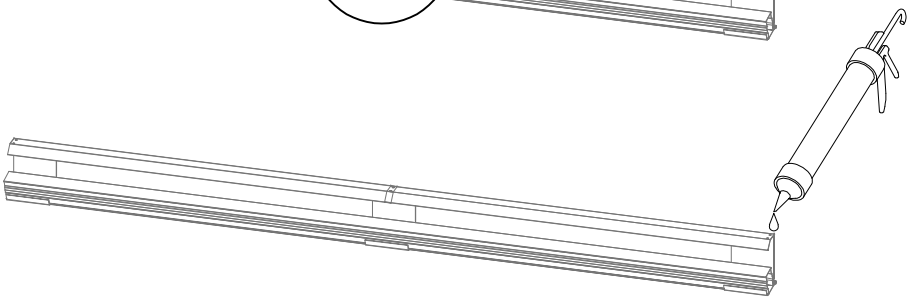

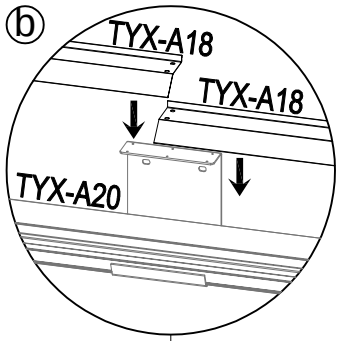

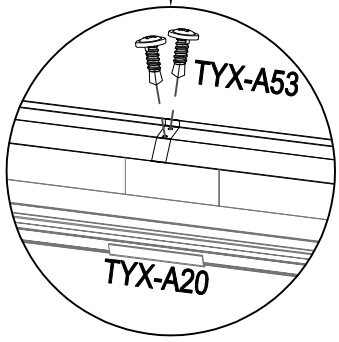

7

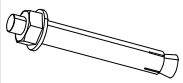

TYX-A51 x8

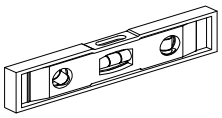

(cm)

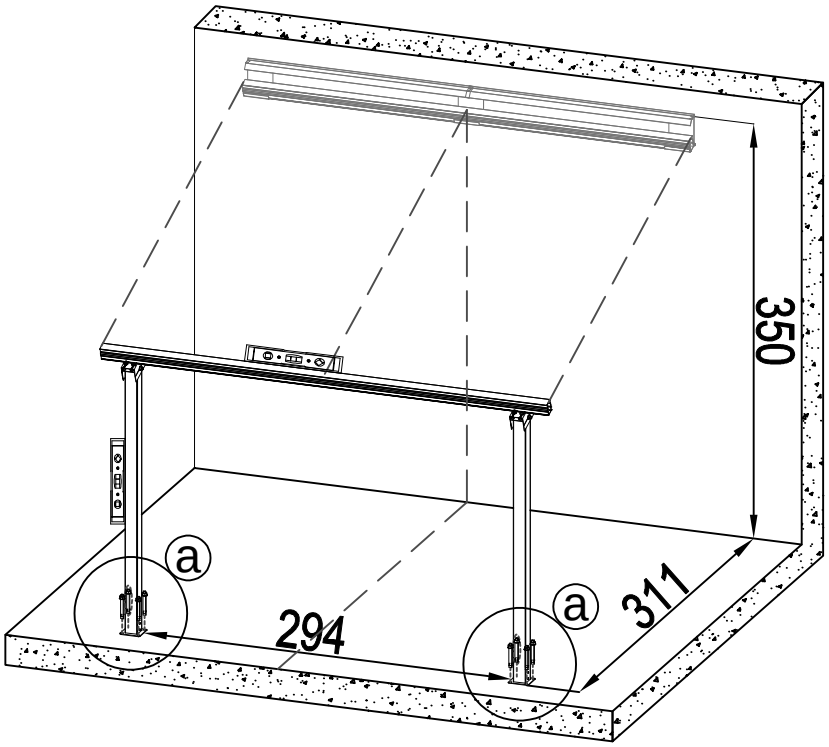

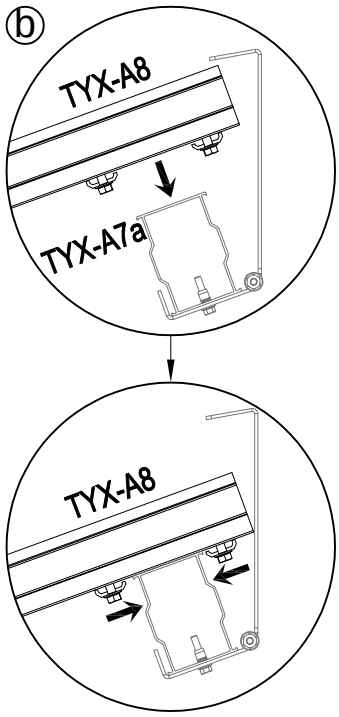

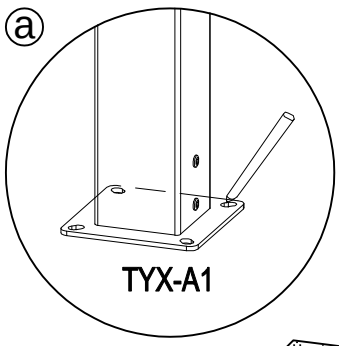

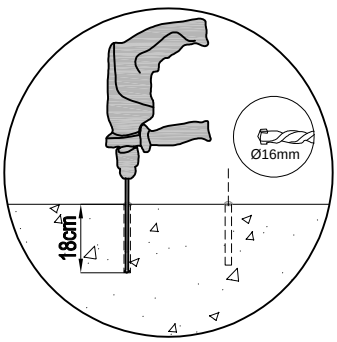

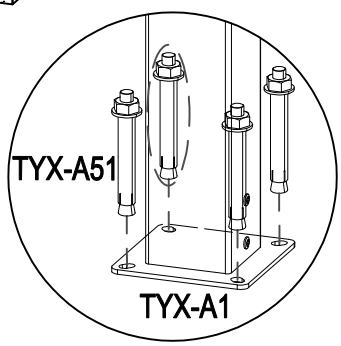

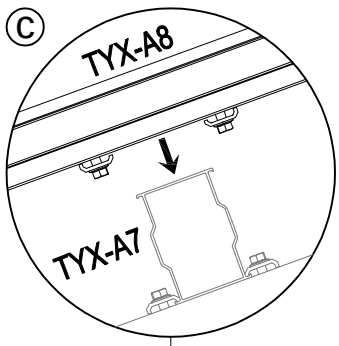

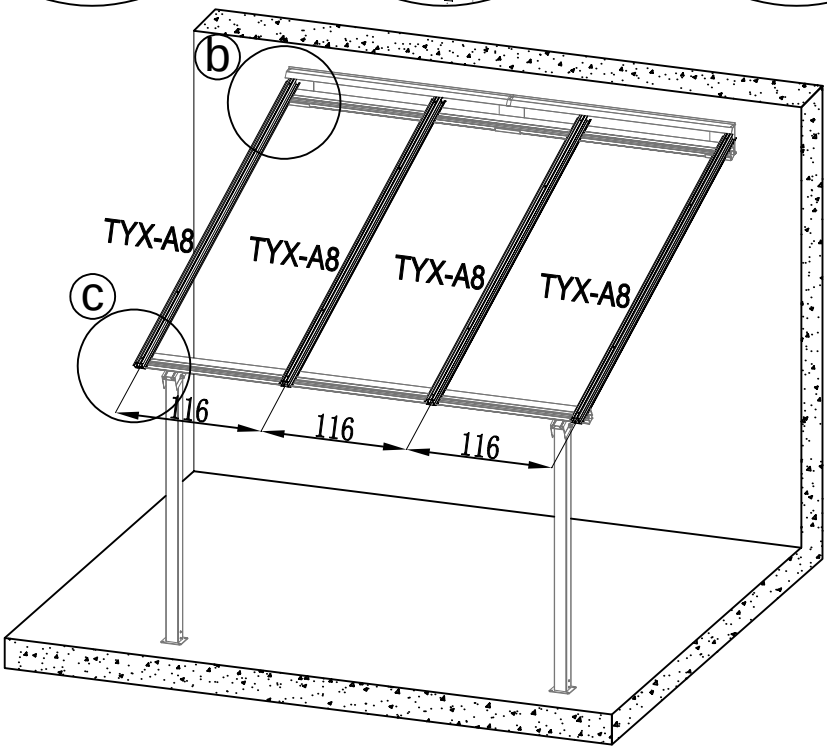

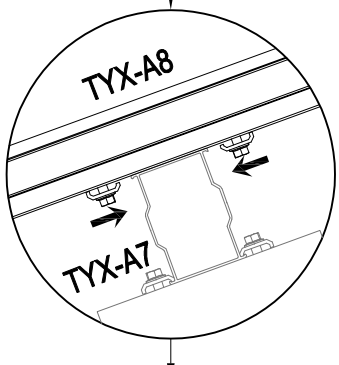

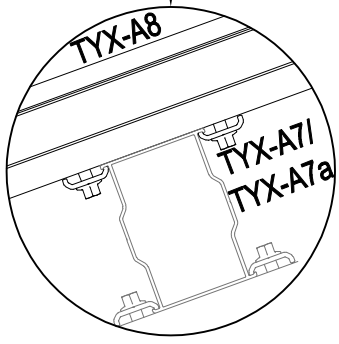

8

(cm)

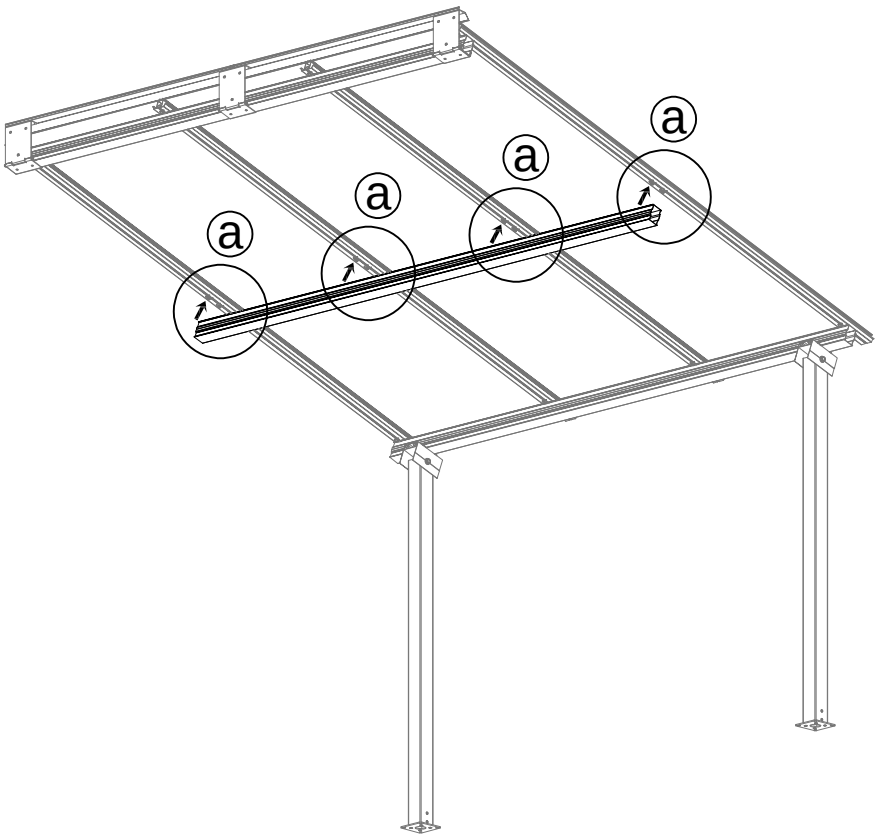

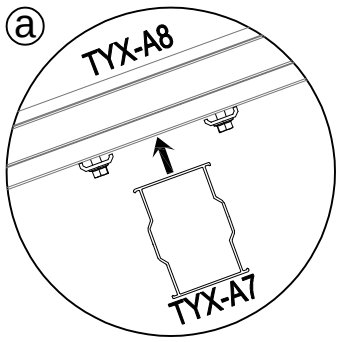

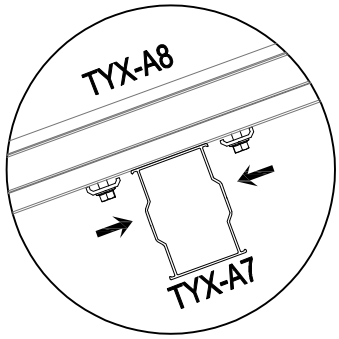

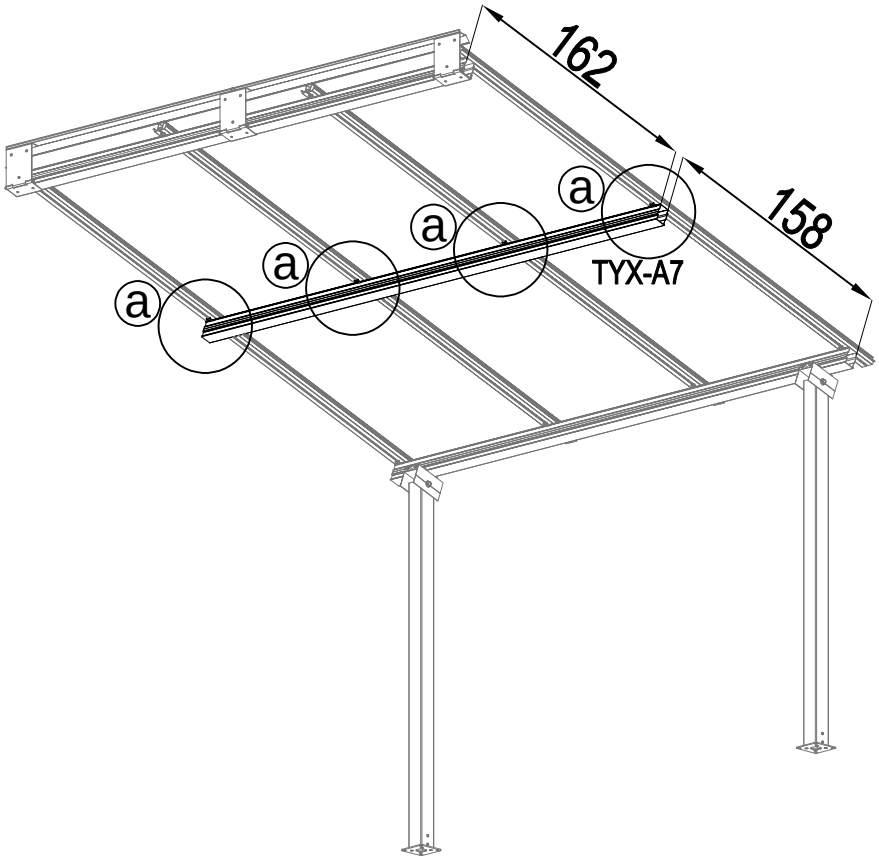

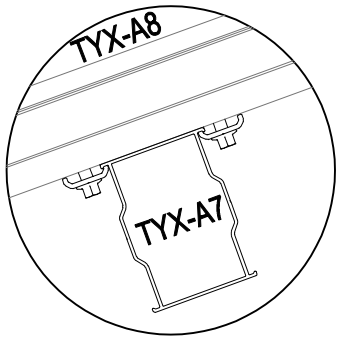

9	Solar panel x4	TY-1 x2	TY-2 x2	TY-3 x4	TYX-A40 x4	TYX-A54 x8	

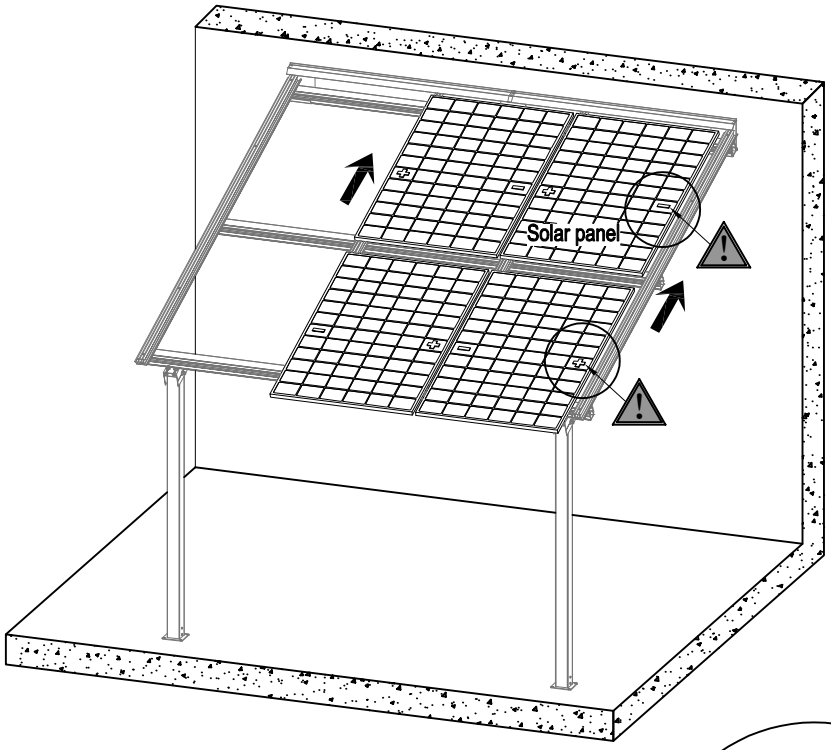

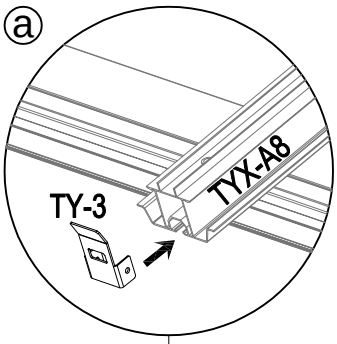

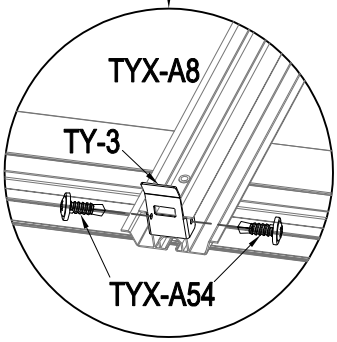

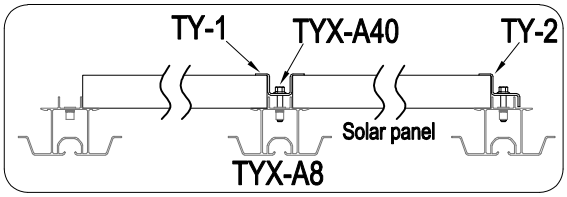

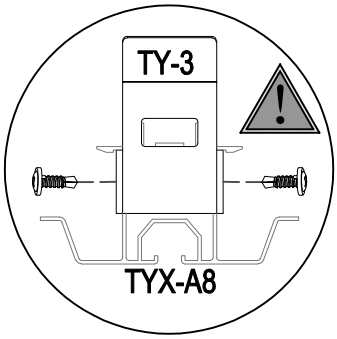

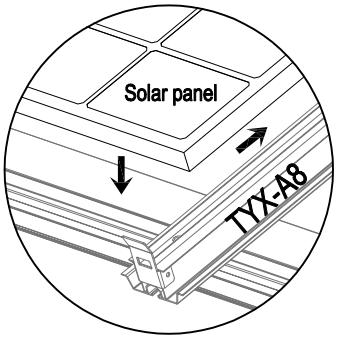

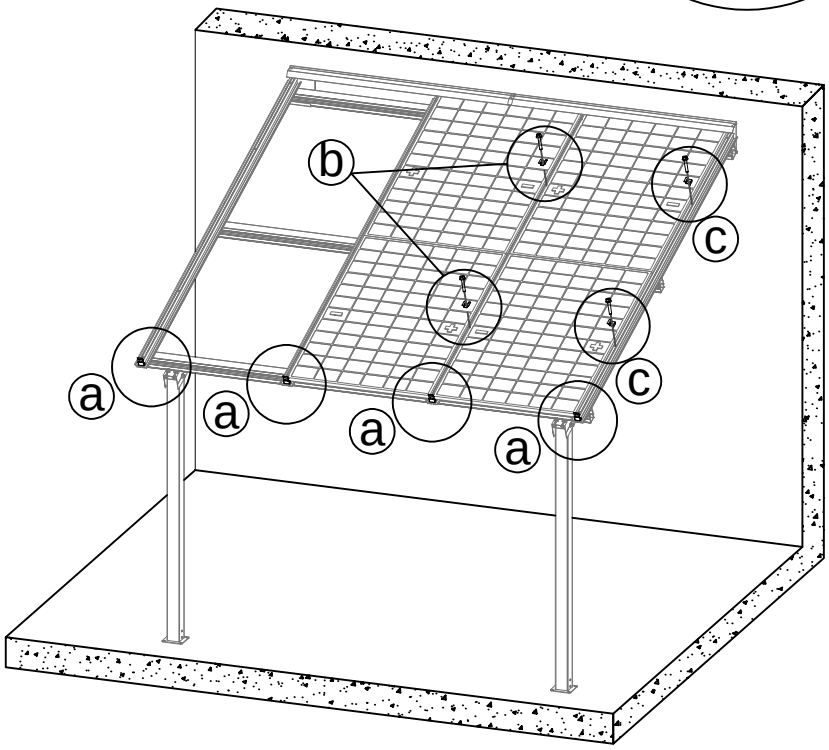

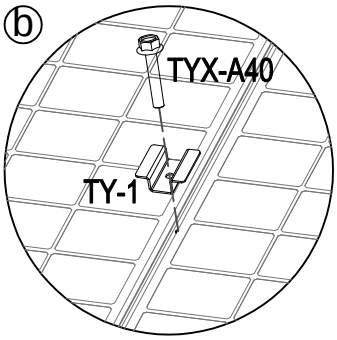

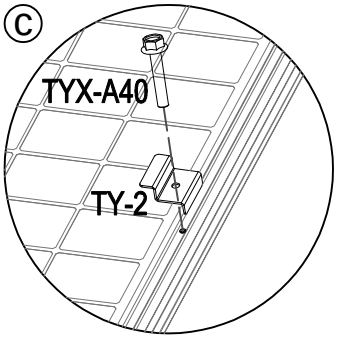

10	Solar panel x2	TY-1 x2	TY-2 x2	TYX-A40 x4	

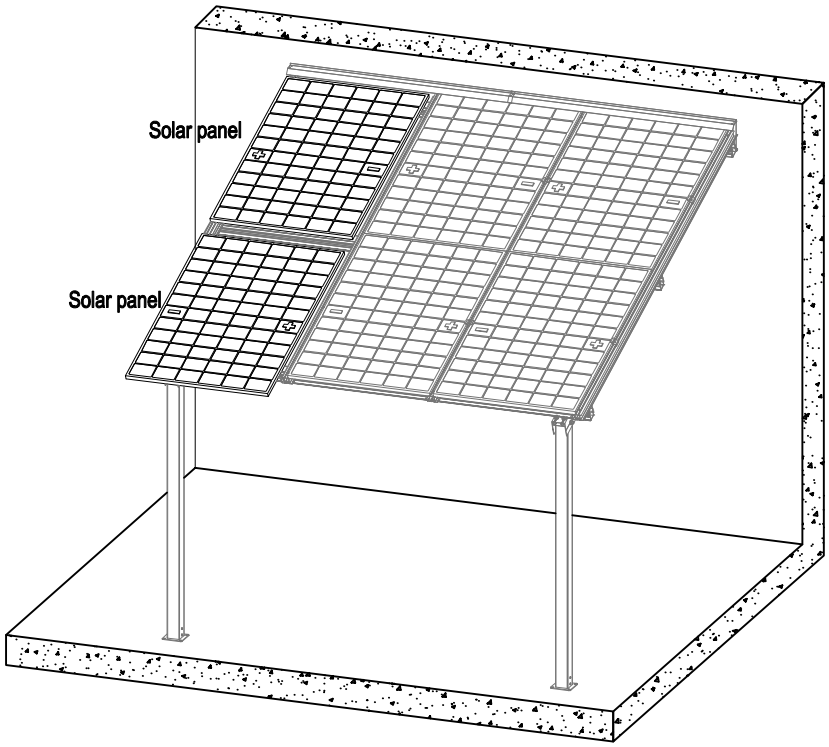

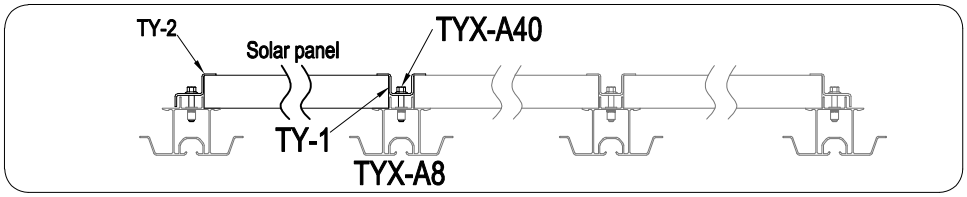

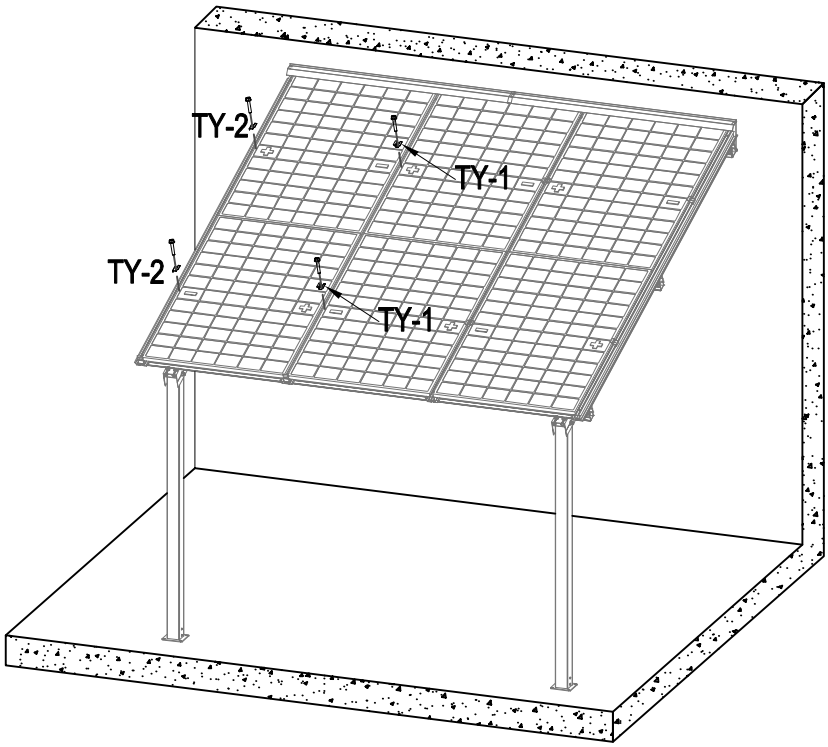

11

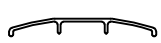

TYX-A9 x2

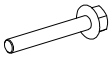

TYX-A41 x4

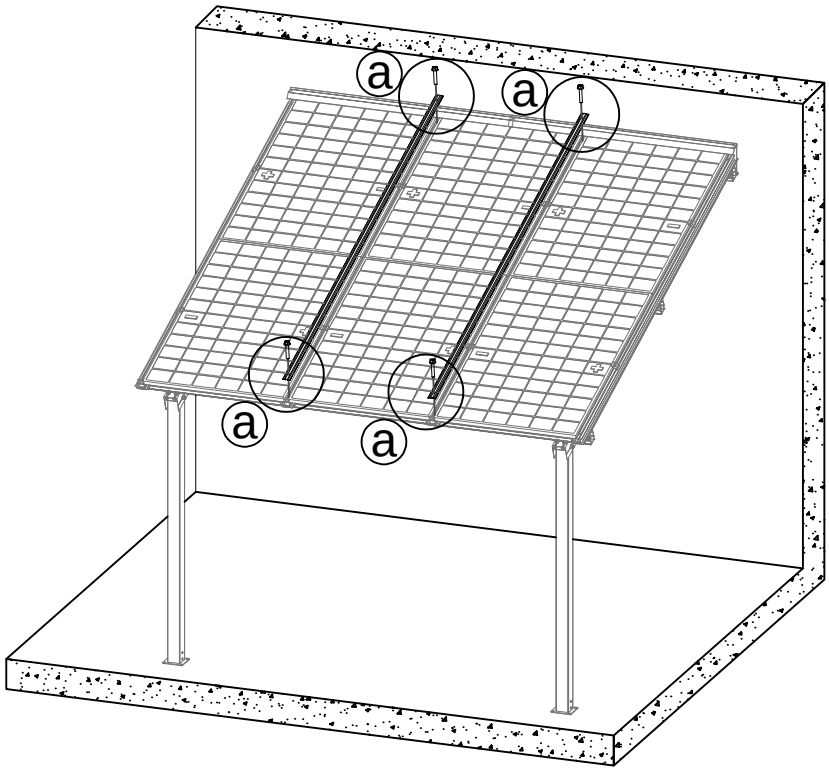

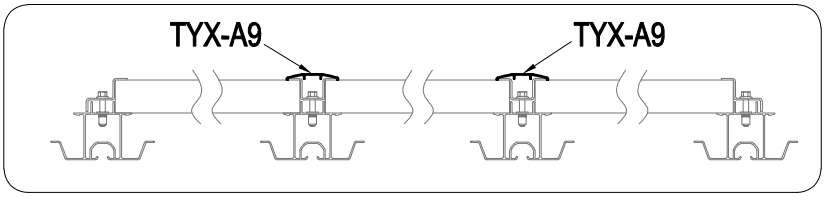

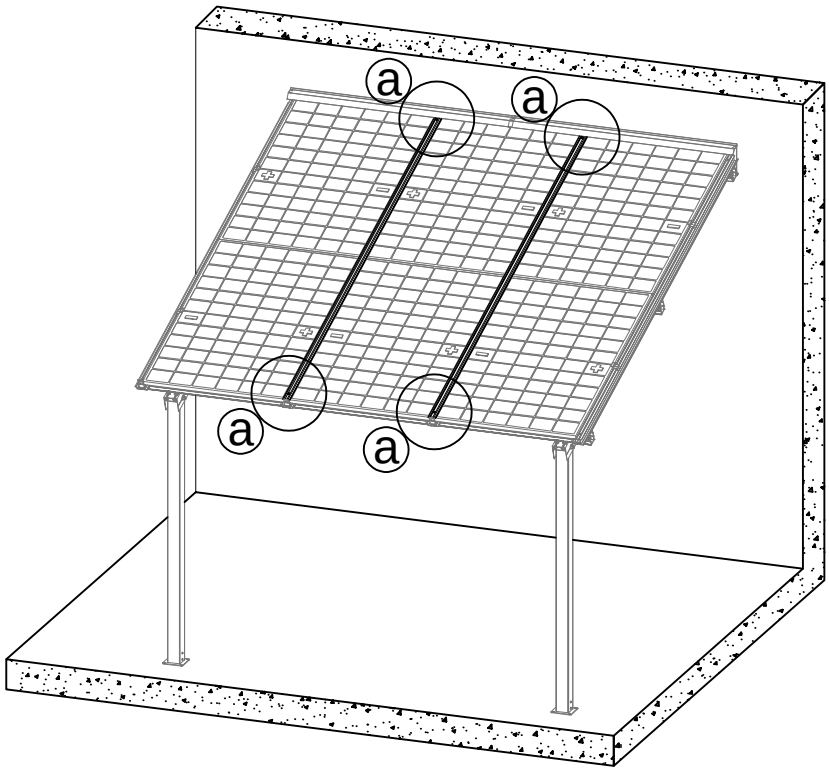

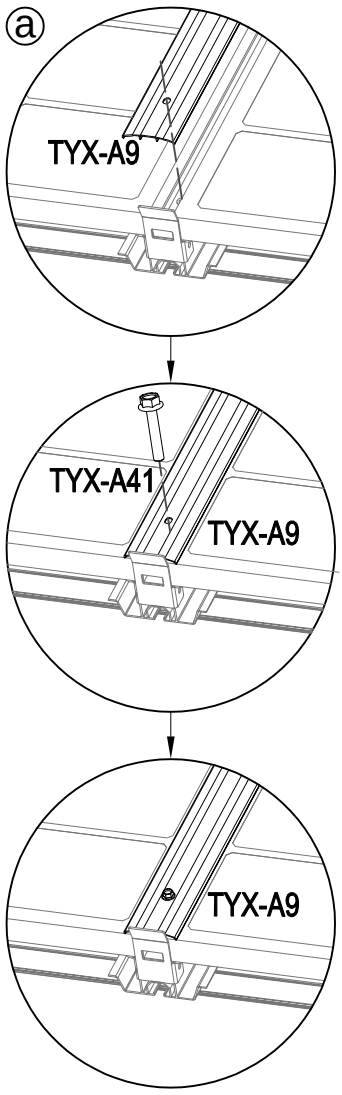

12	TYX-A12 x3	TY-A16 x6	TYX-A46 x6	TYX-A47 x6	

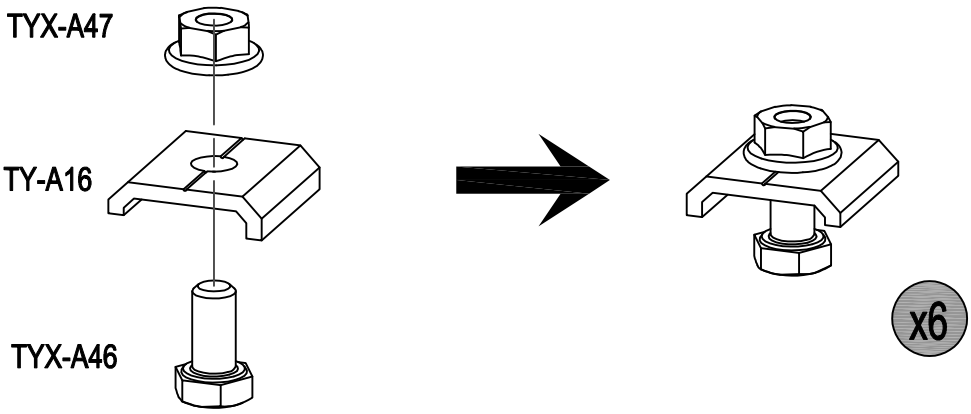

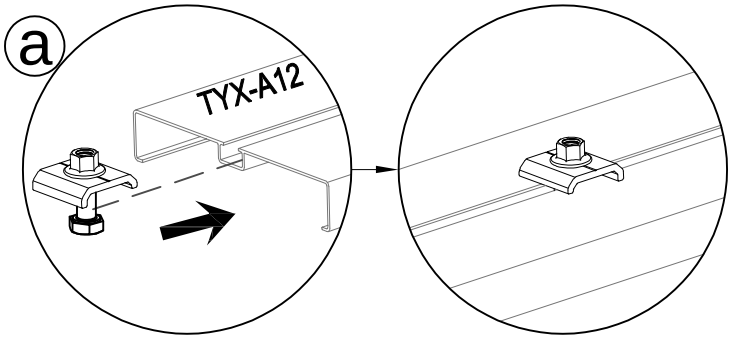

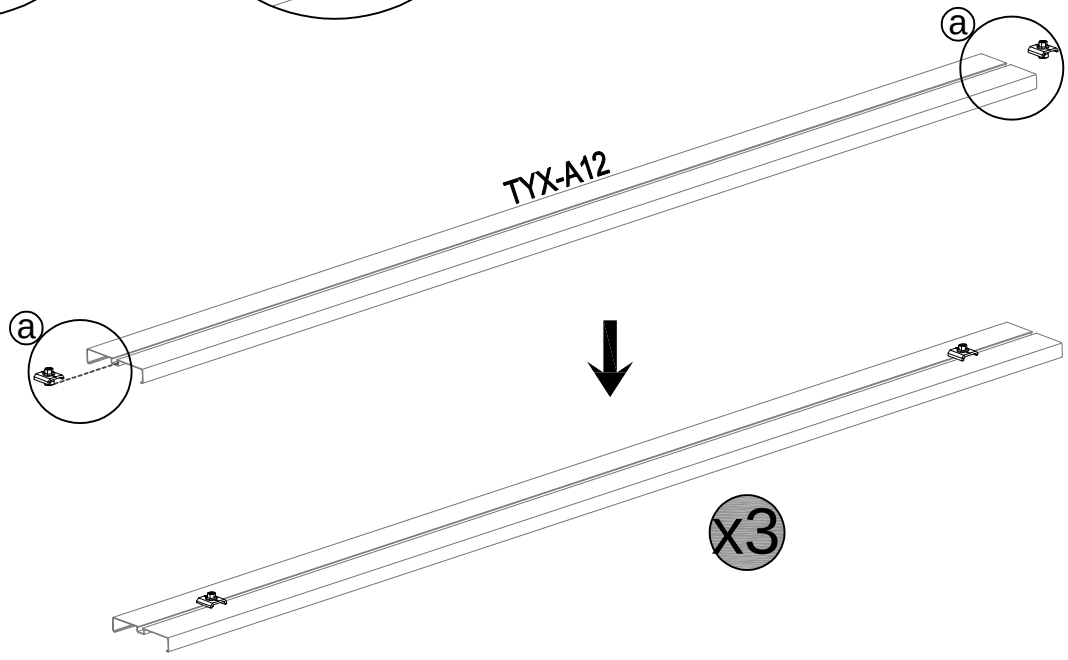

13

(cm)

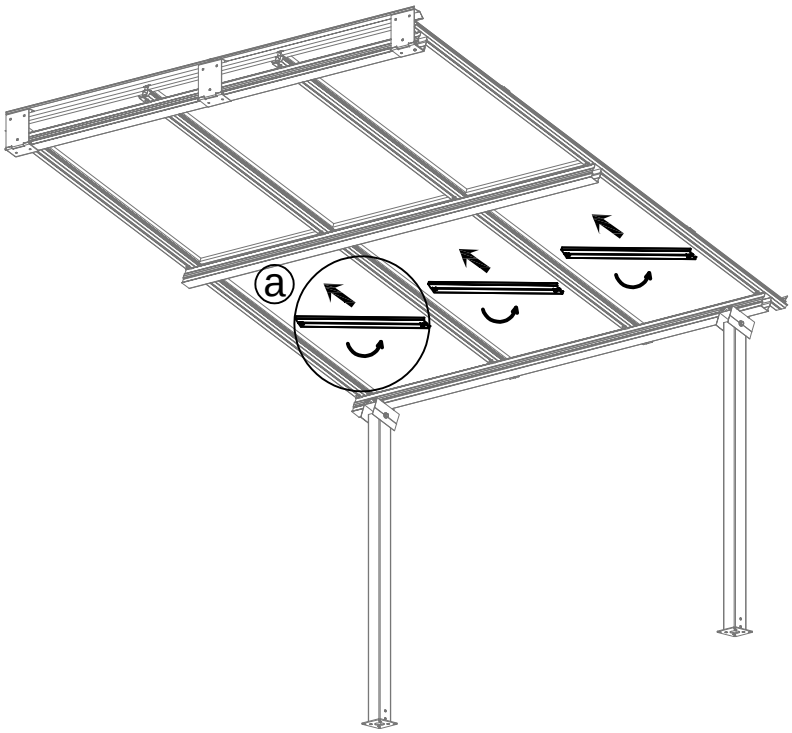
ⓐ

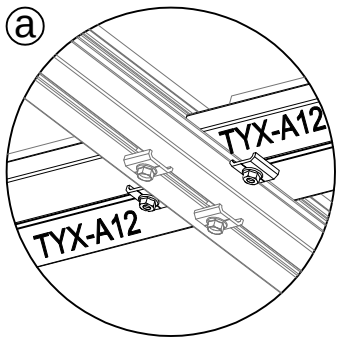
ⓐ
TYX-A12
TYX-A12

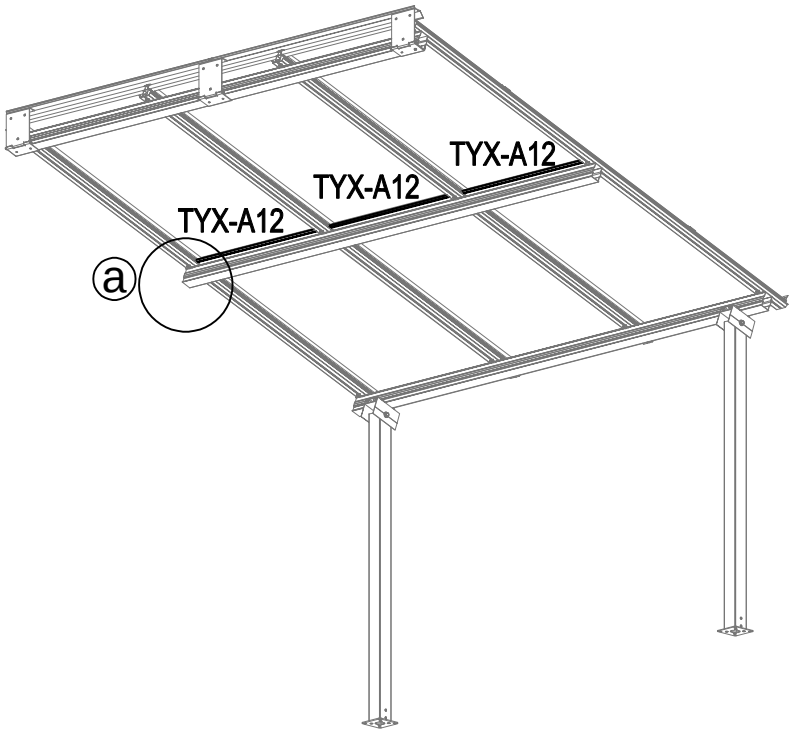
TYX-A12
TYX-A12
TYX-A12
ⓐ

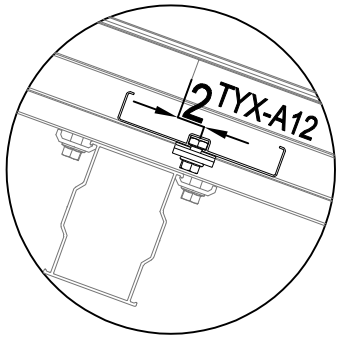
2
TYX-A12

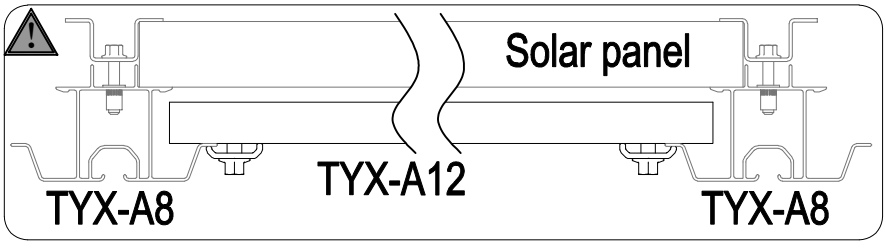
Solar panel
TYX-A8
TYX-A12
TYX-A8

14	TYX-A10 x1	Ana-P1 x2	

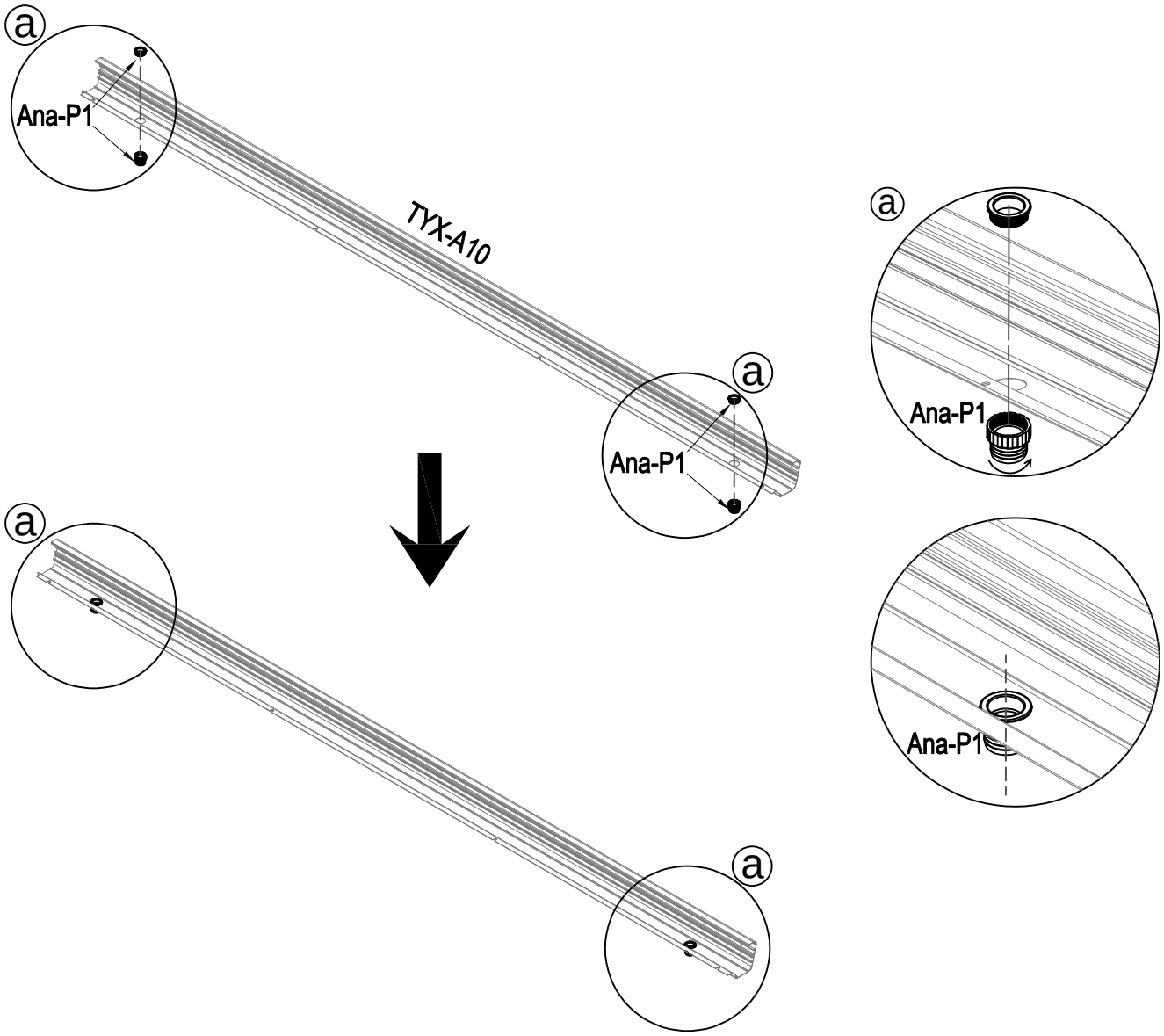

15	TYX-A42 x4	TYX-A49 x4	

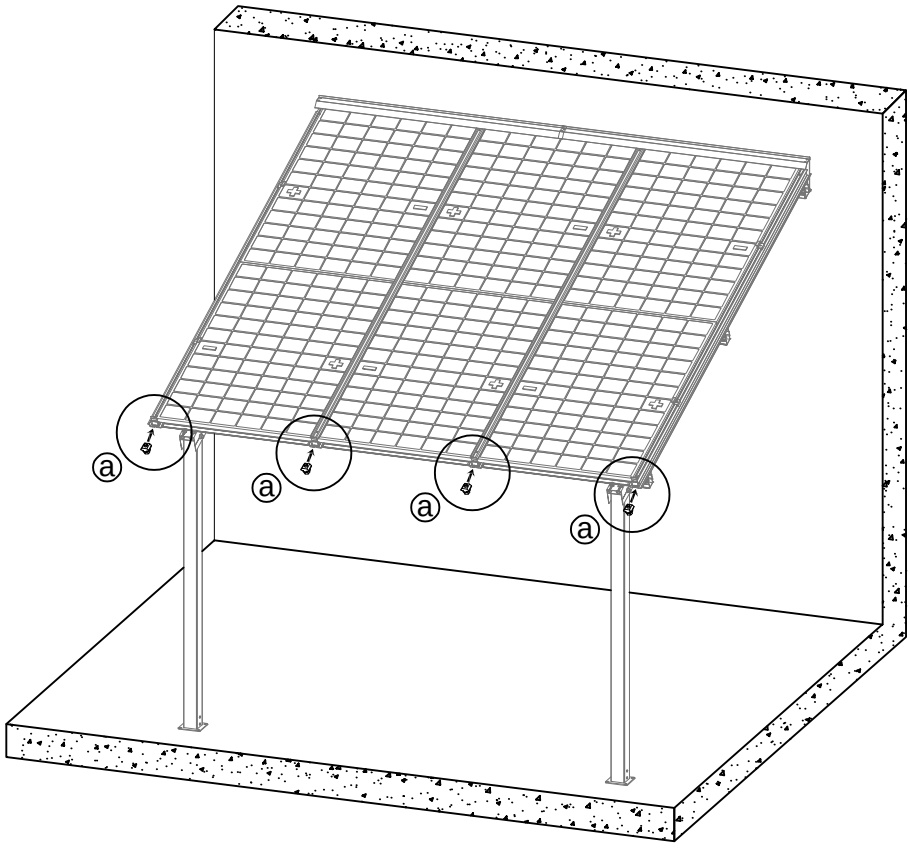

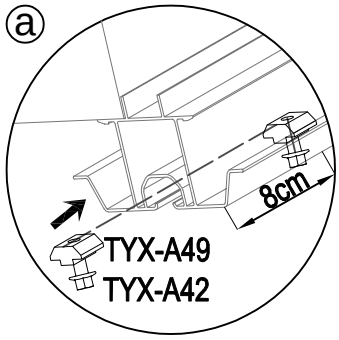

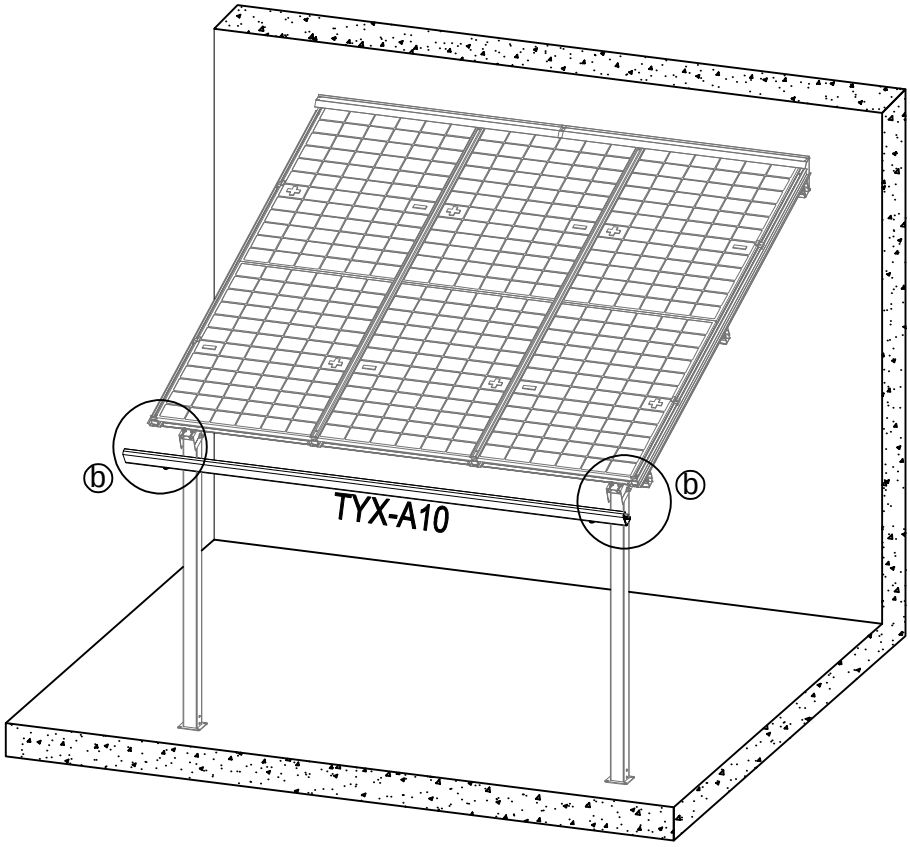

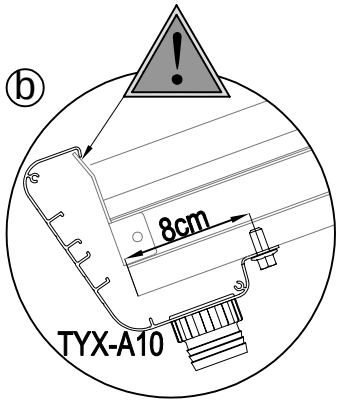

16						
 TY-6 x1	 TY-7 x1	 TYX-A19 x1	 TYX-A19a x1	 TYX-A52 x4	 TYX-A53 x4	

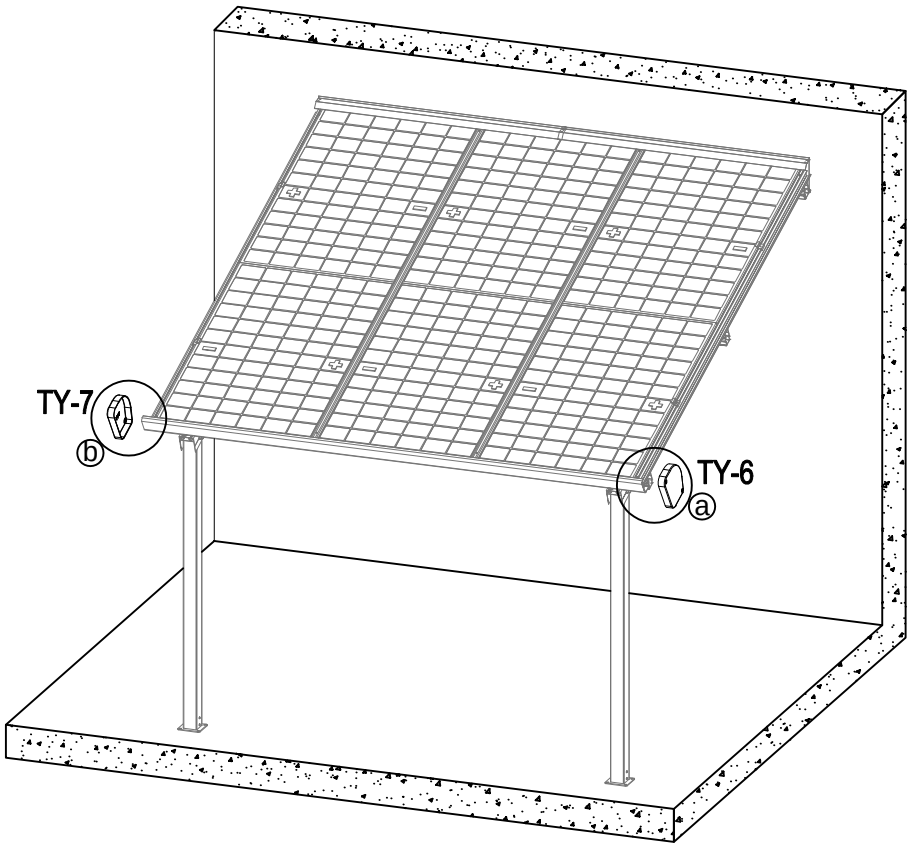

ⓐ

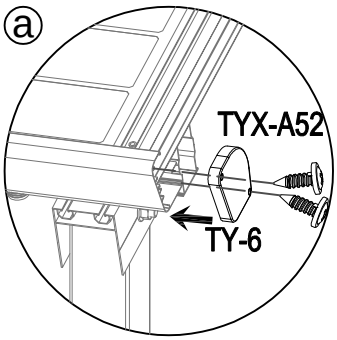

ⓑ

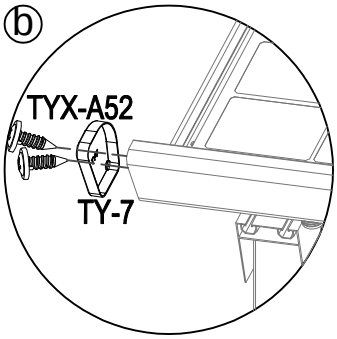

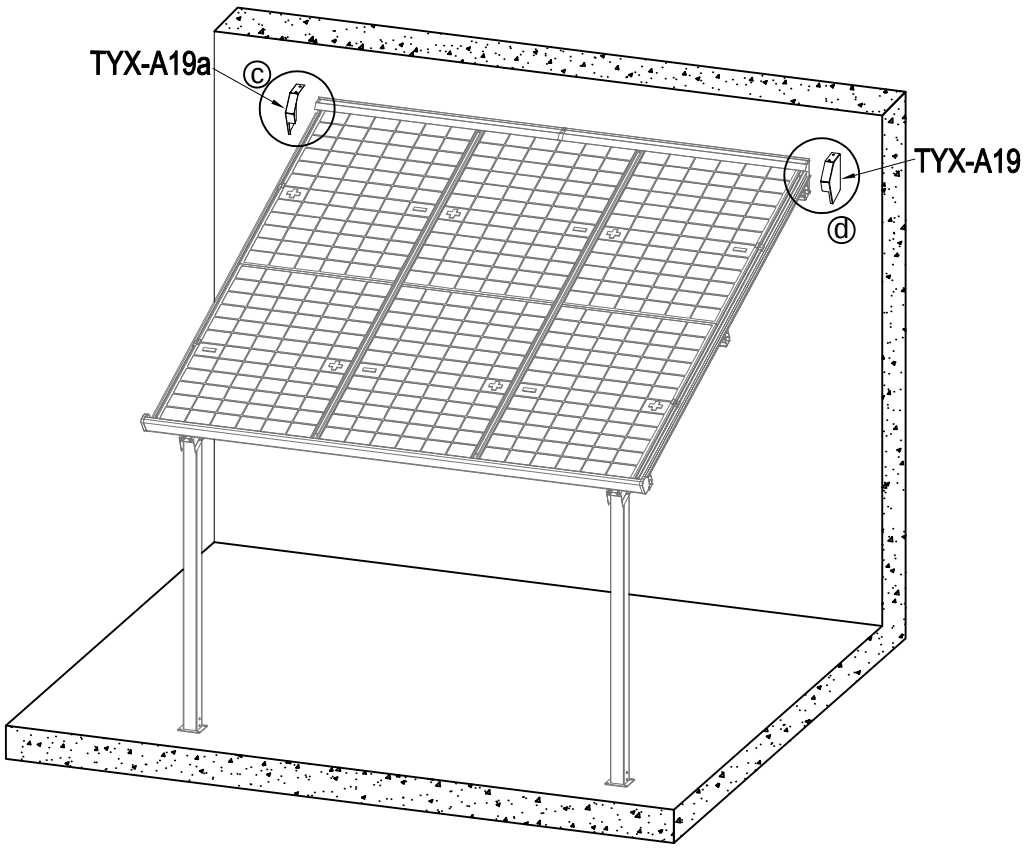

ⓒ

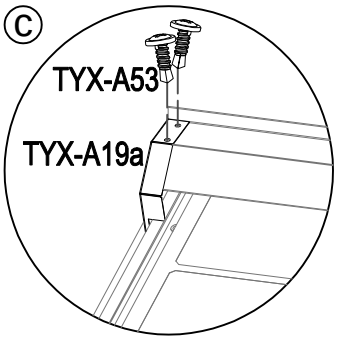

ⓓ

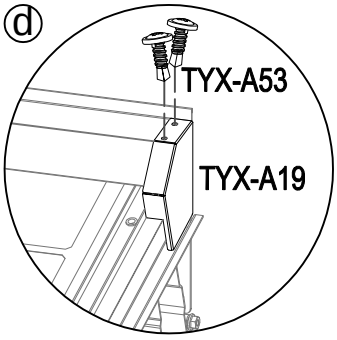

17	 TY-4 x6	 TY-5 x6	

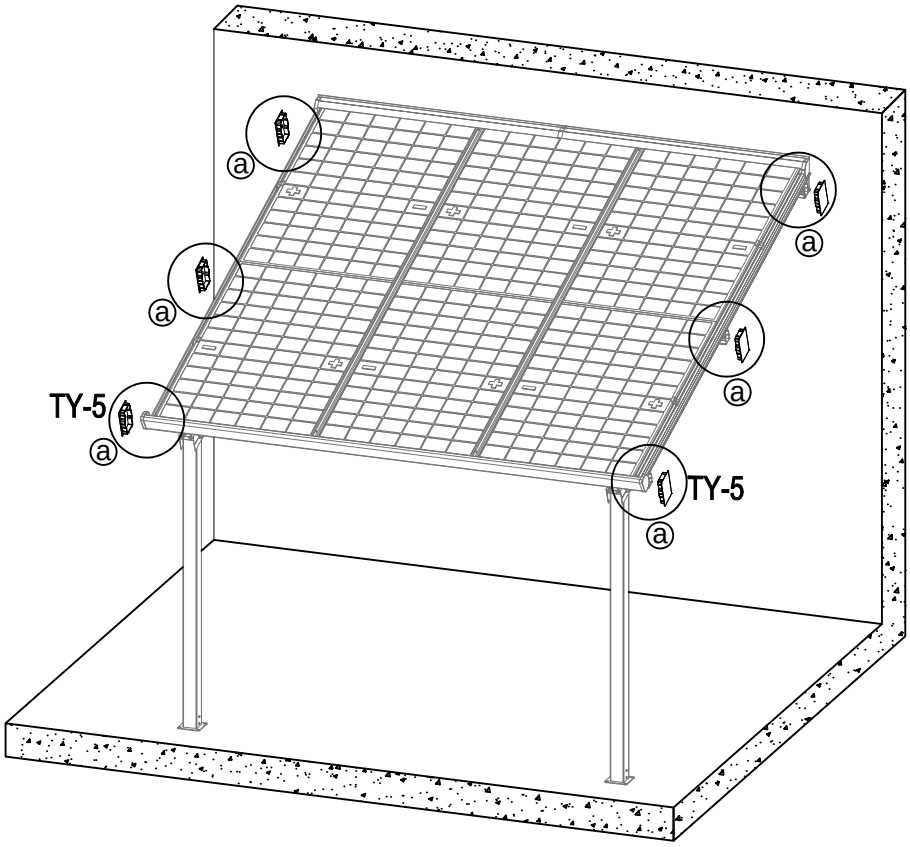

ⓐ

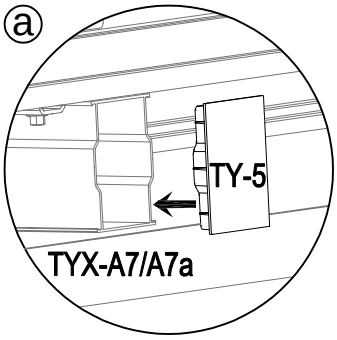

ⓑ

