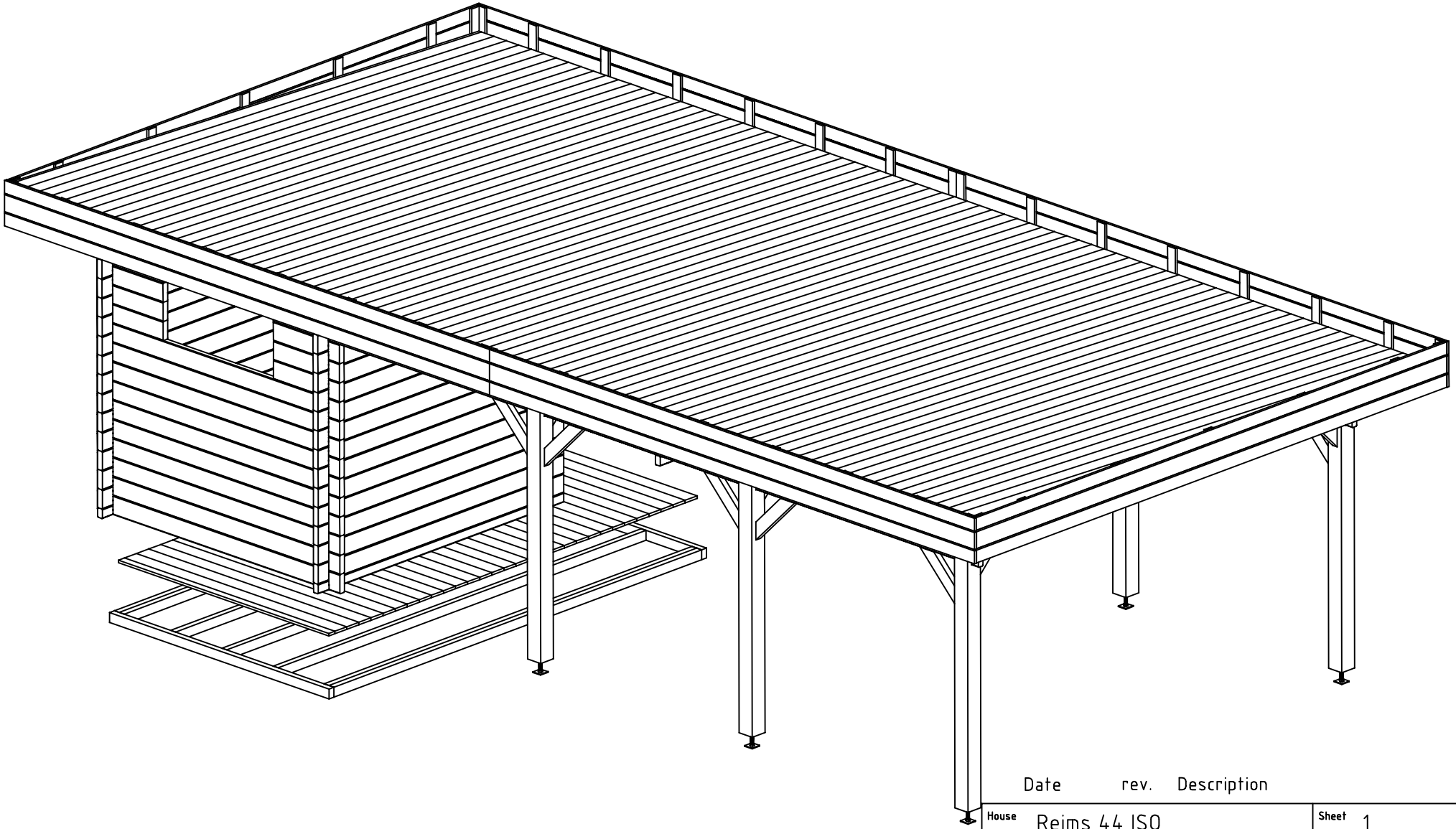

Date	rev.	Description

House	Reims 44 ISO	Sheet	1
Drawing	3D Plan	Scale	
Material	44x135	Date	13.04.2022
Drawer	RP	File	Reims 44 ISO 3D.dwg

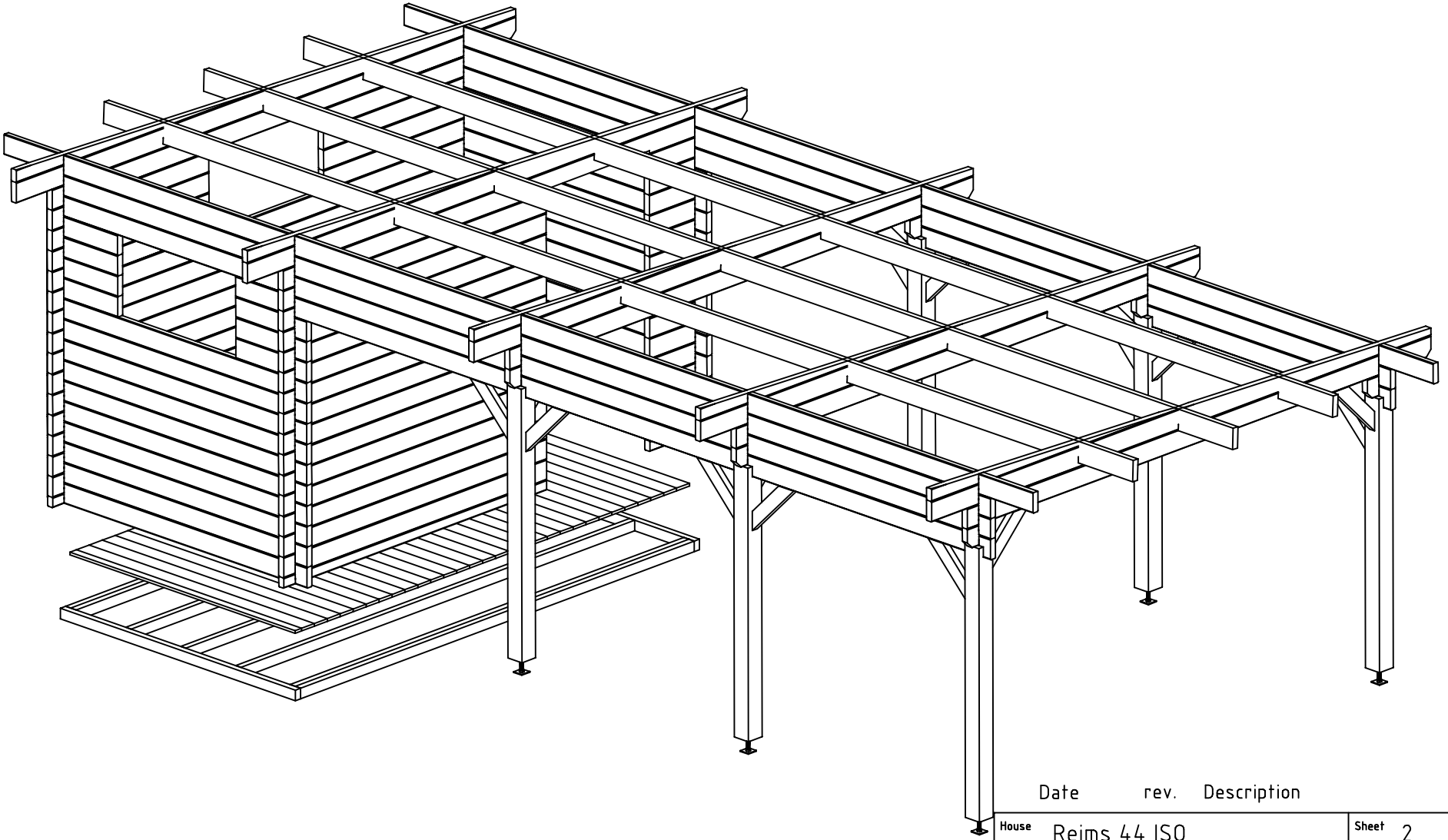

Date	rev.	Description

House	Reims 44 ISO	Sheet	2
Drawing	3D Plan	Scale	
Material	44x135	Date	13.04.2022
Drawer	RP	File	Reims 44 ISO 3D.dwg

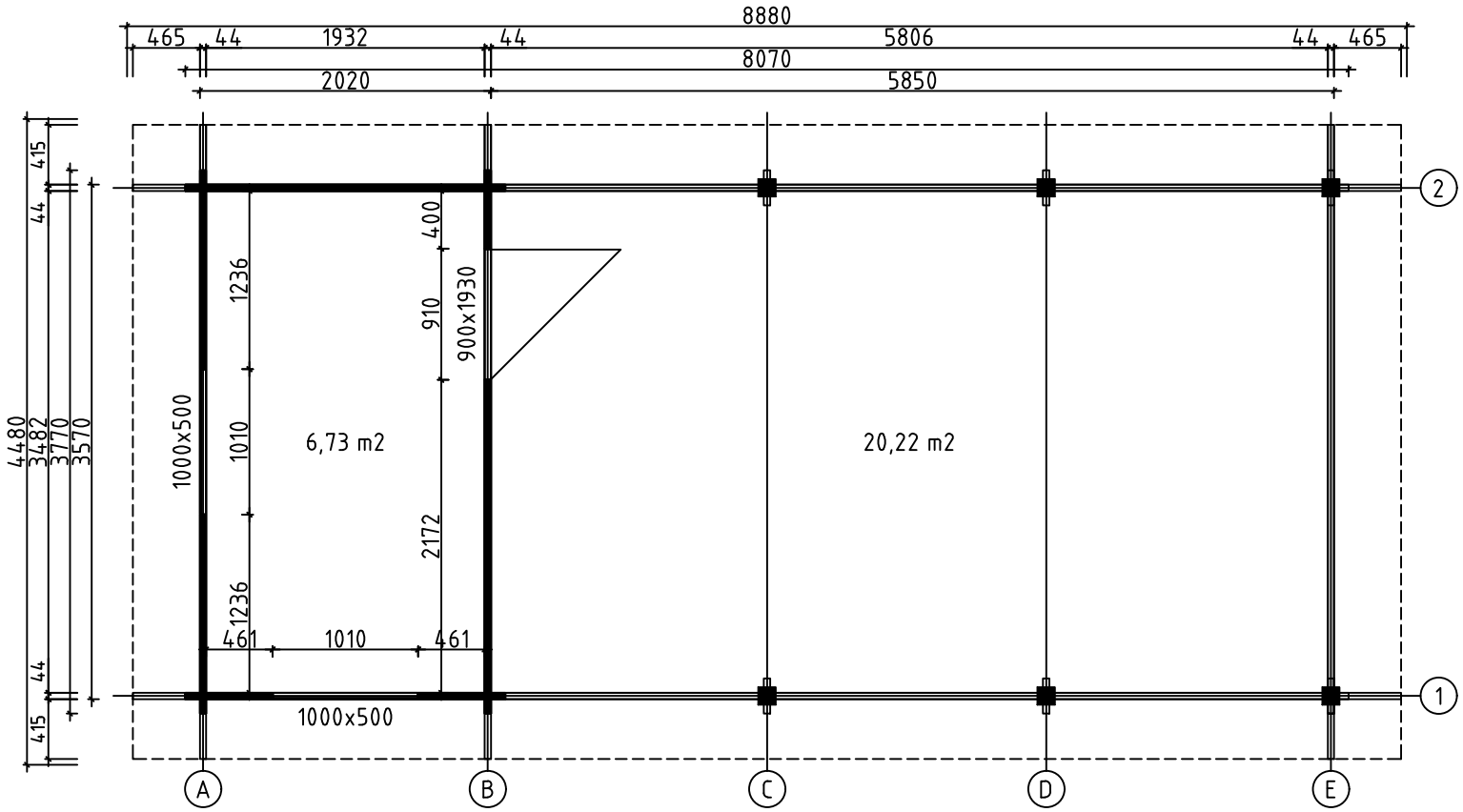

House	Reims 44 ISO	Sheet	3
Drawing	GROUNDPLAN	Scale	1:50
Material	44x135	Date	13.04.2022
Drawer	RP	File	Reims 44 ISO.dwg

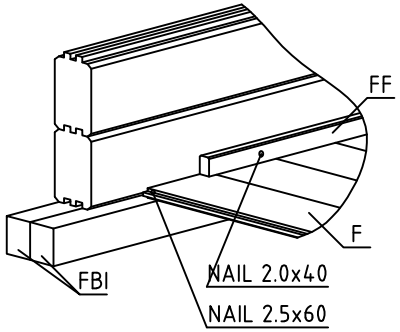

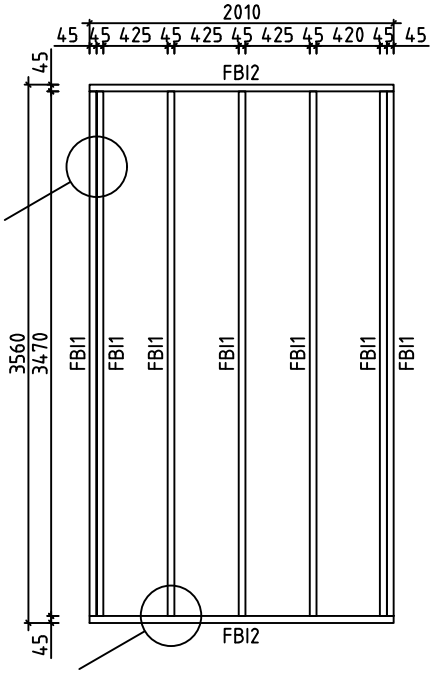

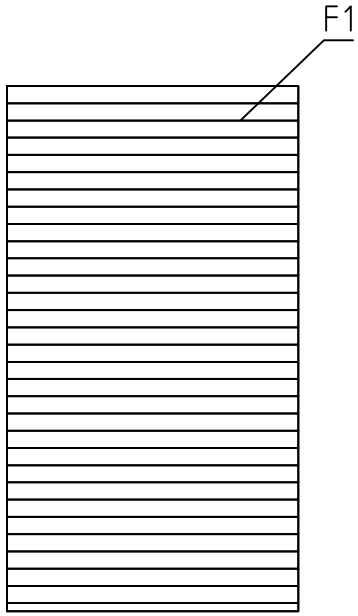

FLOORBOARD

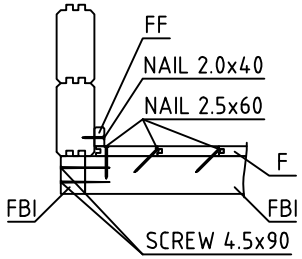

House	Reims 44 ISO	Sheet	4
Drawing	FLOORBEAMS	Scale	1:50
Material	43x70, 114x19	Date	13.04.2022
Drawer	RP	File	Reims 44 ISO.dwg

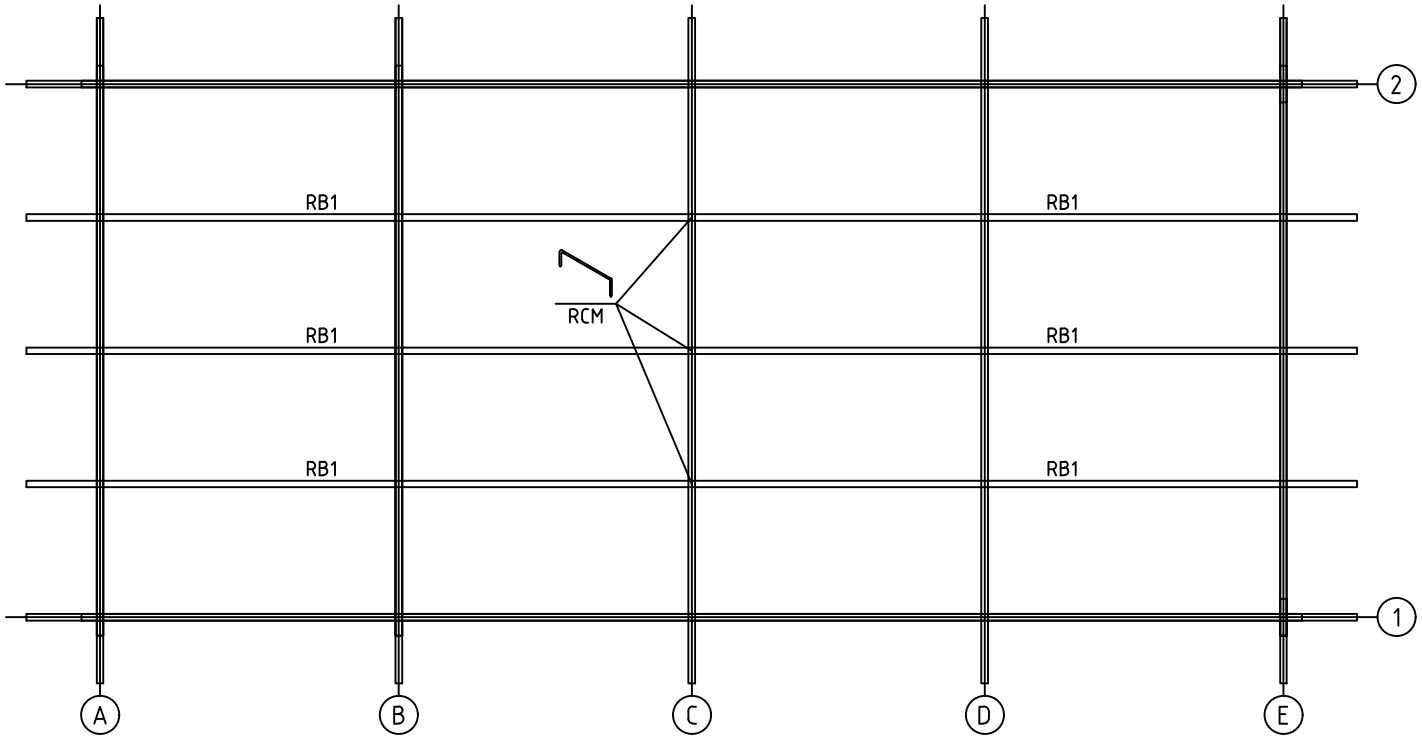

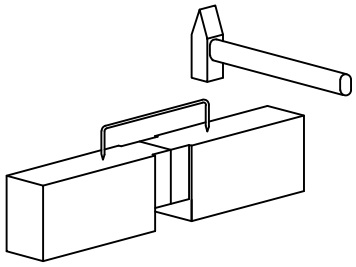

House	Reims 44 ISO	Sheet	5
Drawing	ROOFBEAMS	Scale	1:50
Material	43x140	Date	13.04.2022
Drawer	RP	File	Reims 44 ISO.dwg

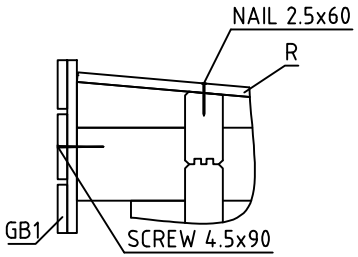

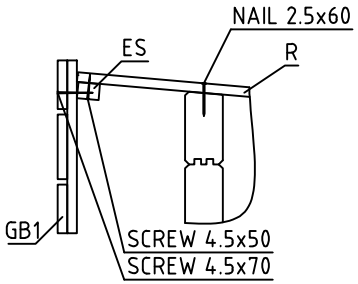

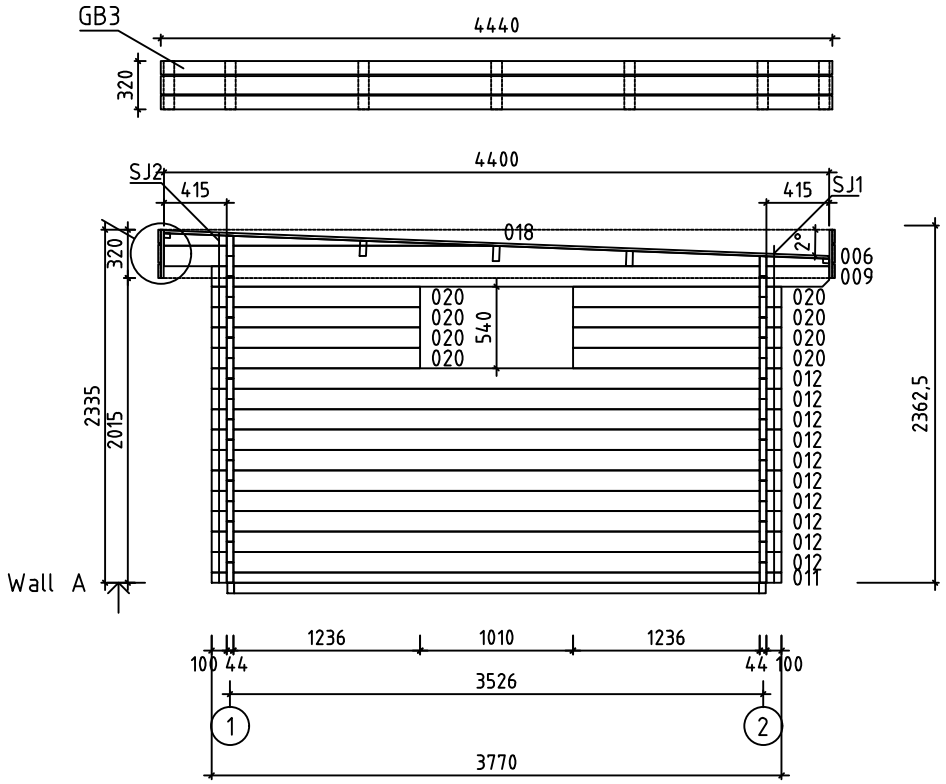

House	Reims 44 ISO	Sheet	6
Drawing	WALL A	Scale	1:50
Material	44x135	Date	13.04.2022
Drawer	RP	File	Reims 44 ISO.dwg

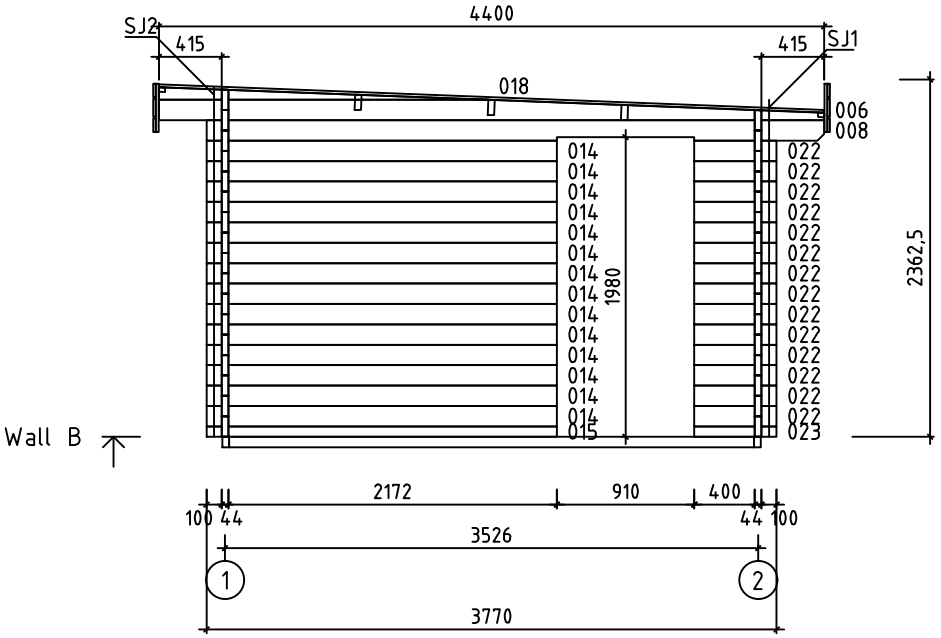

House	Reims 44 ISO	Sheet	7
Drawing	WALL B	Scale	1:50
Material	44x135	Date	13.04.2022
Drawer	RP	File	Reims 44 ISO.dwg

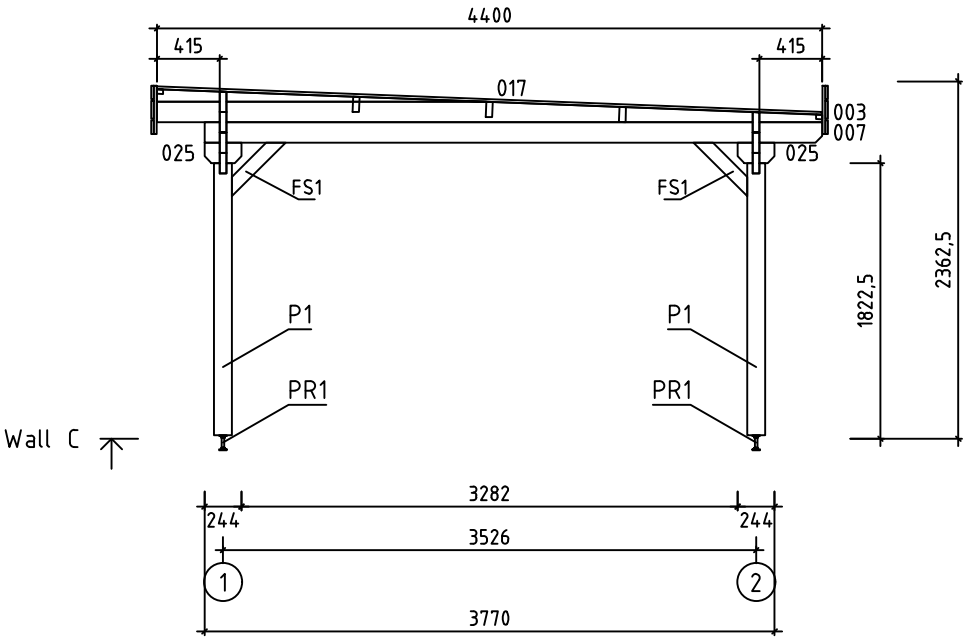

House	Reims 44 ISO	Sheet	8
Drawing	WALL C	Scale	1:50
Material	44x135	Date	13.04.2022
Drawer	RP	File	Reims 44 ISO.dwg

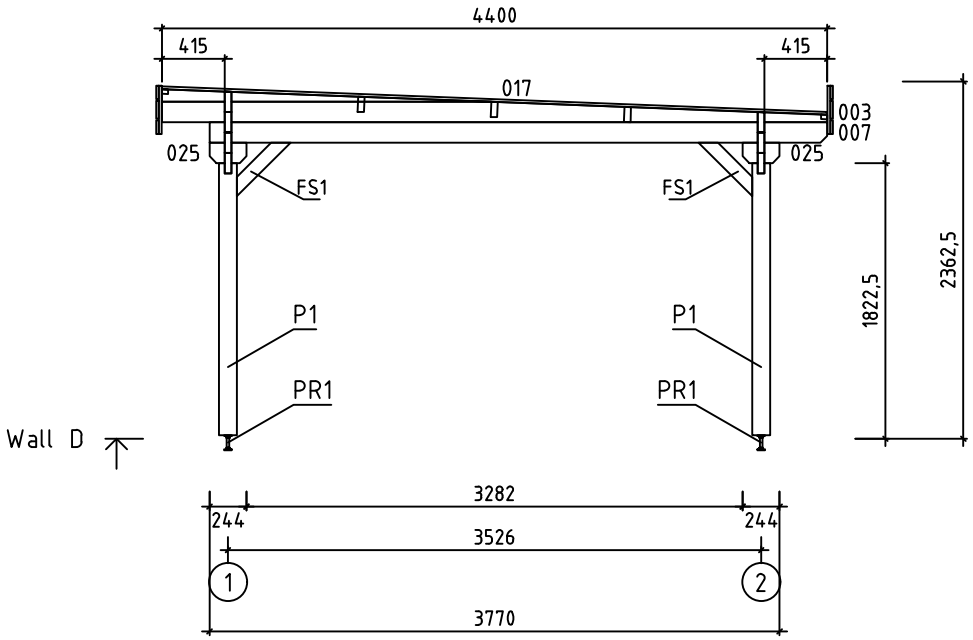

House	Reims 44 ISO	Sheet	9
Drawing	WALL D	Scale	1:50
Material	44x135	Date	13.04.2022
Drawer	RP	File	Reims 44 ISO.dwg

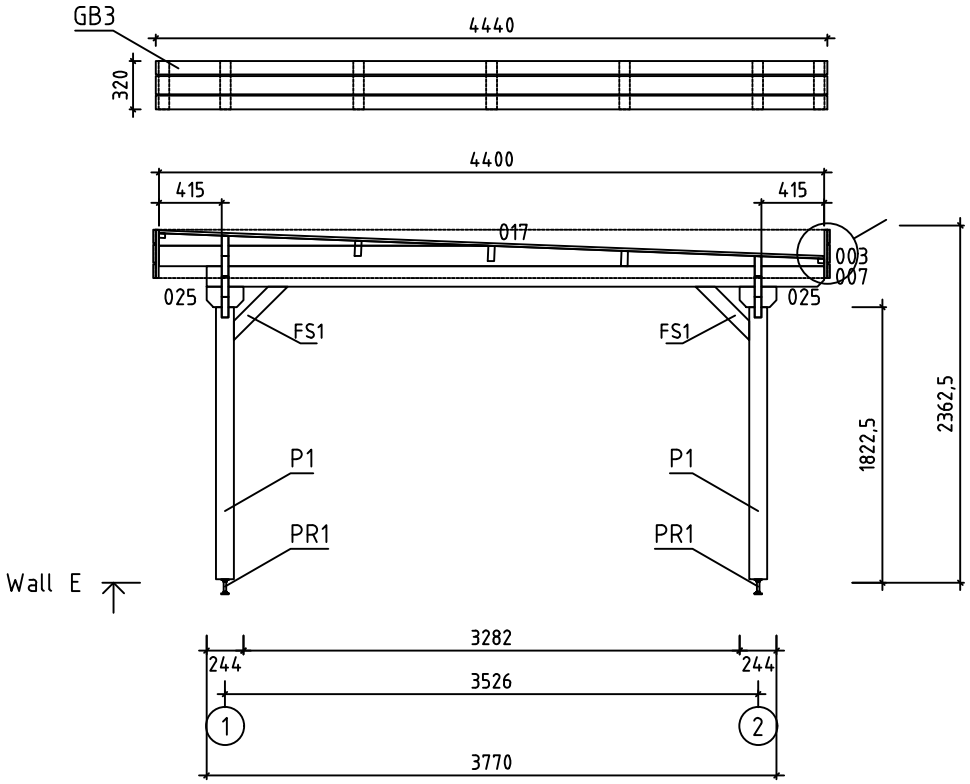

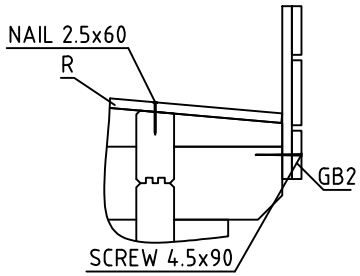

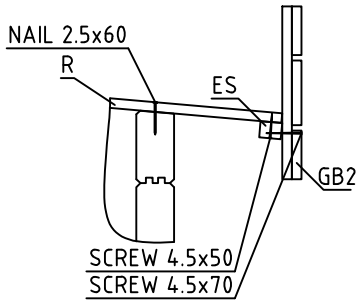

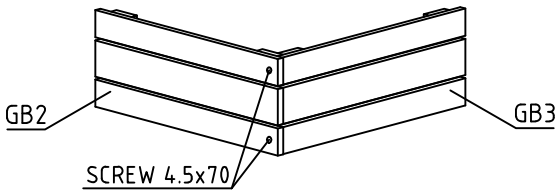

House	Reims 44 ISO	Sheet	10
Drawing	WALL E	Scale	1:50
Material	44x135	Date	13.04.2022
Drawer	RP	File	Reims 44 ISO.dwg

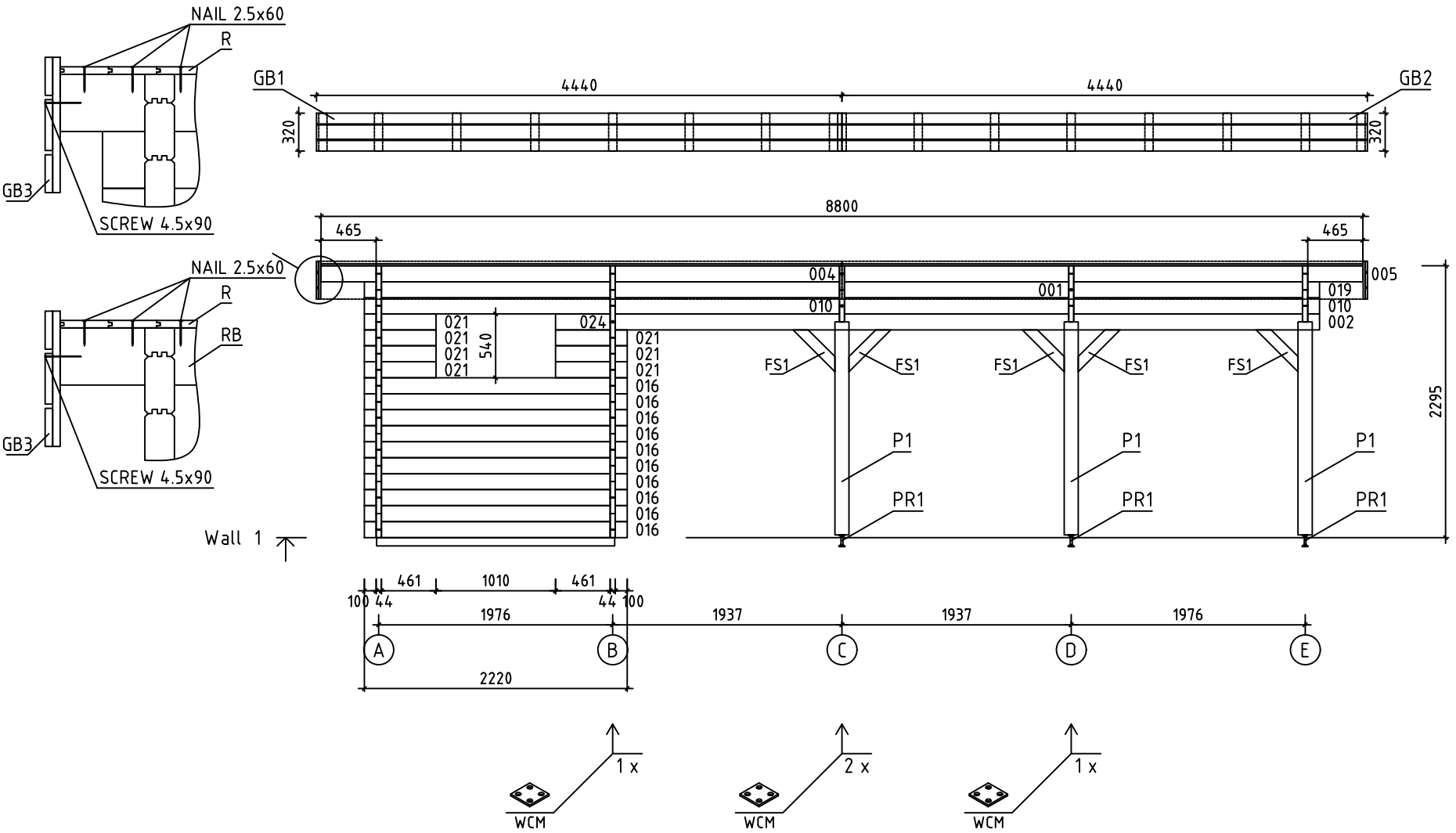

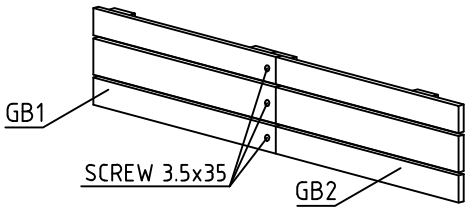

House	Reims 44 ISO	Sheet	11
Drawing	WALL 1	Scale	1:50
Material	44x135	Date	13.04.2022
Drawer	RP	File	Reims 44 ISO.dwg

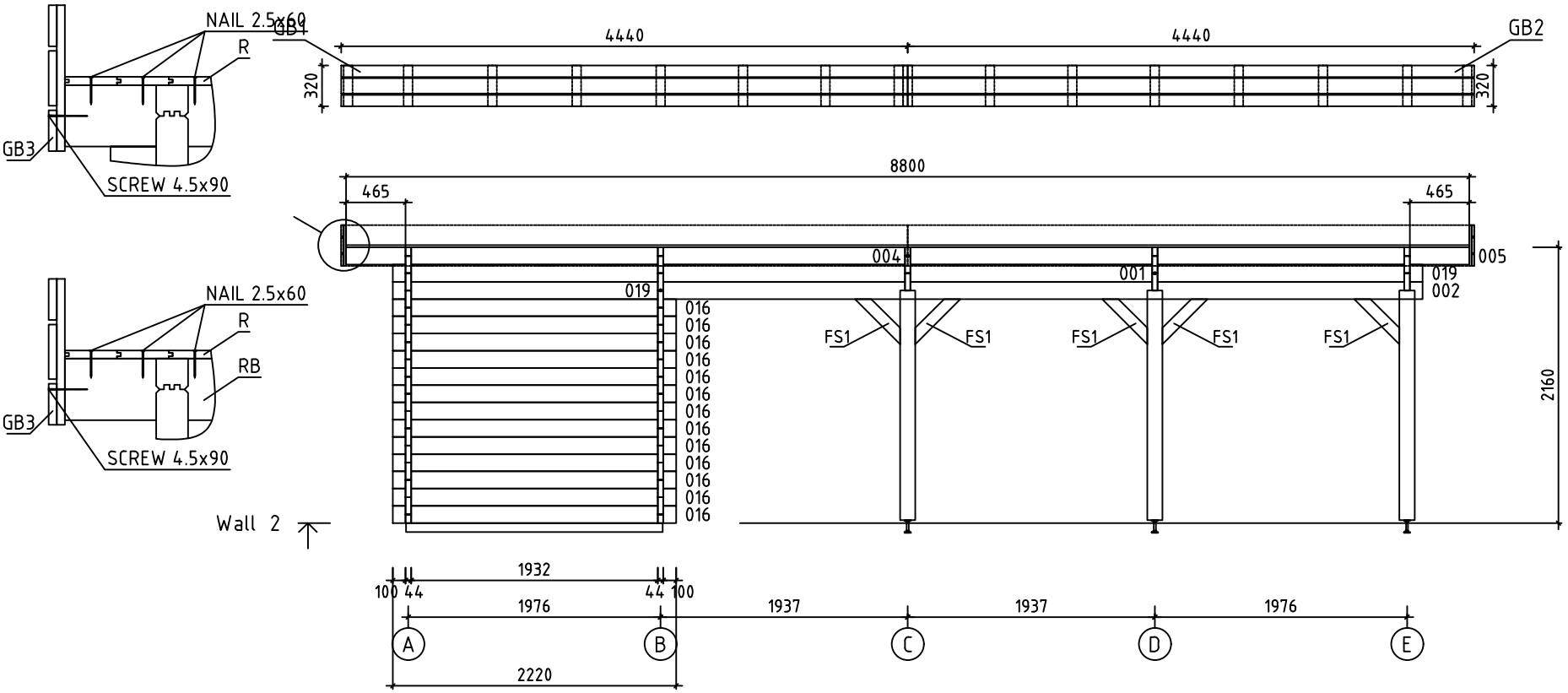

House	Reims 44 ISO	Sheet	12
Drawing	WALL 2	Scale	1:50
Material	44x135	Date	13.04.2022
Drawer	RP	File	Reims 44 ISO.dwg

Pos	Specification-Bestimmung-Spécification	PCS	Profile (mm)	L (mm)
001	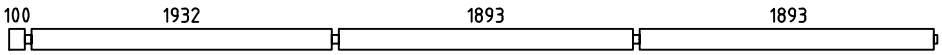	2	44x135	5972
002	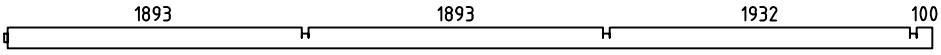	2	44x135	5972
004	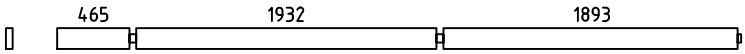	2	44x135	4400
005	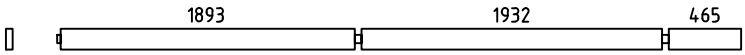	2	44x135	4400
010	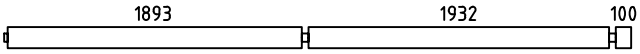	2	44x135	4035
011	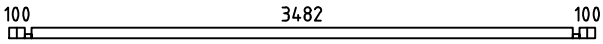	1	44x68	3770
012	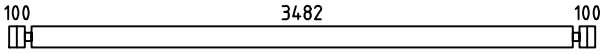	10	44x135	3770
013	SPARE BEAM-ERZATZBOHLE-MADRIER DE RÉSERVE 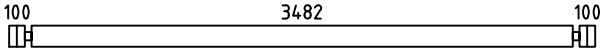	1	44x135	3770
014	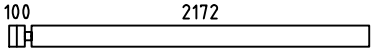	14	44x135	2316
015	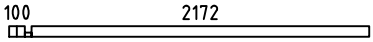	1	44x68	2316
016	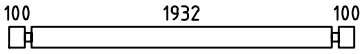	23	44x135	2220
019	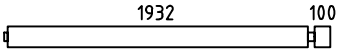	3	44x135	2098
020	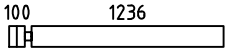	8	44x135	1380
021	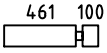	7	44x135	605
022		14	44x135	544
023		1	44x68	544
024		1	44x135	483
025		6	44x135	244
WA-1	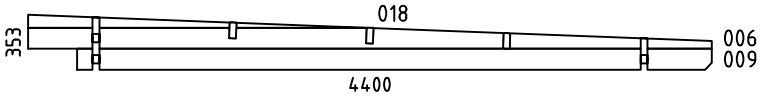	1	44x353	4400
WB-1	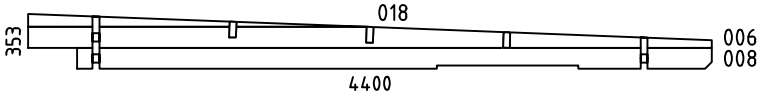	1	44x353	4400
WC-1 WD-1 WE-1	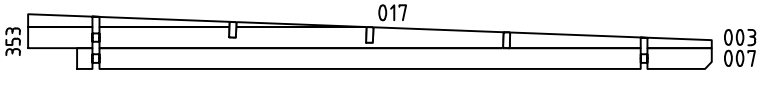	3	44x353	4400
HB	HIT BLOCK-SCHLAGHÖLZER-MADRIERS D´ASSEMBLAGE 	2	44x135	300

House	Reims 44 ISO	Material		File	Reims 44 ISO.dwg	Sheet	13

Pos	Specification-Bestimmung-Spécification	PCS	Profile (mm)	L (mm)
FBI1	FLOORBEAMS-FUSSBODENBALKEN-POUTRES DE FONDATION IMPRÉGNÉS IMM	7	45x70	3470
FBI2	FLOORBEAMS-FUSSBODENBALKEN-POUTRES DE FONDATION IMPRÉGNÉS IMM	2	45x70	2010
FS1		16	43x90	500
P1	POST-PFOSTEN-POTEAU 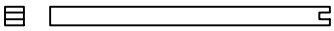	6	120x120	1800
RB1	ROOFBEAMS-DACHBALKEN-SOLIVES DE PLAFOND 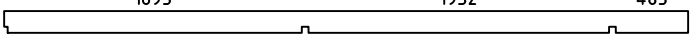	6	43x140	4400
F1	FLOORBOARD-FUSSBODENBRETT-PLANCHER or-oder-ou	31+1 41+1	18x114 18x88	1925
R1	ROOFBOARD-DACHBRETT-VOLIGES or-oder-ou	78+1 101+1	18x114 18x88	4400
FF1	FLOOR FILLET-FUSSBODENLEISTE-BAGUETTE DE FINITION DE PLANCHER		18x35	11m
GB1	ASSEMBLY REQUIRED-MONTAGE ERFORDERLICH-ASSEMBLAGE REQUIS 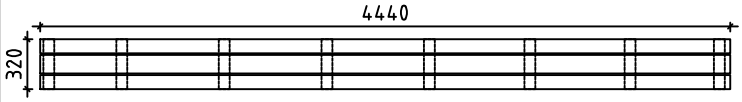	2	36x320	4440
GB2	ASSEMBLY REQUIRED-MONTAGE ERFORDERLICH-ASSEMBLAGE REQUIS 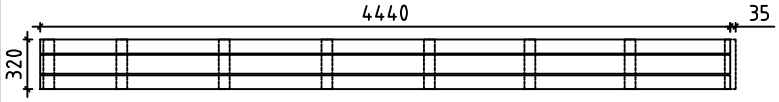	2	36x320	4440 +35
GB3	ASSEMBLY REQUIRED-MONTAGE ERFORDERLICH-ASSEMBLAGE REQUIS 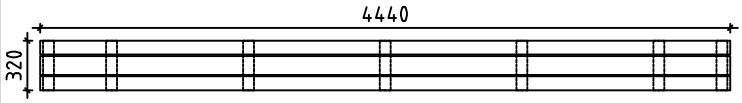	2	36x320	4440
ES1	EAVE SLAT-TRAUFENLEISTE-BAGUETTES POUR FIXER LES LATTES SOUS VOLIGES 	4	30x40	1930
ES2	EAVE SLAT-TRAUFENLEISTE-BAGUETTES POUR FIXER LES LATTES SOUS VOLIGES 	4	30x40	1890
ES3	EAVE SLAT-TRAUFENLEISTE-BAGUETTES POUR FIXER LES LATTES SOUS VOLIGES 	4	30x40	465
SJ1	SCREW JOINT-GEWINDESTANGE -TIGES FILETÉS	2	M10	2180
SJ2	SCREW JOINT-GEWINDESTANGE -TIGES FILETÉS	2	M10	2320
RCM	ROOFBEAMS CONNECTING METAL-DACHBALKEN BEFESTIGUNGSMETALLE -CONNECTEUR MÉTALLIQUE POUR SOLIVES DE PLAFOND 	3	⌀6.0	200
WCM	WALLBEAMS CONNECTING METAL-WANDBOHLEN BEFESTIGUNG -METALLE-PATTE D´ASSEMBLAGE 	7	25	25
PR1	POST REGULATOR-PFOSTEN REGLER- PIED MÉTALLIQUE RÉGLABLE POUR POTEAU 	6		
	NAIL-NAGEL-CLOUS FOR-FÜR-POUR COATING FOR ROOF-BESCHICHTUNG FÜR DACH-REVÊTEMENT DE TOIT	530	⌀2.5	20
	NAIL-NAGEL-CLOUS FOR-FÜR-POUR FF1	26	⌀2.0	40
	NAIL-NAGEL-CLOUS FOR-FÜR-POUR F1, R1	720	⌀2.5	60

House Reims 44 ISO	Material	File Reims 44 ISO.dwg	Sheet 14

Pos	Specification-Bestimmung-Spécification	PCS	Profile (mm)	L (mm)
	SCREWS-SCHRAUBEN-VIS FOR-FÜR-POUR WCM, GB1, GB2, GB3 	310	ϕ3.5	35
	SCREWS-SCHRAUBEN-VIS FOR-FÜR-POUR ES1, ES2, ES3, P1, PR1 	100	ϕ4.5	50
	SCREWS-SCHRAUBEN-VIS FOR-FÜR-POUR GB1, GB2, GB3	30	ϕ4.5	70
	SCREWS-SCHRAUBEN-VIS FOR-FÜR-POUR 011, 015, 023, FBI1, FBI2 GB1, GB2, GB3	70	ϕ4.5	90
	SCREWS-SCHRAUBEN-VIS FOR-FÜR-POUR WA-1, WB-1, WC-1, WD-1, WE-1, RB1 	50	ϕ6.0	160
	COATING FOR ROOF-BESCHICHTUNG FÜR DACH-REVÉTEMENT DE TOIT 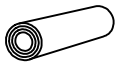	5,0	R = 10m	
	DOOR-TÜR-PORTE (right-rechts-droit) ORT_ECO P 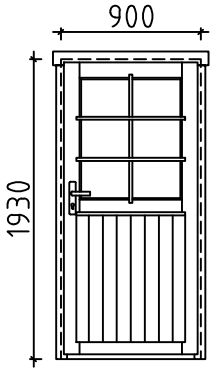 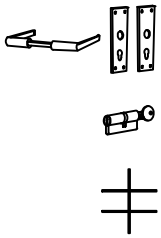	1 1 1 1	900	1930
	WINDOW-FENSTER-FENÉTRE (right-rechts-droit) ORT_ECO P 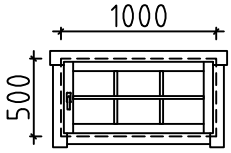 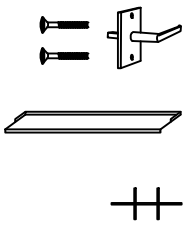	2 2 2 2	1000	500

House Reims 44 ISO	Material	File Reims 44 ISO.dwg	Sheet 15

Pos	Assembly Instructions-Montageanleitungen-Instructions de Montage	PCS	Profile (mm)	L (mm)
L1	BOARD-BRETT-PLANCHE	6	18x120	4440
L2	BOARD-BRETT-PLANCHE	12	18x90	4440
L3	BOARD-BRETT-PLANCHE	46	18x70	320

GB1 — 2 — 36x320 — 4440

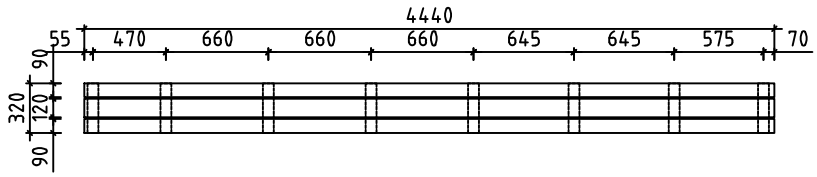

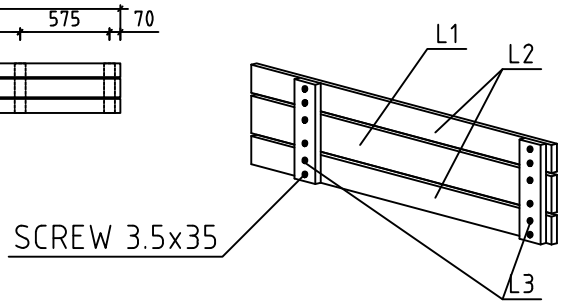

GB2 — 2 — 36x320 — 4440 +35

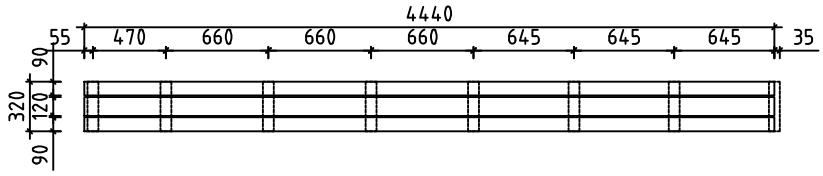

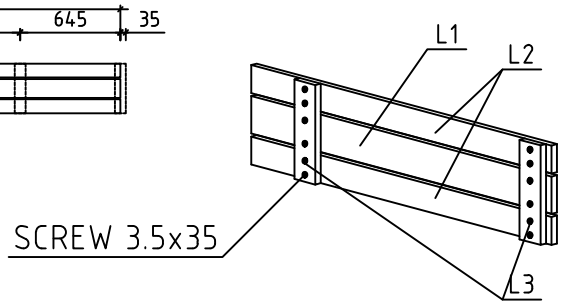

GB3 — 2 — 36x320 — 4440

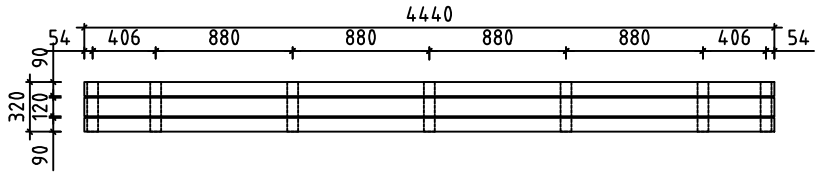

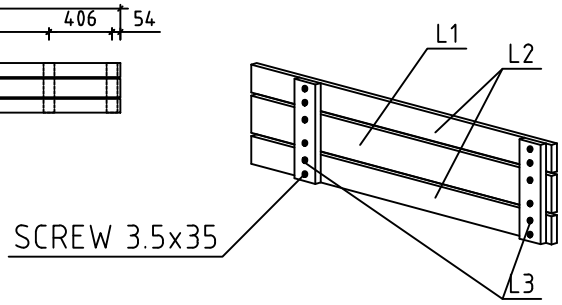

House Reims 44 ISO	Material	File Reims 44 ISO.dwg	Sheet 16

#001	1,2	5972	2
#002	1,2	5972	2
#003	C,D,E	4400	3
#004	1,2	4400	2
#005	1,2	4400	2
#006	A,B	4400	2
#007	C,D,E	4085	3
#008	B	4085	1
#009	A	4085	1
#010	1	4035	2
#011	A	3770	1
#012	A	3770	10
#013		3770	1
#014	B	2316	14
#015	B	2316	1
#016	1,2	2220	23
#017	C,D,E	2178	3
#018	A,B	2178	2
#019	1,2	2098	3
#020	A	1380	8
#021	1	605	7
#022	B	544	14
#023	B	544	1
#024	1	483	1
#025	C,D,E	244	6