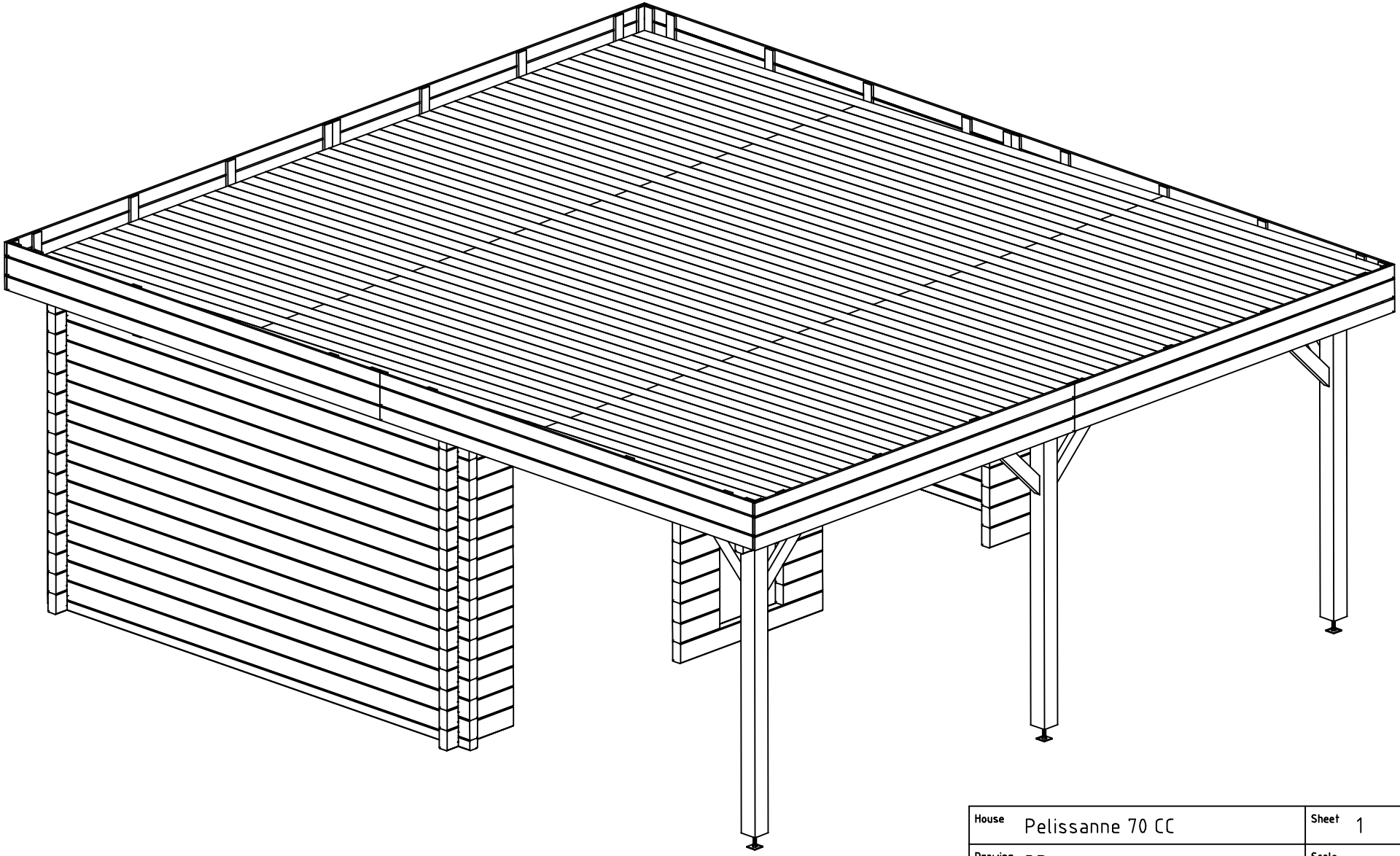

House	Pelissanne 70 CC	Sheet	1
Drawing	3D	Scale	
Material	70x135	Date	30.04.2019
Drawer	RP	File	Pelissanne 70 CC 3D.dwg

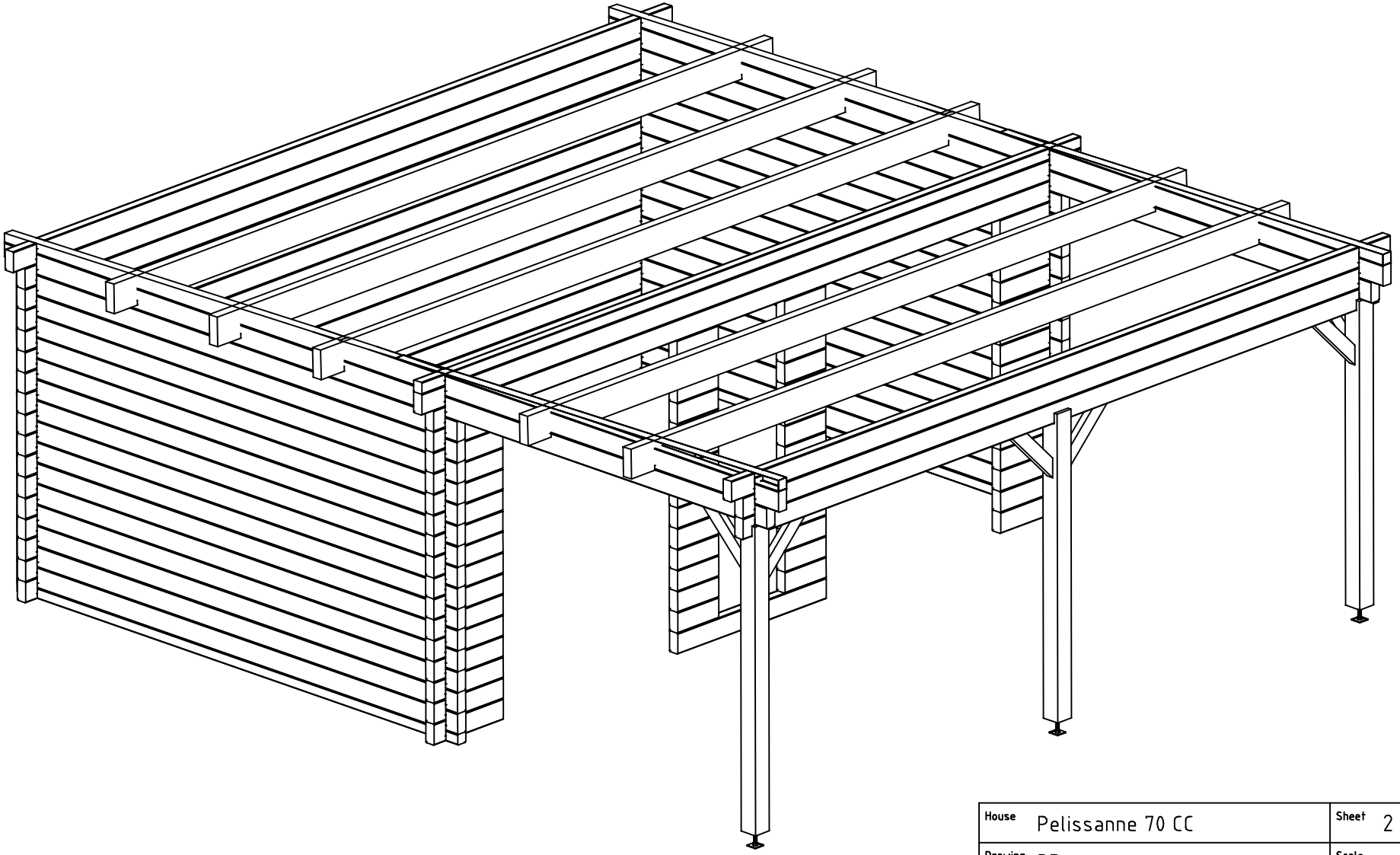

House	Pelissanne 70 CC	Sheet	2
Drawing	3D	Scale	
Material	70x135	Date	30.04.2019
Drawer	RP	File	Pelissanne 70 CC 3D.dwg

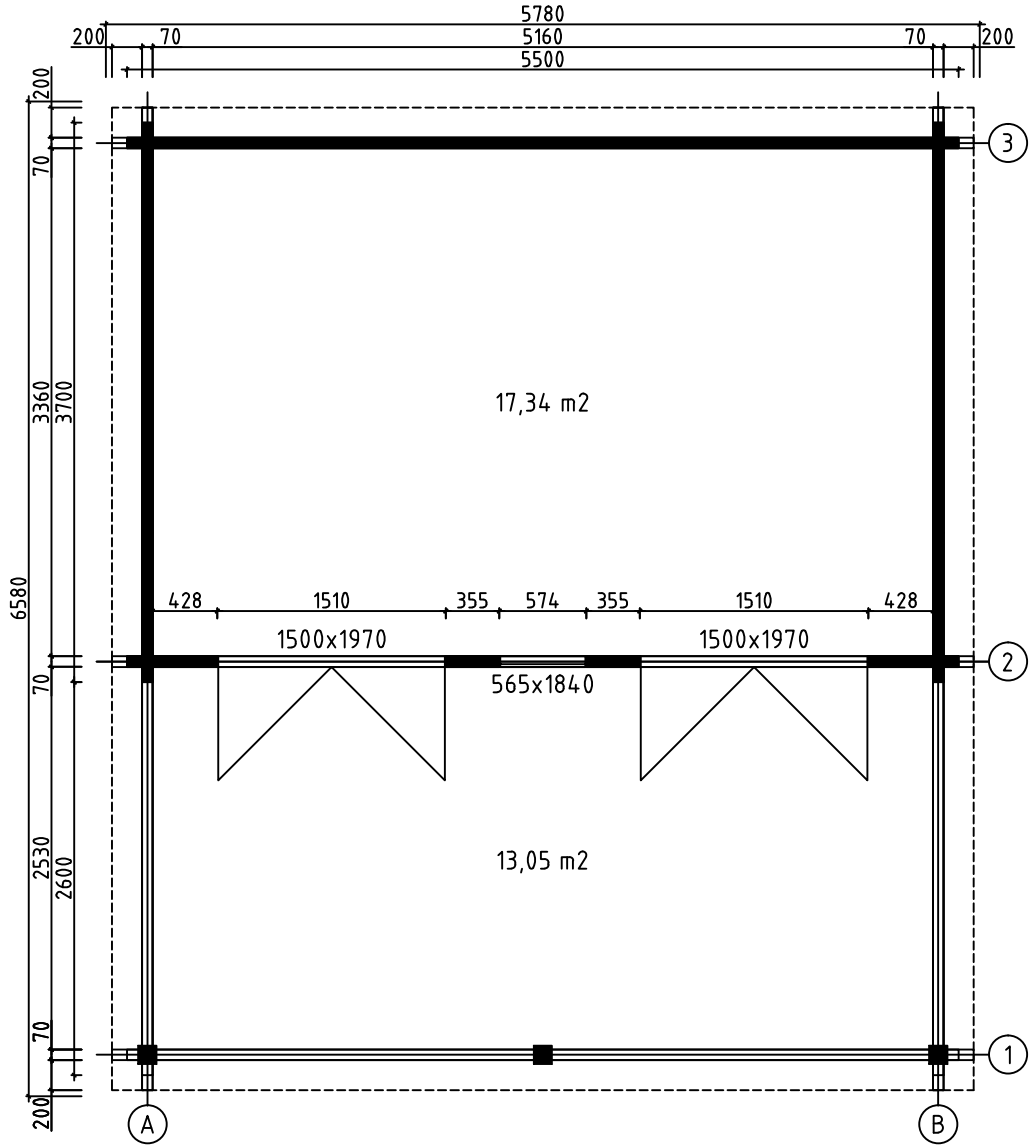

House	Pelissanne 70 CC	Sheet	3
Drawing	GROUNDPLAN	Scale	1:50
Material	70x135	Date	30.04.2019
Drawer	RP	File	Pelissanne 70 CC.dwg

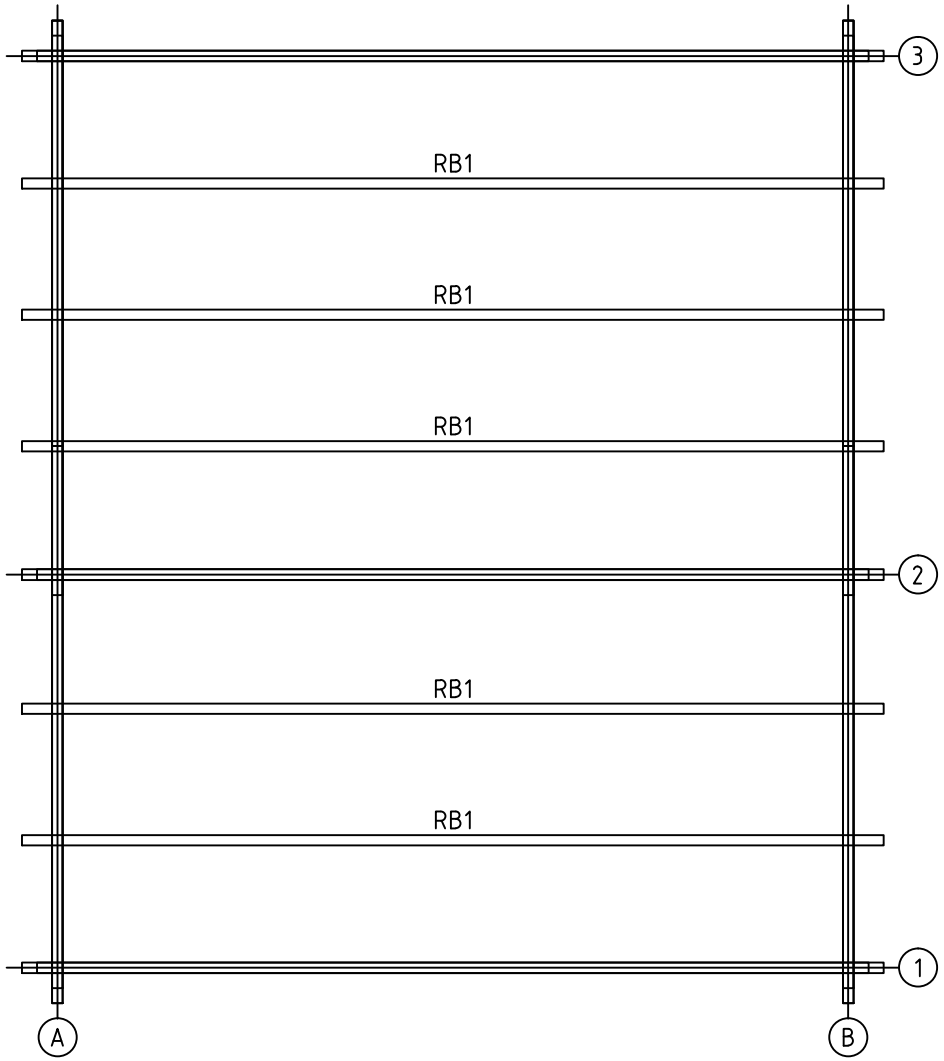

House	Pelissanne 70 CC	Sheet	4
Drawing	ROOFBEAMS	Scale	1:50
Material	68x190	Date	30.04.2019
Drawer	RP	File	Pelissanne 70 CC.dwg

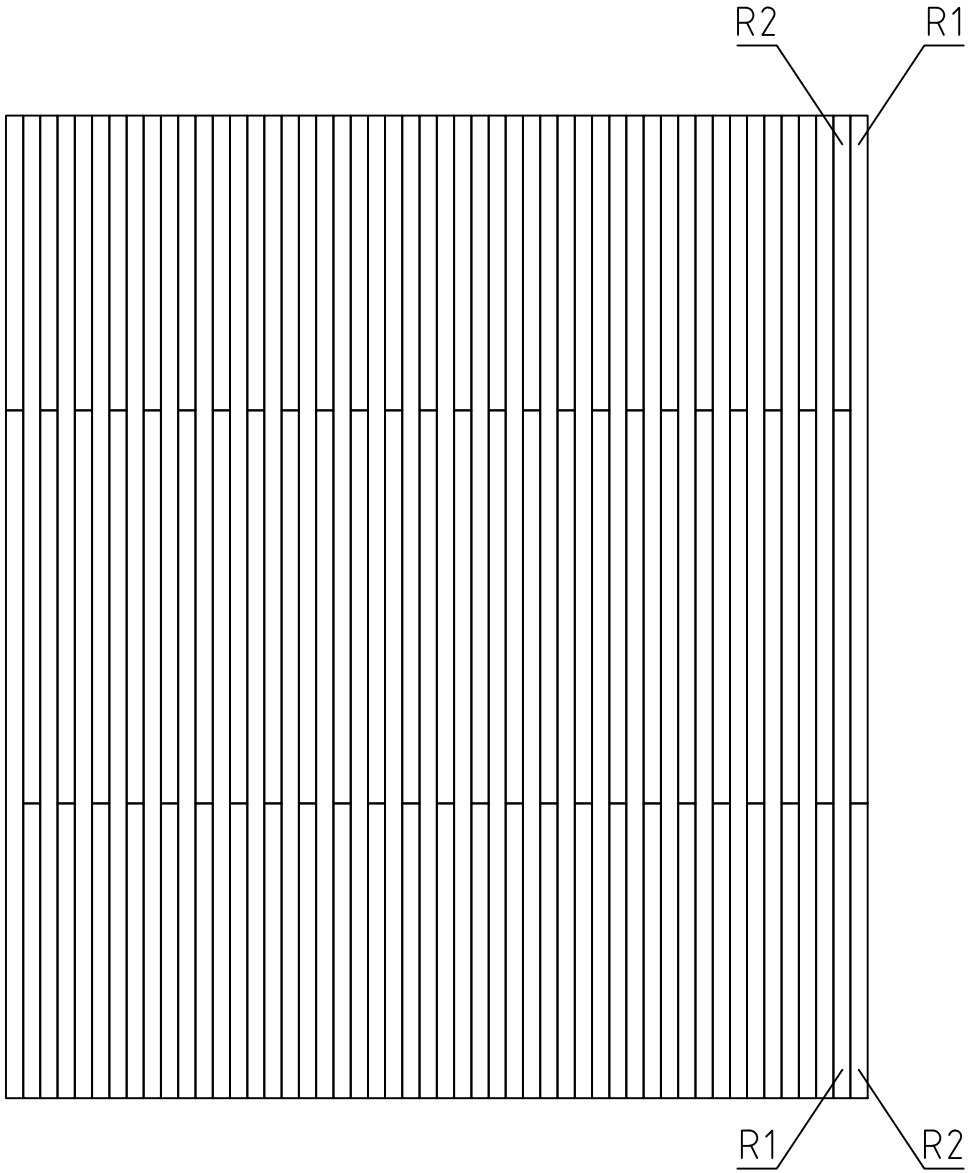

House	Pelissanne 70 CC	Sheet	5
Drawing	ROOFBOARD	Scale	1:50
Material	18x114	Date	30.04.2019
Drawer	RP	File	Pelissanne 70 CC.dwg

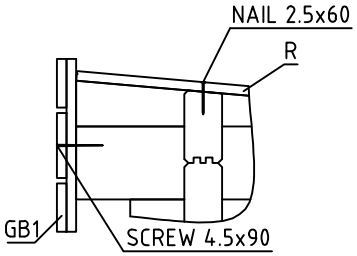

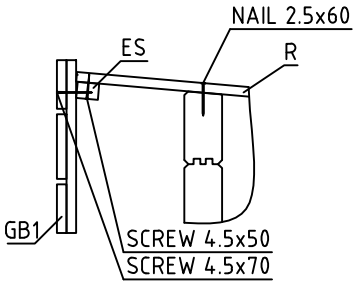

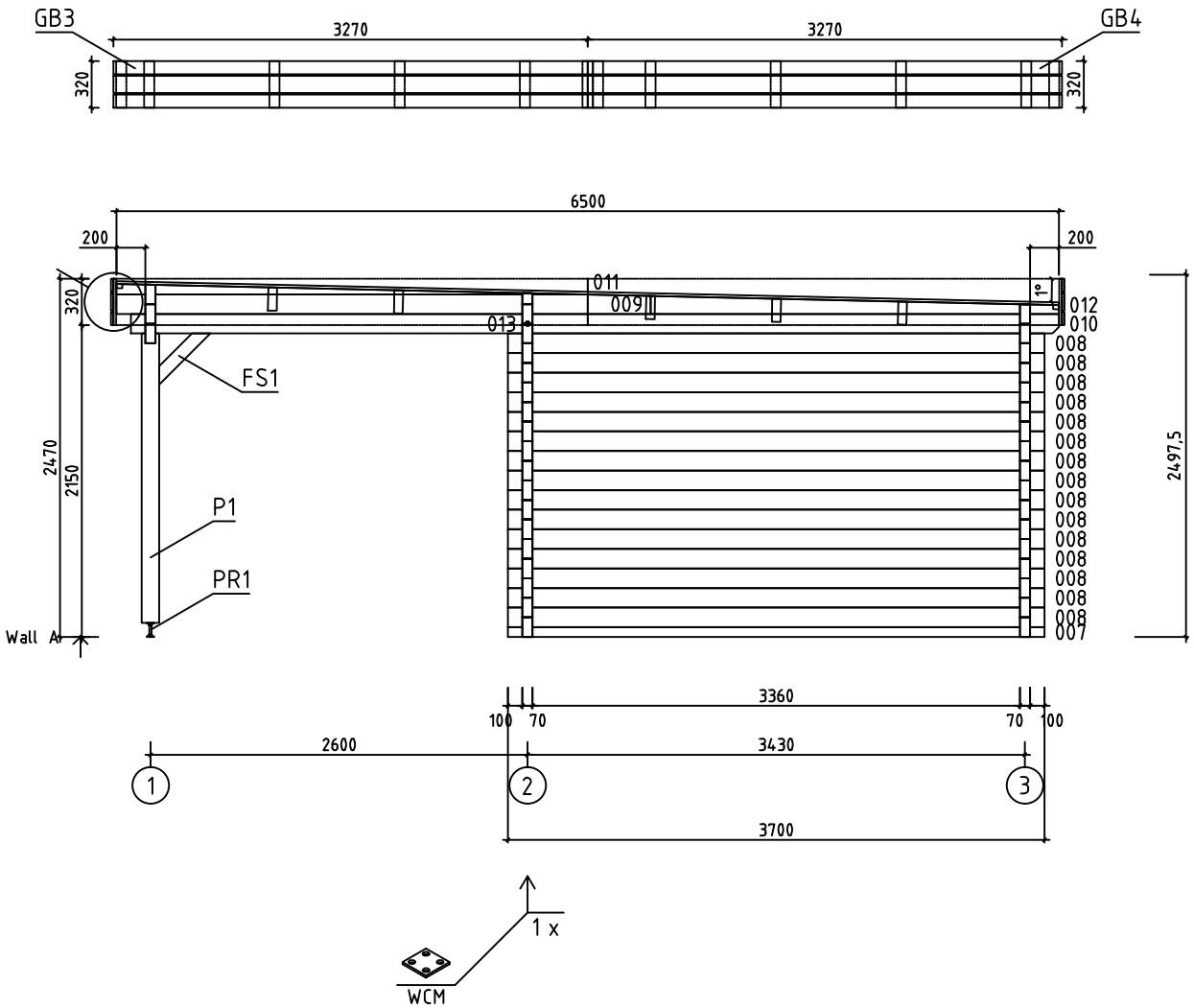

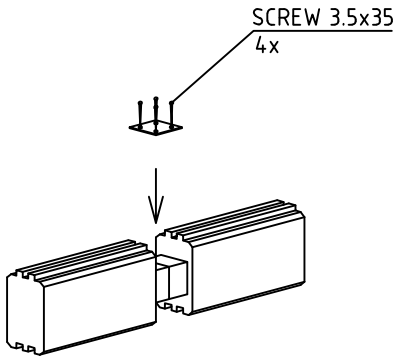

House	Pelissanne 70 CC	Sheet	6
Drawing	WALL A	Scale	1:50
Material	70x135	Date	30.04.2019
Drawer	RP	File	Pelissanne 70 CC.dwg

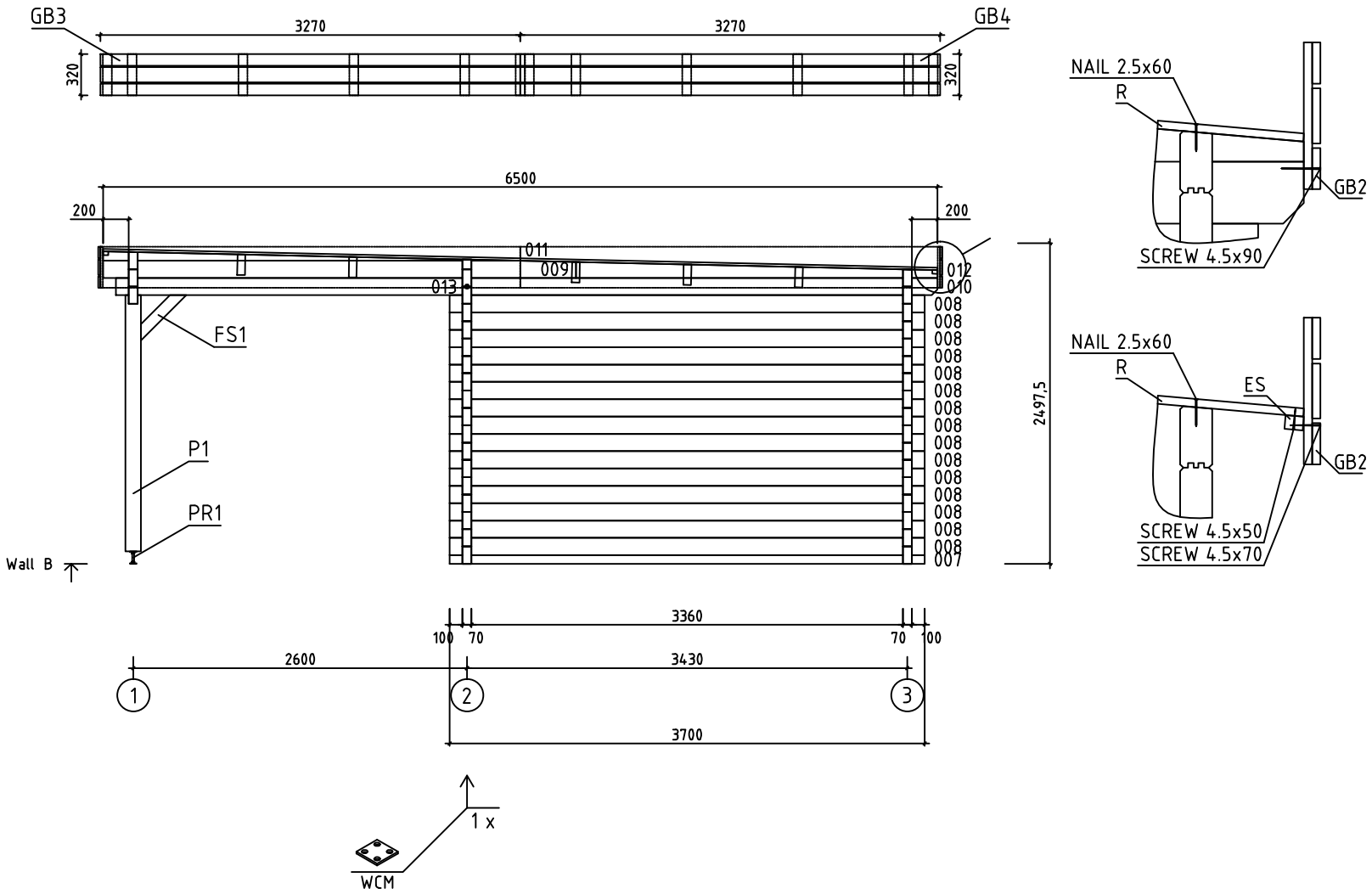

House	Pelissanne 70 CC	Sheet	7
Drawing	WALL B	Scale	1:50
Material	70x135	Date	30.04.2019
Drawer	RP	File	Pelissanne 70 CC.dwg

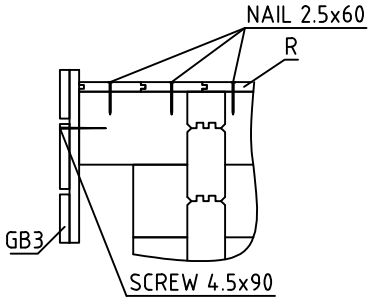

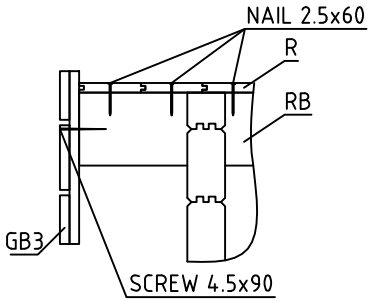

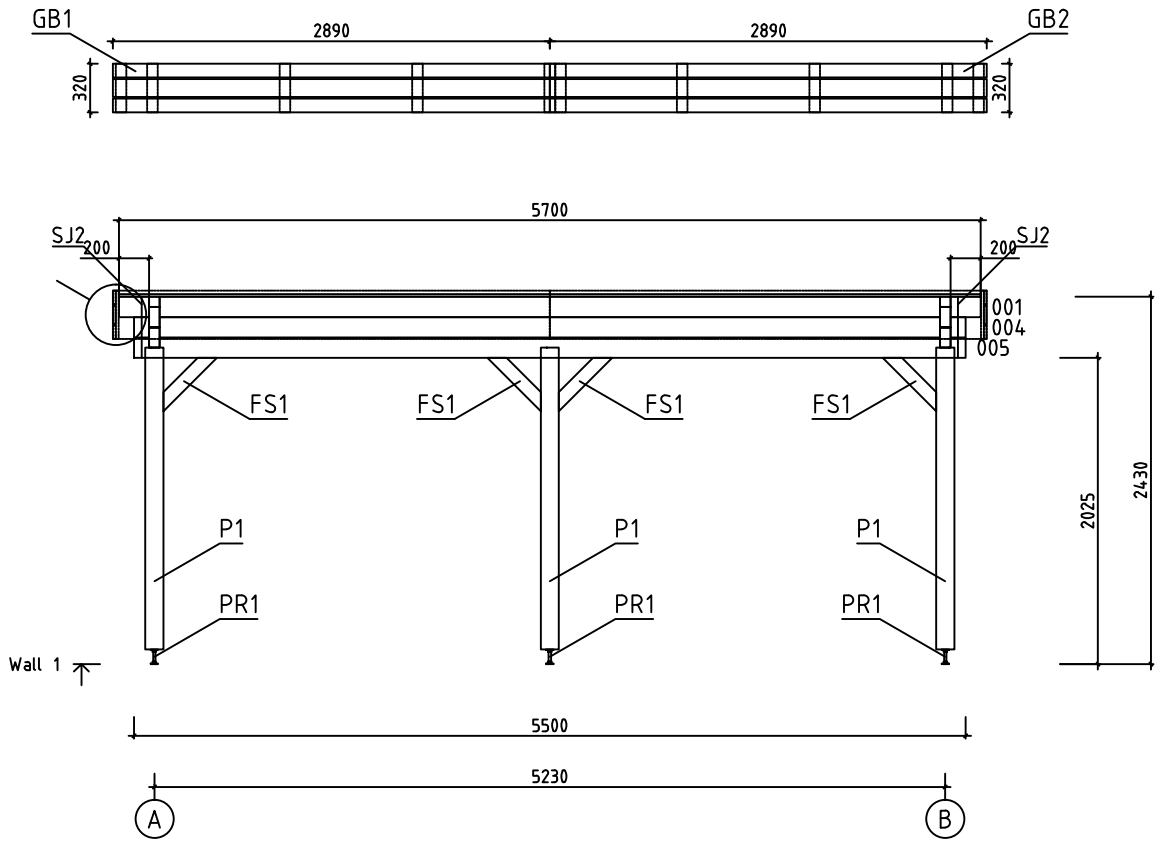

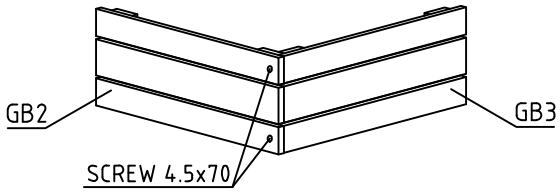

House	Pelissanne 70 CC	Sheet	8
Drawing	WALL 1	Scale	1:50
Material	70x135	Date	30.04.2019
Drawer	RP	File	Pelissanne 70 CC.dwg

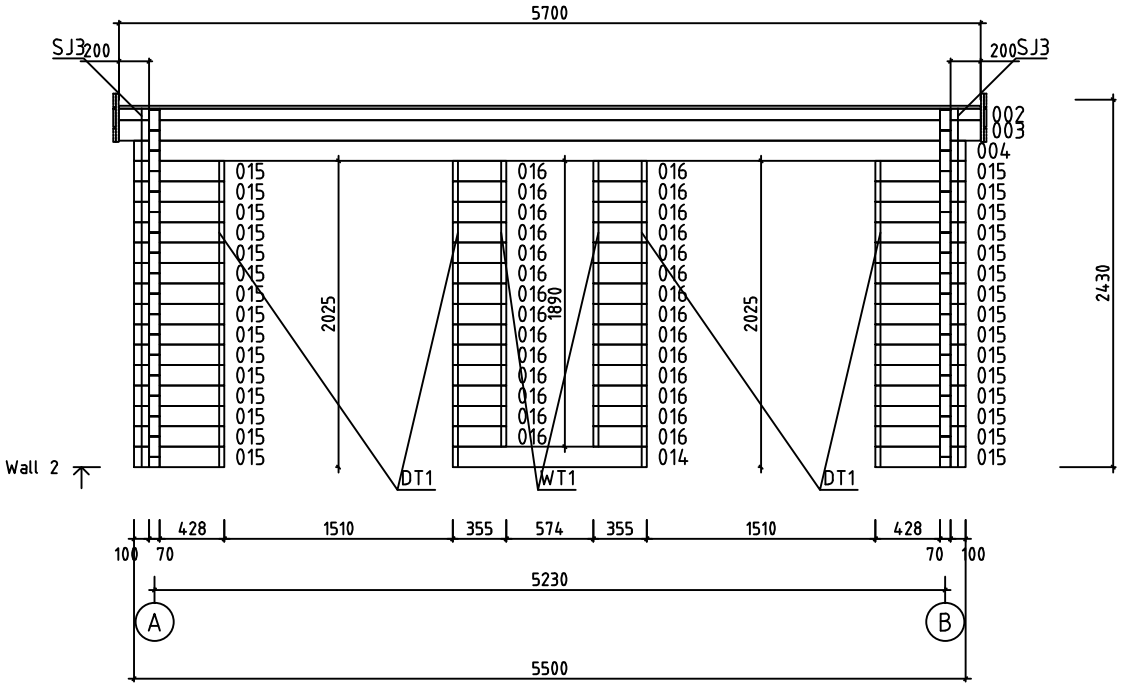

House	Pelissanne 70 CC	Sheet	9
Drawing	WALL 2	Scale	1:50
Material	70x135	Date	30.04.2019
Drawer	RP	File	Pelissanne 70 CC.dwg

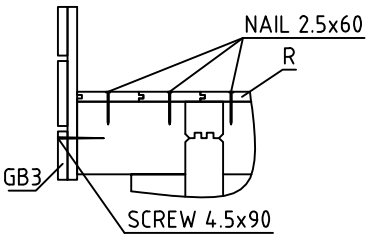

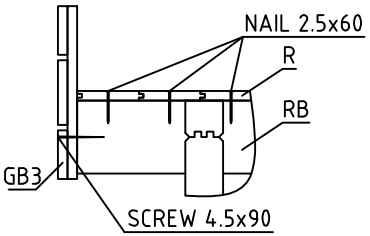

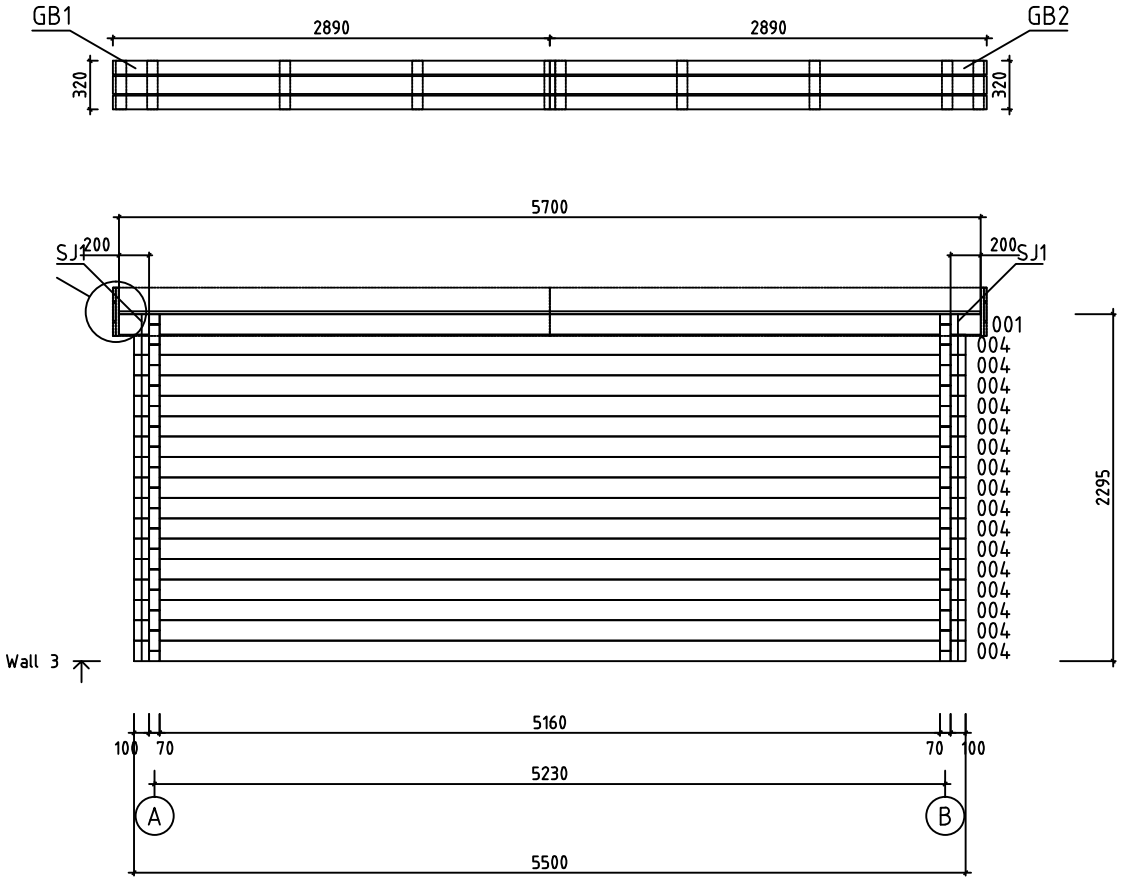

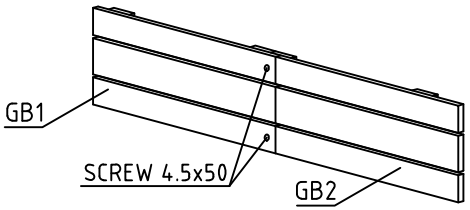

House	Pelissanne 70 CC	Sheet	10
Drawing	WALL 3	Scale	1:50
Material	70x135	Date	30.04.2019
Drawer	RP	File	Pelissanne 70 CC.dwg

Pos	Specification-Bestimmung-Spécification	PCS	Profile (mm)	L (mm)
001	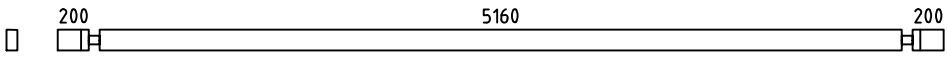	2	70x135	5700
002	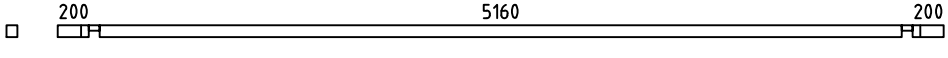	1	70x77	5700
003	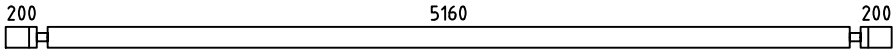	1	70x135	5700
004	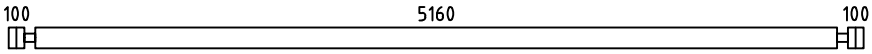	18	70x135	5500
005	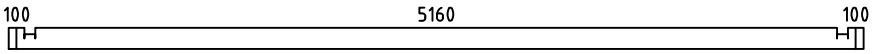	1	70x135	5500
006	SPARE BEAM-ERZATZBOHLE-MADRIER DE RÉSERVE 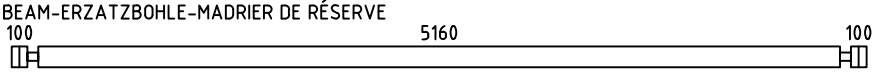	1	70x135	5500
007	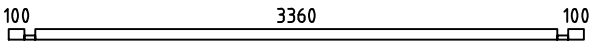	2	70x68	3700
008	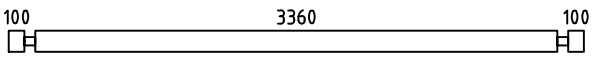	30	70x135	3700
014	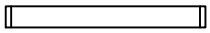	1	70x135	1284
015	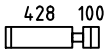	30	70x135	598
016		28	70x135	355
WA-1 WB-1	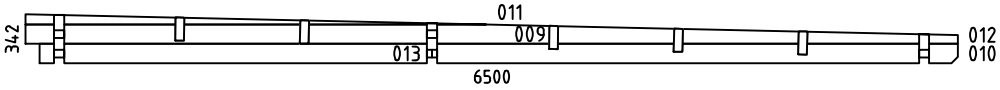	2	70x342	6500
HB	HIT BLOCK-SCHLAGHÖLZER-MADRIERS D´ASSEMBLAGE 	2	70x135	300
FS1	FIXING SLAT-BEFESTIGUNGSLEISTE-BAGUETTES POUR FIXER LES POTEAU 	6	45x90	500
P1	POST-PFOSTEN-POTEAU 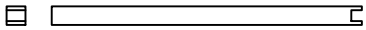	3	120x120	1995
RB1	ROOFBEAMS-DACHBALKEN-SOLIVES DE PLAFOND 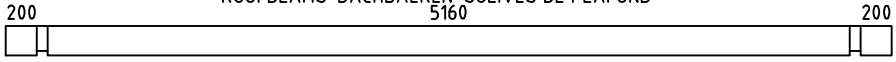	5	68x190	5700
R1	ROOFBOARD-DACHBRETT-VOLIGES or-oder-ou	50+1 65+1	18x114 18x88	4550
R2	ROOFBOARD-DACHBRETT-VOLIGES or-oder-ou	50+1 65+1	18x114 18x88	1950
GB1	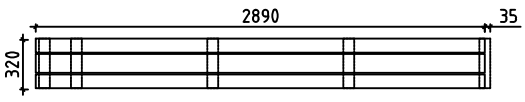	2	36x320	2890+35
GB2	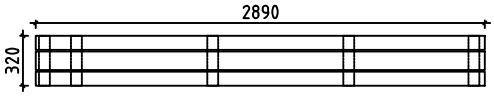	2	36x320	2890
GB3	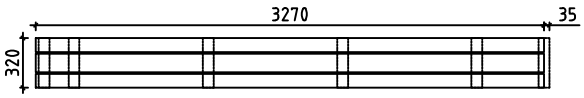	2	36x320	3270+35

House	Material	File	Sheet
Pelissanne 70 CC		Pelissanne 70 CC.dwg	11

Pos	Specification-Bestimmung-Spécification	PCS	Profile (mm)	L (mm)
GB4	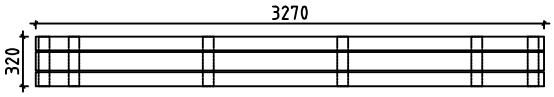	2	36x320	3270
ES1	EAVE SLAT-TRAUFENLEISTE-BAGUETTES POUR FIXER LES LATTES SOUS VOLIGES	4	30x40	2580
ES2	EAVE SLAT-TRAUFENLEISTE-BAGUETTES POUR FIXER LES LATTES SOUS VOLIGES	4	30x40	200
DT1	DOOR ASSEMBLING PROFILE-TÜR INSTALLIERUNGSPROFIL -TASSEAU DE FIXATION POUR PORTES	4	18x25	1970
WT1	WINDOW ASSEMBLING PROFILE-FENSTER INSTALLIERUNGSPROFIL -TASSEAU DE FIXATION POUR FENÊTRE	2	18x25	1840
SJ1	SCREW JOINT-GEWINDESTANGE -TIGES FILETÉS	2	M10	2320
SJ2	SCREW JOINT-GEWINDESTANGE -TIGES FILETÉS	2	M10	430
SJ3	SCREW JOINT-GEWINDESTANGE -TIGES FILETÉS	2	M10	2400
WCM	WALLBEAMS CONNECTING METAL-WANDBOHLEN BEFESTIGUNG -METALLE-PATTE D´ASSEMBLAGE	2	50	50
PR1	POST REGULATOR-PFOSTEN REGLER- PIED MÉTALLIQUE RÉGLABLE POUR POTEAU	3		
	NAIL-NAGEL-CLOUS FOR-FÜR-POUR COATING FOR ROOF-BESCHICHTUNG FÜR DACH-REVÊTEMENT DE TOIT	460	⌀2.5	20
	NAIL-NAGEL-CLOUS FOR-FÜR-POUR R1, R2	600	⌀2.5	60
	SCREWS-SCHRAUBEN-VIS FOR-FÜR-POUR WCM	8	⌀3.5	35
	SCREWS-SCHRAUBEN-VIS FOR-FÜR-POUR ES1, ES2, GB1, GB2, GB3, GB4, P1, PR1	70	⌀4.5	50
	SCREWS-SCHRAUBEN-VIS FOR-FÜR-POUR GB1, GB2, GB3, GB4	20	⌀4.5	70
	SCREWS-SCHRAUBEN-VIS FOR-FÜR-POUR GB1, GB2, GB3, GB4, FS1	40	⌀4.5	90
	SCREWS-SCHRAUBEN-VIS FOR-FÜR-POUR WA-1, WB-1, RB1	30	⌀6.0	160
	COATING FOR ROOF-BESCHICHTUNG FÜR DACH-REVÊTEMENT DE TOIT	4,0	R = 15m	
	DOUBLEDOOR-DOPPELTÜR-DOUBLE PORTE (right-rechts-droit) ORT__1H P 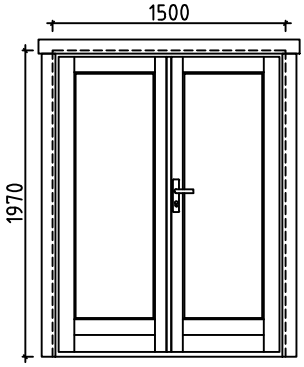	2 2 2 2	1500	1970

House Pelissanne 70 CC	Material	File Pelissanne 70 CC.dwg	Sheet 12

Pos	Specification-Bestimmung-Spécification	PCS	Profile (mm)	L (mm)
	WINDOW-FENSTER-VENSTER (right-rechts-rechts) ORT_ECO P	1	565	1840
	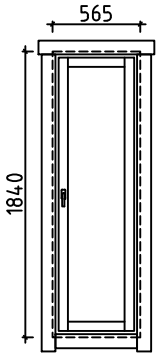 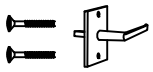	1		
		1		

House Pelissanne 70 CC	Material	File Pelissanne 70 CC.dwg	Sheet 13

#001	1,3	5700	2
#002	2	5700	1
#003	2	5700	1
#004	1,2,3	5500	18
#005	1	5500	1
#006		5500	1
#007	A,B	3700	2
#008	A,B	3700	30
#009	A,B	3685	2
#010	A,B	3665	2
#011	A,B	3215	2
#012	A,B	2815	2
#013	A,B	2735	2
#014	2	1284	1
#015	2	598	30
#016	2	355	28