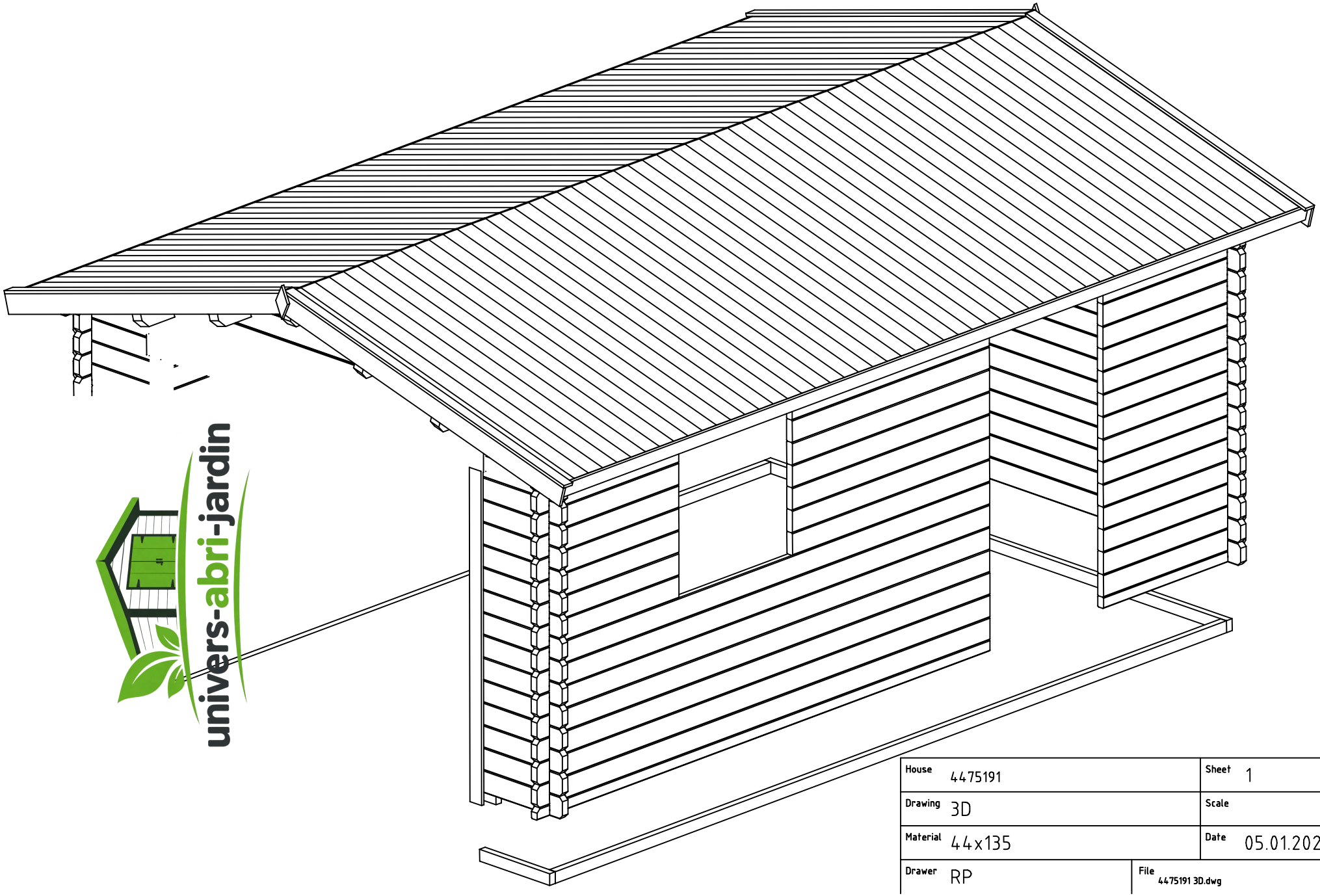

univers-abri-jardin

House	4475191	Sheet	1
Drawing	3D	Scale	
Material	44x135	Date	05.01.2024
Drawer	RP	File	4475191 3D.dwg

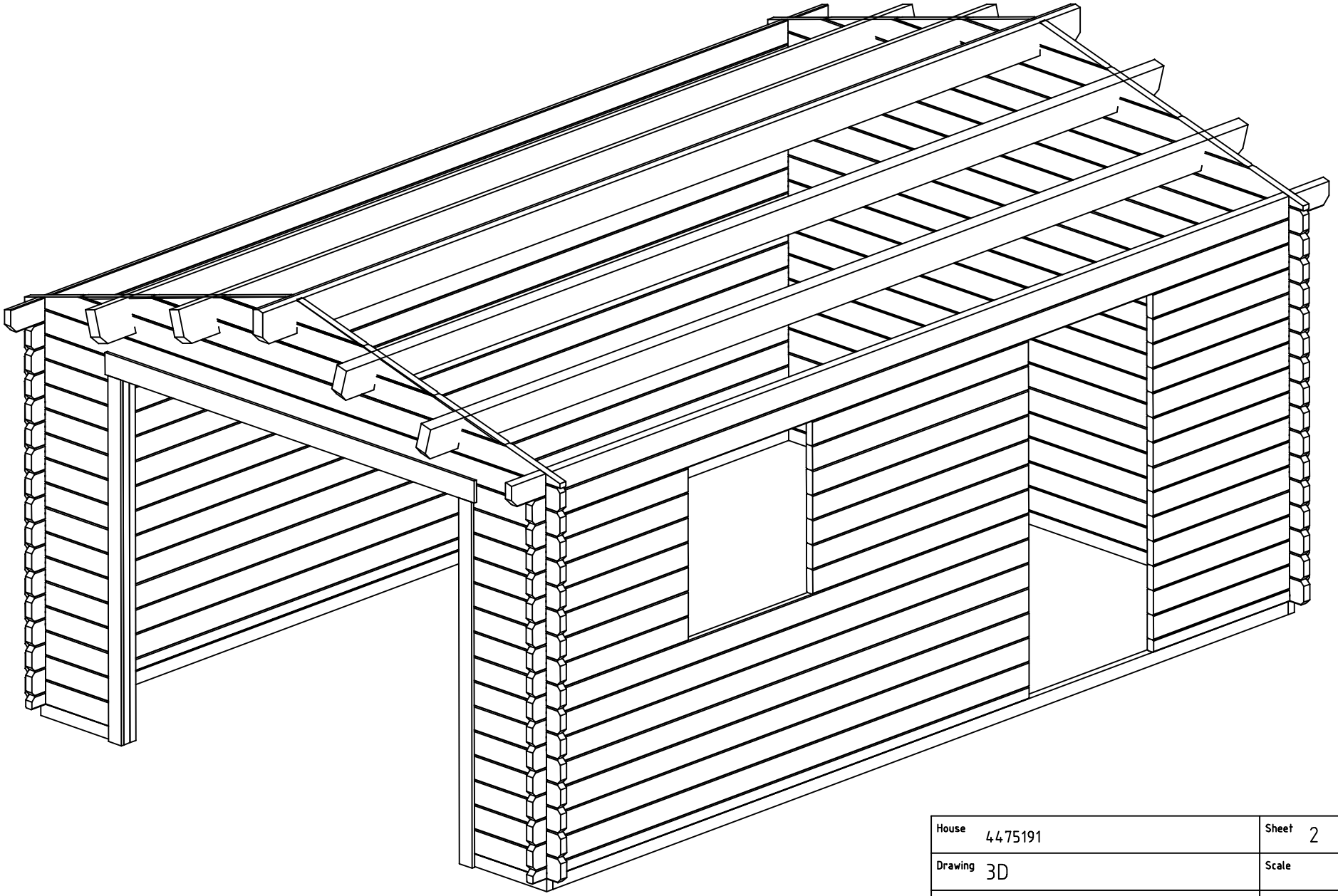

House	4475191	Sheet	2
Drawing	3D	Scale	
Material	44x135	Date	05.01.2024
Drawer	RP	File	4475191 3D.dwg

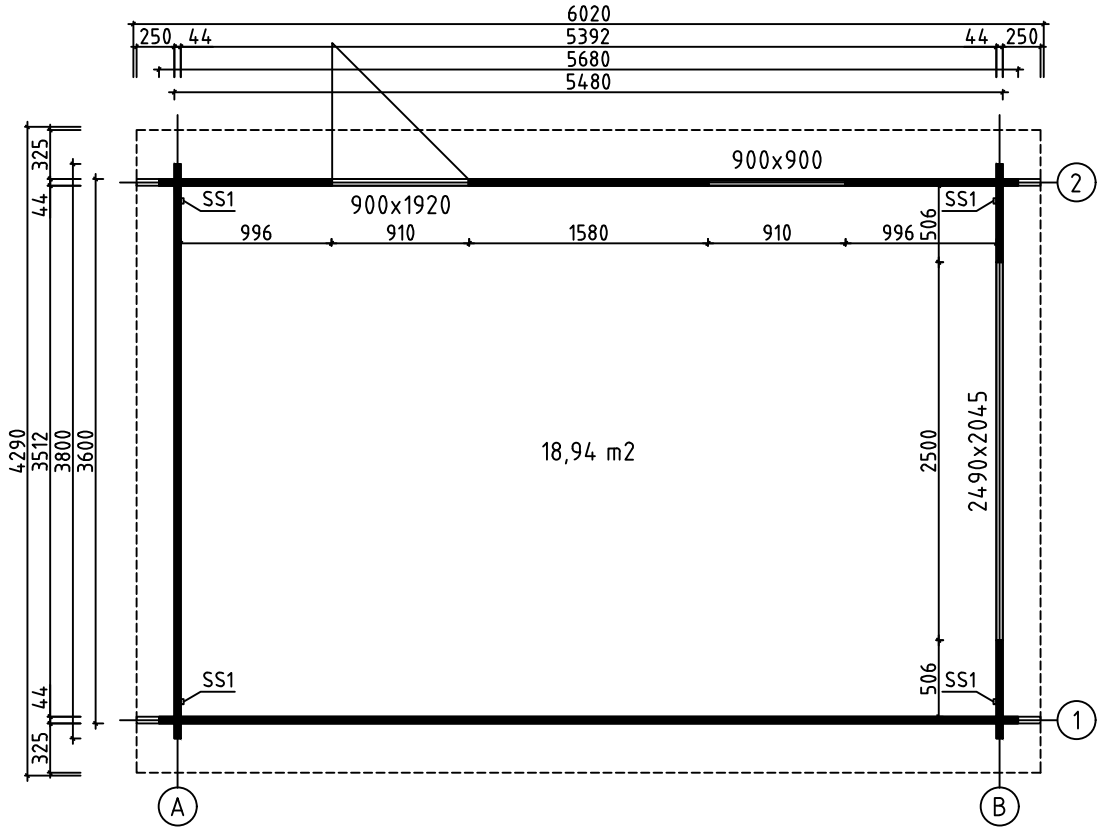

House	4475191	Sheet	3
Drawing	GROUNDPLAN	Scale	1:50
Material	44x135	Date	05.01.2024
Drawer	RP	File	4475191.dwg

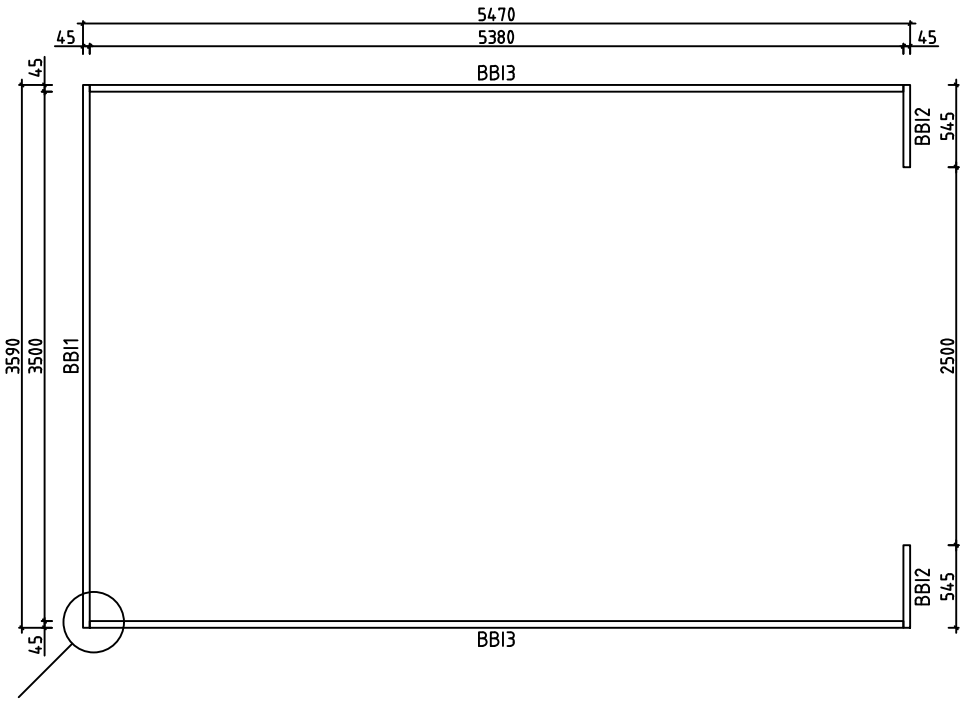

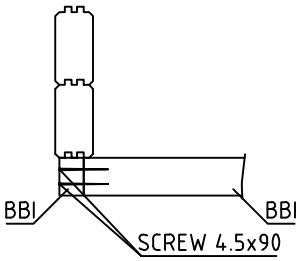

House	4475191	Sheet	4
Drawing	BASE BEAMS	Scale	1:50
Material	45x70	Date	05.01.2024
Drawer	RP	File	4475191.dwg

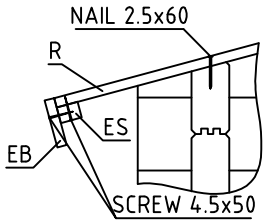

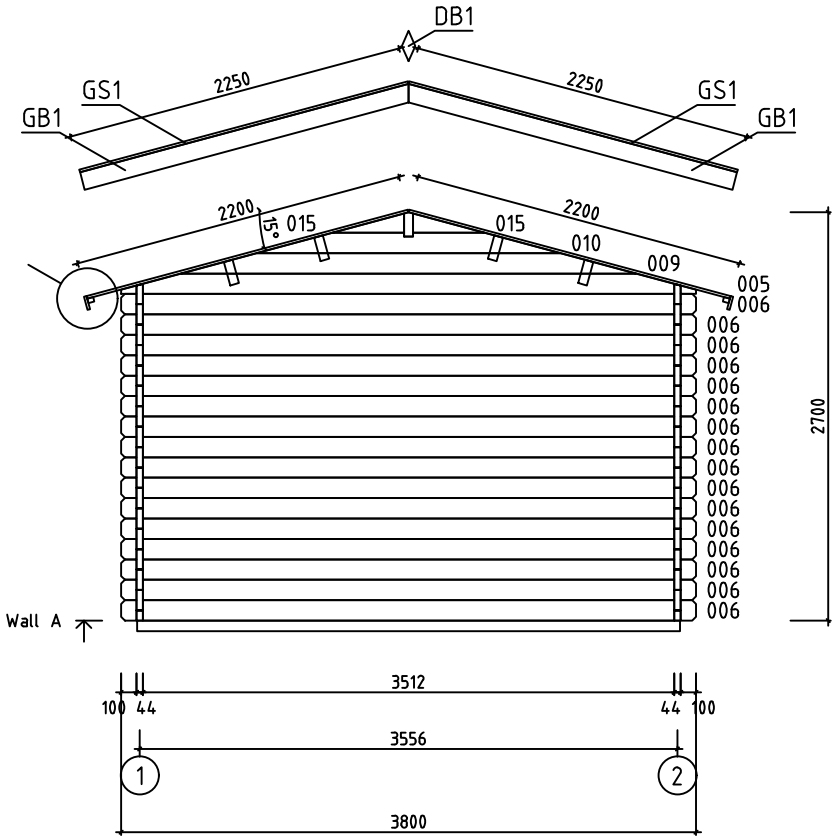

House	4475191	Sheet	5
Drawing	WALL A	Scale	1:50
Material	44x135	Date	05.01.2024
Drawer	RP	File	4475191.dwg

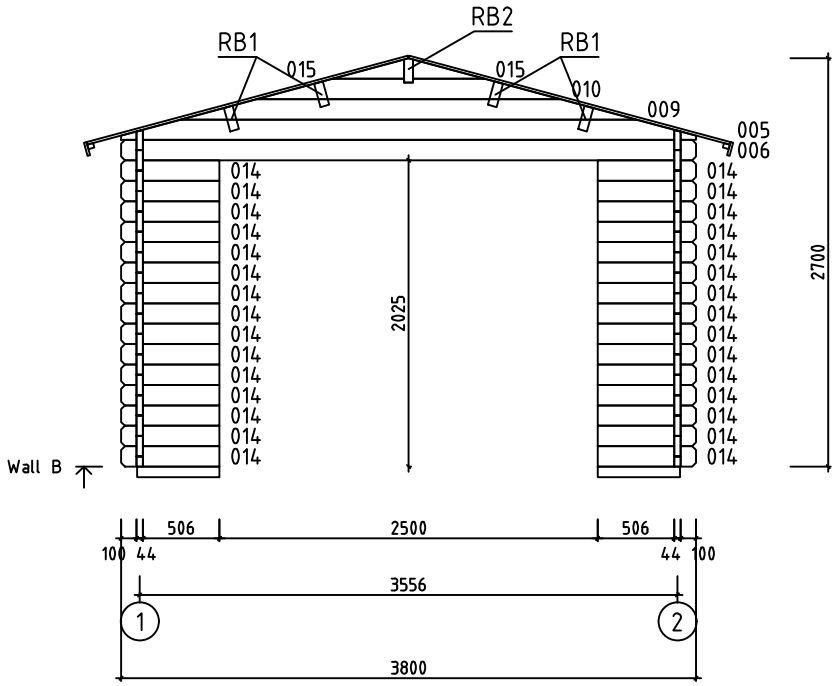

House	4475191	Sheet	6
Drawing	WALL B	Scale	1:50
Material	44x135	Date	05.01.2024
Drawer	RP	File	4475191.dwg

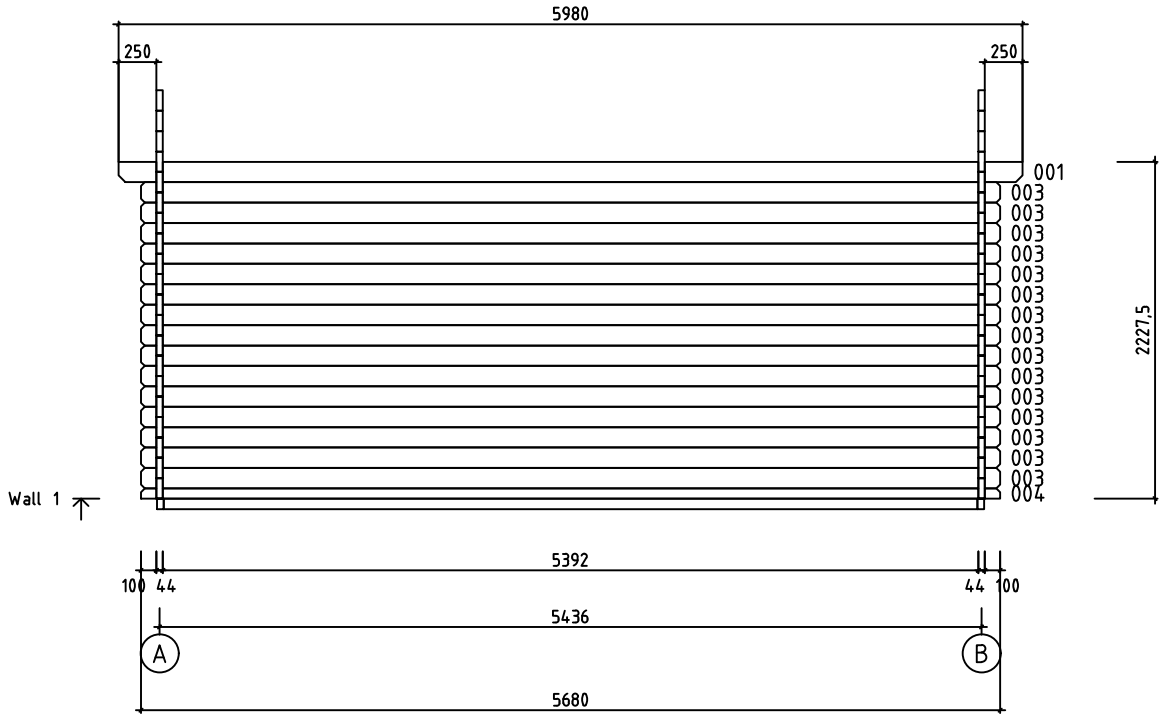

House	4475191	Sheet	7
Drawing	WALL 1	Scale	1:50
Material	44x135	Date	05.01.2024
Drawer	RP	File	4475191.dwg

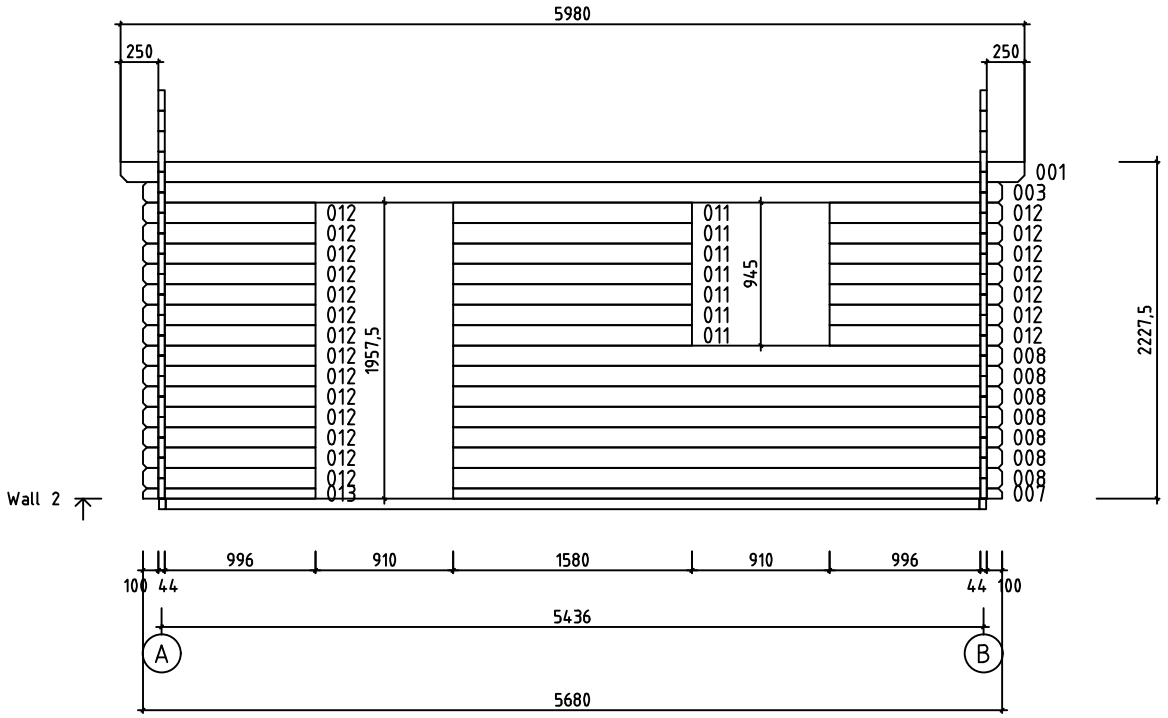

House	4475191	Sheet	8
Drawing	WALL 2	Scale	1:50
Material	44x135	Date	05.01.2024
Drawer	RP	File	4475191.dwg

Pos	Specification-Bestimmung-Spécification	PCS	Profile (mm)	L (mm)
001	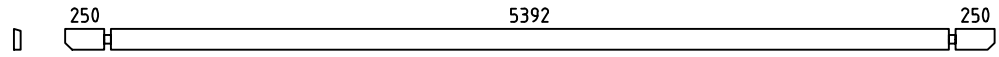	2	44x135	5980
002	SPARE BEAM-ERZATZBOHLE-MADRIER DE RÉSERVE 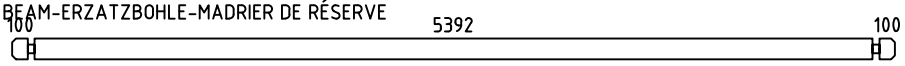	1	44x135	5680
003	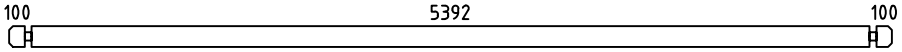	16	44x135	5680
004	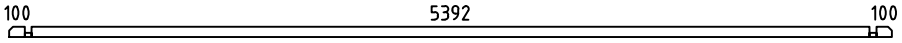	1	44x68	5680
006	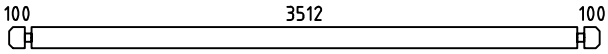	17	44x135	3800
007	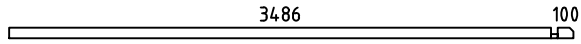	1	44x68	3630
008	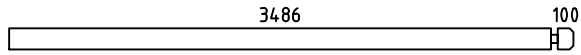	7	44x135	3630
011	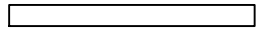	7	44x135	1580
012	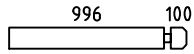	21	44x135	1140
013	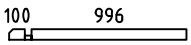	1	44x68	1140
014	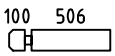	30	44x135	650
WA-1 WB-1	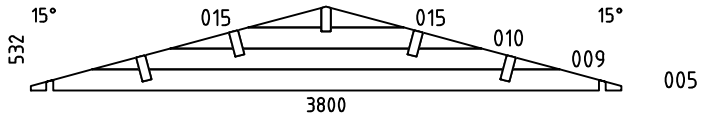	2	44x532	3800
HB	HIT BLOCK-SCHLAGHÖLZER-MADRIERS D´ASSEMBLAGE 	2	44x135	300
BBI3	BASE FRAME-LAGERHÖLZER-LAMBOURDES IMM	2	45x70	5380
BBI1	BASE FRAME-LAGERHÖLZER-LAMBOURDES IMM	1	45x70	3590
BBI2	BASE FRAME-LAGERHÖLZER-LAMBOURDES IMM	2	45x70	545
FS1	FIXING MECHANISM OF THE ELECTRIC MOTOR-BEFESTIGUNGSMECHANISMUS DES ELEKTROMOTORS-MADRIER DE FIXATION DU MOTEUR ÉLECTRIQUE 	1	45x90	3580
RB1	ROOFBEAMS-DACHBALKEN-SOLIVES DE PLAFOND 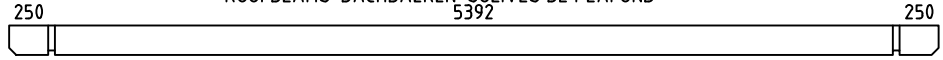	4	68x190	5980
RB2	ROOFBEAMS-DACHBALKEN-SOLIVES DE PLAFOND 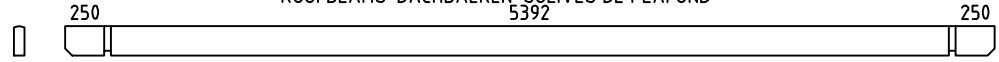	1	68x190	5980
R1	ROOFBOARD-DACHBRETT-VOLIGES or-oder-ou	106+2 138+2	18x114 18x88	2200
GB1	GABLE BOARD-GIEBELBLENDE-PLANCHE DE RIVE 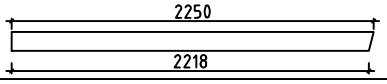	4	18x120	2250
GS1	ROOF FELT FILLET-GIEBELLEISTE-BAGUETTES POUR FIXER LES PLANCHES DE RIVE 	4	18x70	2250
EB1	EAVE BOARD-TRAUFBRETT-LATTES SOUS VOLIGES 	4	18x90	2990
ES1	EAVE SLAT-TRAUFENLEISTE-BAGUETTES POUR FIXER LES LATTES SOUS VOLIGES 	4	30x40	2990

House 4475191	Material	File 4475191.dwg	Sheet 9

Pos	Specification-Bestimmung-Spécification	PCS	Profile (mm)	L (mm)
DB1	DIAMOND-RAUTE-ELÉMENTS DE DÉCORATION	2	18x90	200
SS1	STORM SLAT-STURMLEISTE -BAGUETTE DE TEMPETE TYPE 2	4	18x35	2130
LCM	CONNECTING METAL-VERBINDEN VON METALL-CONNECTEUR MÉTALLIQUE	2	45	135
	SCREWS-SCHRAUBEN-VISSER FOR-FÜR-POUR SS1	8	M8	90
	WASHER-SCHEIBE-RONDELLE FOR-FÜR-POUR SS1	8	M8	
	NUT-NUSS-ÉCROU FOR-FÜR-POUR SS1	8	M8	
	NAIL-NAGEL-CLOUS FOR-FÜR-POUR COATING FOR ROOF-BESCHICHTUNG FÜR DACH-REVÉTEMENT DE TOIT	360	ϕ2.5	20
	NAIL-NAGEL-CLOUS FOR-FÜR-POUR R1	560	ϕ2.5	60
	SCREWS-SCHRAUBEN-VIS FOR-FÜR-POUR LCM	24	ϕ3.5	35
	SCREWS-SCHRAUBEN-VIS FOR-FÜR-POUR GB1, GS1, EB1, ES1, DB1, L1, L2	110	ϕ4.5	50
	SCREWS-SCHRAUBEN-VIS FOR-FÜR-POUR 004, 007, 013, FS1, P1, P2, P3, P4 BBI1, BBI2, BBI3	60	ϕ4.5	90
	SCREWS-SCHRAUBEN-VIS FOR-FÜR-POUR WA-1, WB-1, RB1, RB2	30	ϕ6.0	160
	COATING FOR ROOF-BESCHICHTUNG FÜR DACH-REVÉTEMENT DE TOIT	3,0	R = 15m	
	FRAME AROUND ENTRANCE-RAHMEN UM DEN EINGANG-CADRE AUTOUR DE L'ENTRÉE	1	2490	2045
	DOOR-TÜR-PORTE (right-rechts-droit) ORT_ECO P	1	900	1920
		1		
		1		
		1		

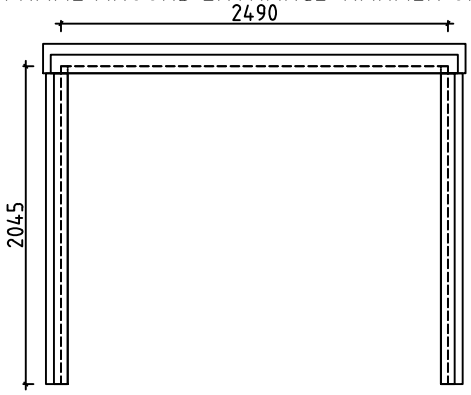

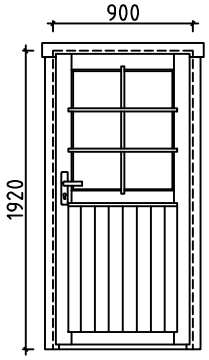

House 4475191	Material	File 4475191.dwg	Sheet 10

Pos	Specification-Bestimmung-Spécification	PCS	Profile (mm)	L (mm)
	WINDOW-FENSTER-FENÉTRE (right-rechts-droit) ORT_ECO P	1	900	900
	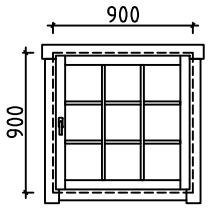			
		1		
		1		
		1		

House 4475191	Material	File 4475191.dwg	Sheet 11

Pos	Specification-Bestimmung-Spécification	PCS	Profile (mm)	L (mm)
P1	BEAM-BALKEN-POUTRE	1	43x190	2720
P2	BEAM-BALKEN-POUTRE	2	43x140	2000
P3	BEAM-BALKEN-POUTRE	1	45x46	2400
P4	BEAM-BALKEN-POUTRE	2	45x46	2045
L1	BOARD-BRETT-PLANCHE	1	18x120	2620
L2	BOARD-BRETT-PLANCHE	2	18x90	2000
		1	107x2190	2720

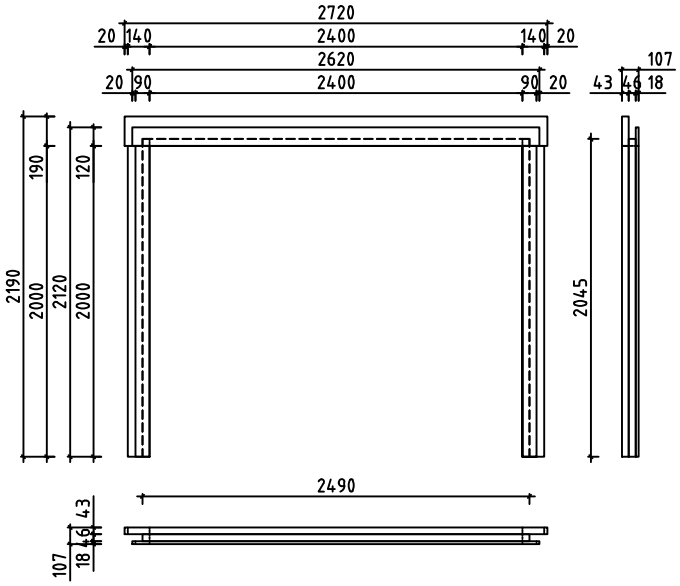

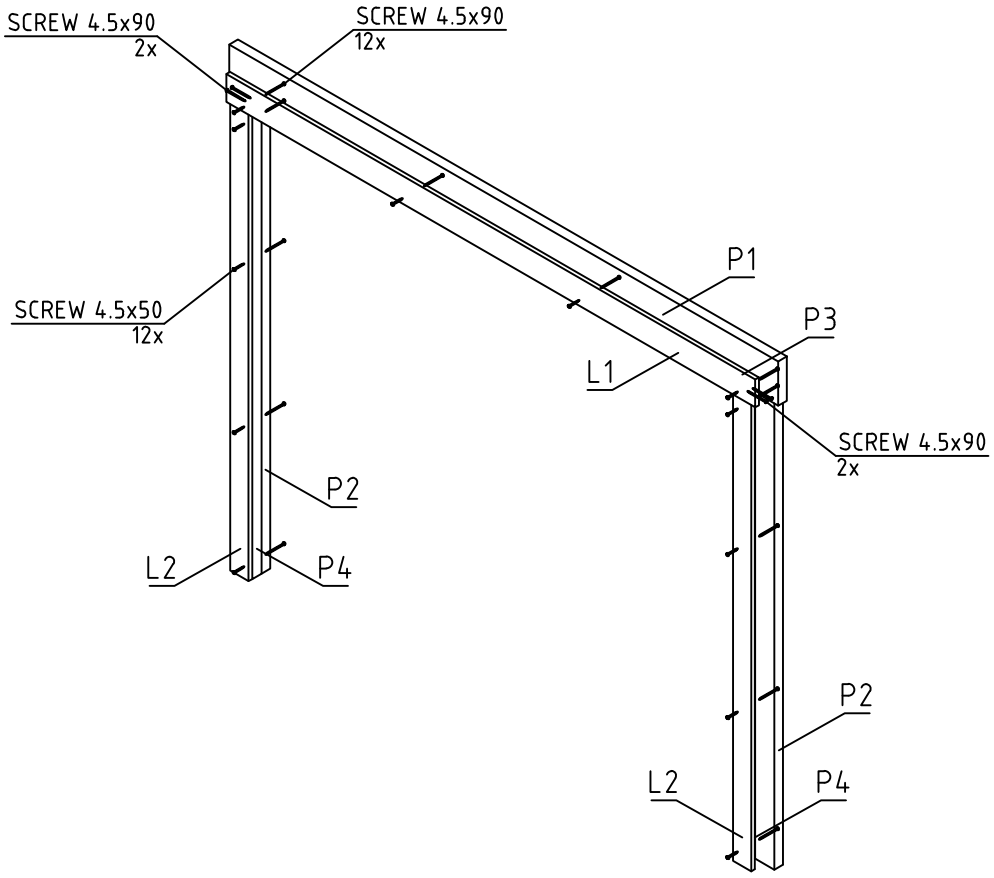

House 4475191	Material	File 4475191.dwg	Sheet 12

#001	1,2	5980	2
#002		5680	1
#003	1,2	5680	16
#004	1	5680	1
#005	A,B	3800	2
#006	A,B	3800	17
#007	2	3630	1
#008	2	3630	7
#009	A,B	3010	2
#010	A,B	2007	2
#011	2	1580	7
#012	2	1140	21
#013	2	1140	1
#014	B	650	30
#015	A,B	472	4