univers-abri-jardin

OWNER'S MANUAL /

lnstructions for Assembly S1004B Garage Series

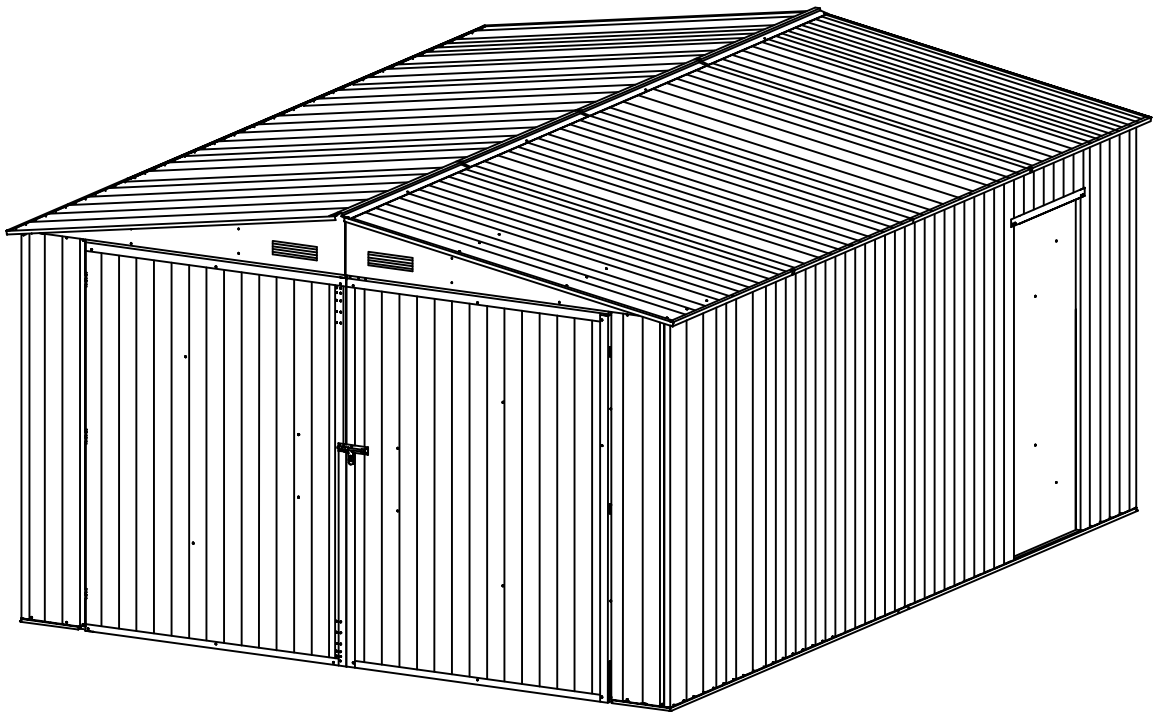

Requires two-three people and takes 6-7 hours for Installation.

Assembly Preparation

Owner's Manual
Please check local building codes regarding footings, location and other requirements before beginning construction. Study and understand this owner's manual of important information and helpful tips for easier and more enjoyable assembly.

Assembly instructions:
Reviewing all instructions and the appropriate information before you begin, make sure following the step sequence carefully for successful results.

Flooring base:
Your storage building must be anchored to prevent wind damage and A base may necessary to be constructed with a square and level building. The base is not included in the kit which may need purchase separately or may construct a foundation and anchoring system of your own. A good location for the storage building is a level area with good drainage.

Parts and Parts List:
Check to be sure that you have all the necessary parts for your building.

Tools you need:
(Please tear off the safety protection layer before the assembly, keep the part number label if needed)

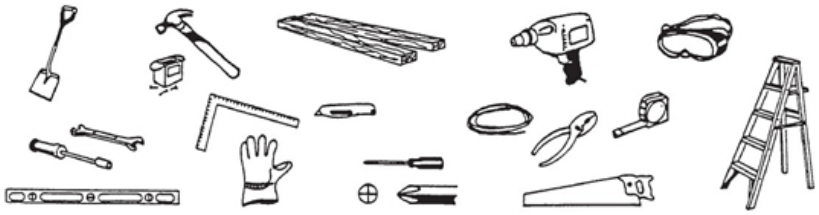

Safety must be put in the No. 1 position:
1 Select a dry and calm day for your assembly. Team works (Two or more people) are required during the assembly;
2 Wearing safety gloves, eye protection and long sleeves during the assembly to prevent injury; Pay attention to the sharp edge of some parts;
3 Children and pets are not allowed entering into the construction site;
4 Never concentrate your total weight on the roof of the building. When using a step ladder make sure that it is safety;

Care & Maintenance:
1 Keep the shed clean with soft cloth, use water if necessary;
2 Keep the door tracks clear of dirt and other stuff that prevent them from sliding easily.
3 Clean the snow with necessary tools to make sure it is safe to enter into.
4 The shed is not made for living but storing stuff.
5 Please add some oil on the top and bottom door sliding channel to make door slides smoothly.

Y-1		1		Y-21		1		Y-35		2
Y-1a		1		Y-21a		1		Y-36		12
Y-2		1		Y-22		1		Y-37		2
Y-2a		2		Y-22a		1		Y-40		1
Y-B2c		2		Y-23		1		Y-41		1
Y-3		1		Y-24		1		Y-44		2
Y-3a		1		Y-25a		2		Y-42		1
Y-2b		1		Y-25		2		Y-43		1
Y-4		2		Y-26		8		Y-49		6
Y-5		2		Y-28		2		Y-50		6
Y-6		2		Y-28a		2		Y-51		6
Y-7		1		Y-27		4		Y-53		2
Y-12		2		Y-29		2		Y-54		2
Y-13		2		Y-29a		2		Y-66		2
Y-14		2		Y-30		2		Y-55		8
Y-14a		2		Y-30a		2		Y-56		1
Y-16		1		Y-31		2		Y-57		1
Y-16a		1		Y-31a		1		Y-52		2
Y-B8		1		Y-31b		1		Y-61		2
Y-B8a		2		Y-32		16		Y-62		2
Y-9		1		Y-32a		1		Y-58		6
Y-9a		1		Y-34		1		Y-59		6
Y-10		1		Y-39		2		Y-60		1
Y-10a		1		Y-39a		2		Y-60a		1
Y-B11		2		Y-33		3		Y-63		2
Y-B11a		2		Y-33a		1		Y-B45		670
Y-15		1		Y-38		2		Y-B46		30
Y-15a		1		Y-39b		1		Y-B47		140
Y-B17		2		Y-39c		1		T-P1		2
Y-B17a		2						T-P2		2
Y-B19		2						T-P3		4
Y-B19a		2						T-P4		2
Y-B18		1						TP5A		4
Y-B18a		1						T-P6		1
Y-B20		1						T-P9		413
Y-B20a		1						T-P10		64
Y-48		1								

S1004B :

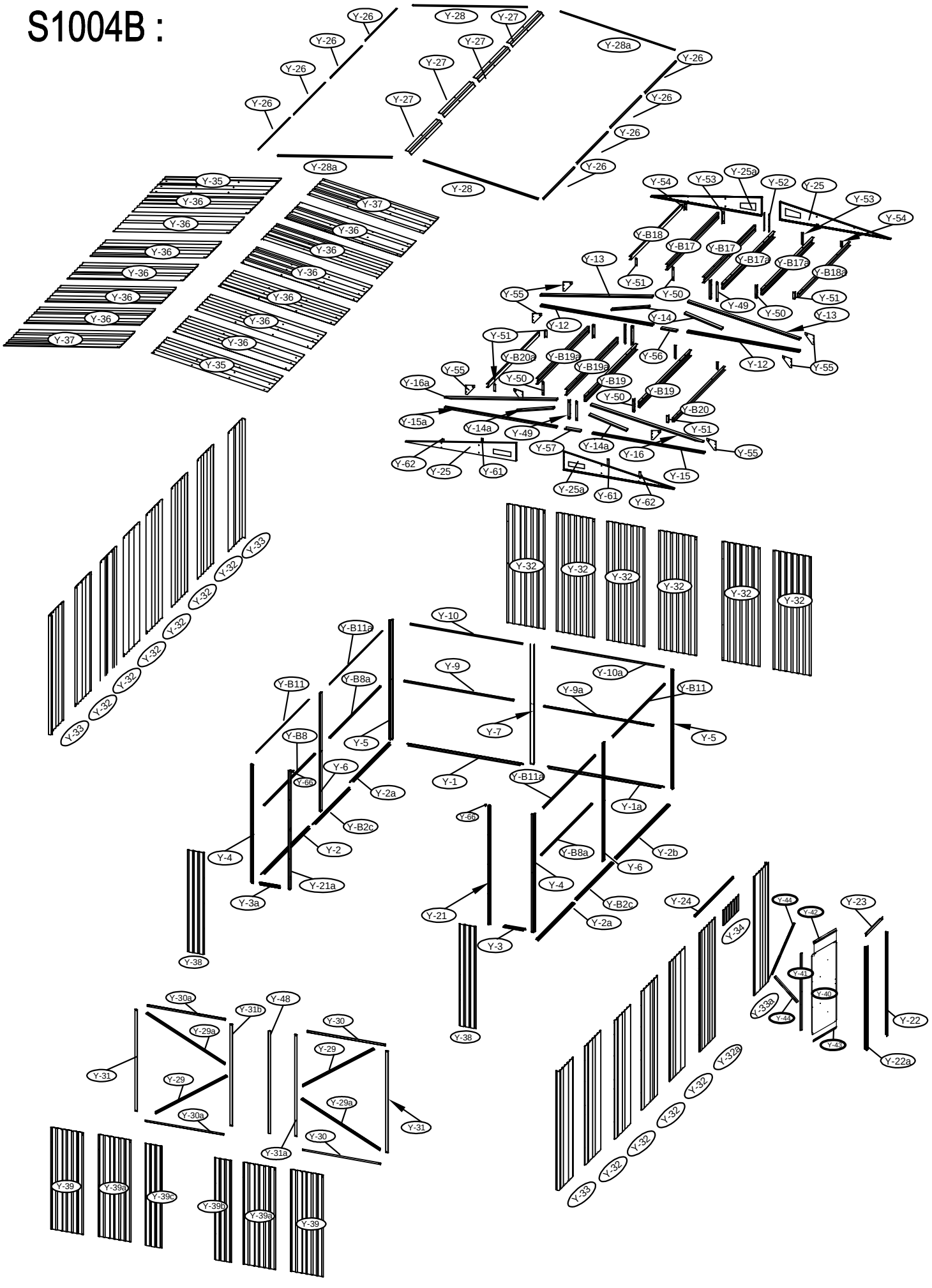
Y-26
Y-28
Y-27
Y-28a
Y-35
Y-36
Y-37
Y-54
Y-53
Y-25a
Y-52
Y-25
Y-B18
Y-B17
Y-B17a
Y-B18a
Y-13
Y-51
Y-55
Y-50
Y-49
Y-14
Y-12
Y-B20a
Y-B19a
Y-56
Y-16a
Y-B19
Y-B20
Y-15a
Y-14a
Y-57
Y-16
Y-15
Y-62
Y-61
Y-25a
Y-32
Y-33
Y-10
Y-B11a
Y-9
Y-10a
Y-9a
Y-B11
Y-B8
Y-B8a
Y-7
Y-5
Y-6
Y-6a
Y-2a
Y-B2c
Y-2
Y-4
Y-21a
Y-3a
Y-1
Y-1a
Y-2b
Y-21
Y-3
Y-38
Y-24
Y-34
Y-44
Y-42
Y-23
Y-41
Y-40
Y-33a
Y-22
Y-43
Y-22a
Y-30a
Y-31b
Y-48
Y-29a
Y-31
Y-29
Y-30
Y-30a
Y-31a
Y-39
Y-39a
Y-39c
Y-39b
Y-39d

Size of S1004B :

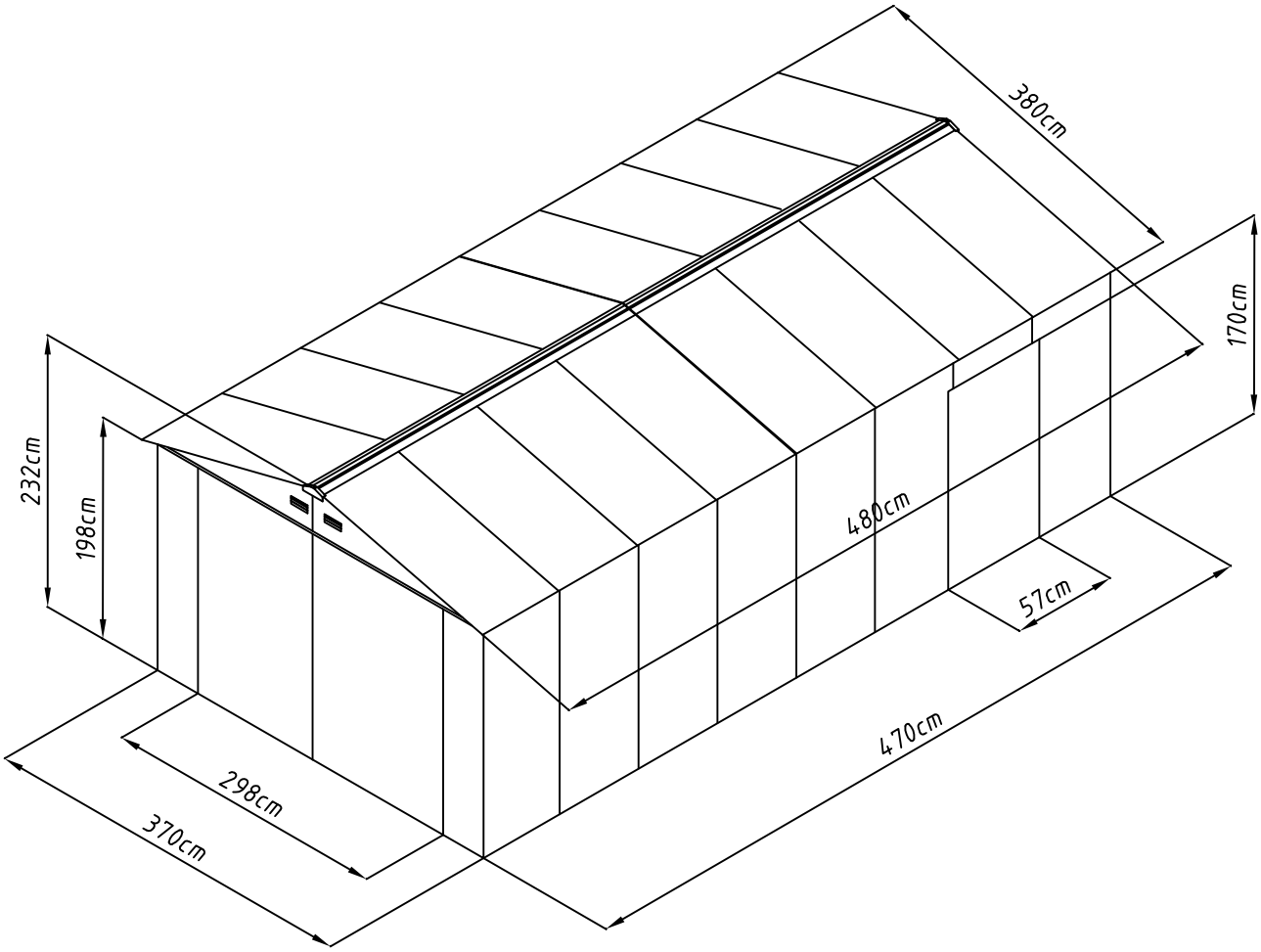

Area of installation requirement:

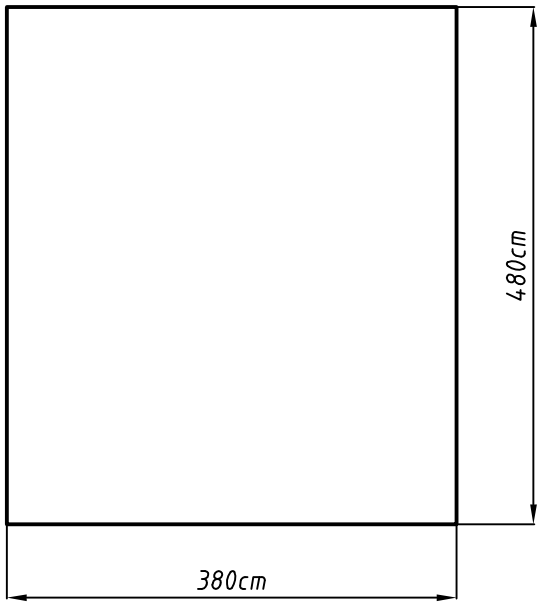

1

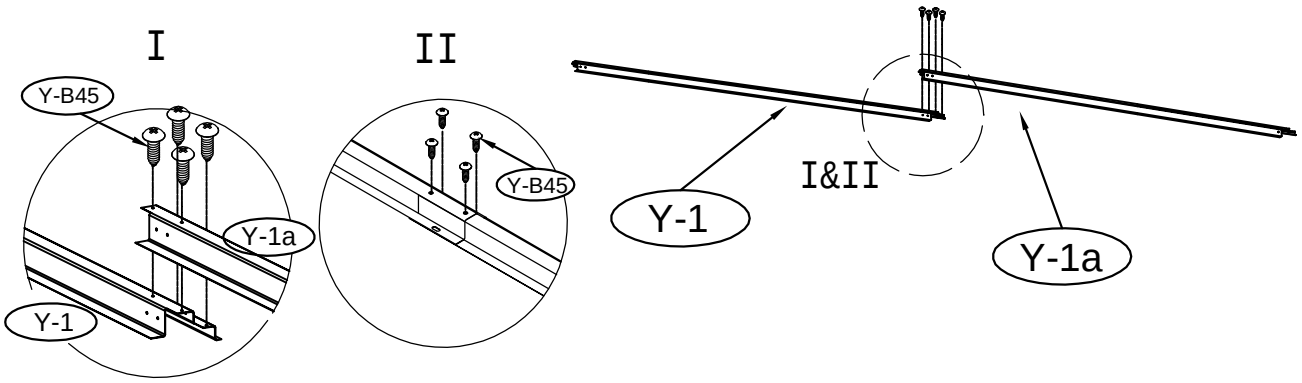
I
II
Y-B45
Y-1a
Y-1
Y-B45
I&II
Y-1
Y-1a

2

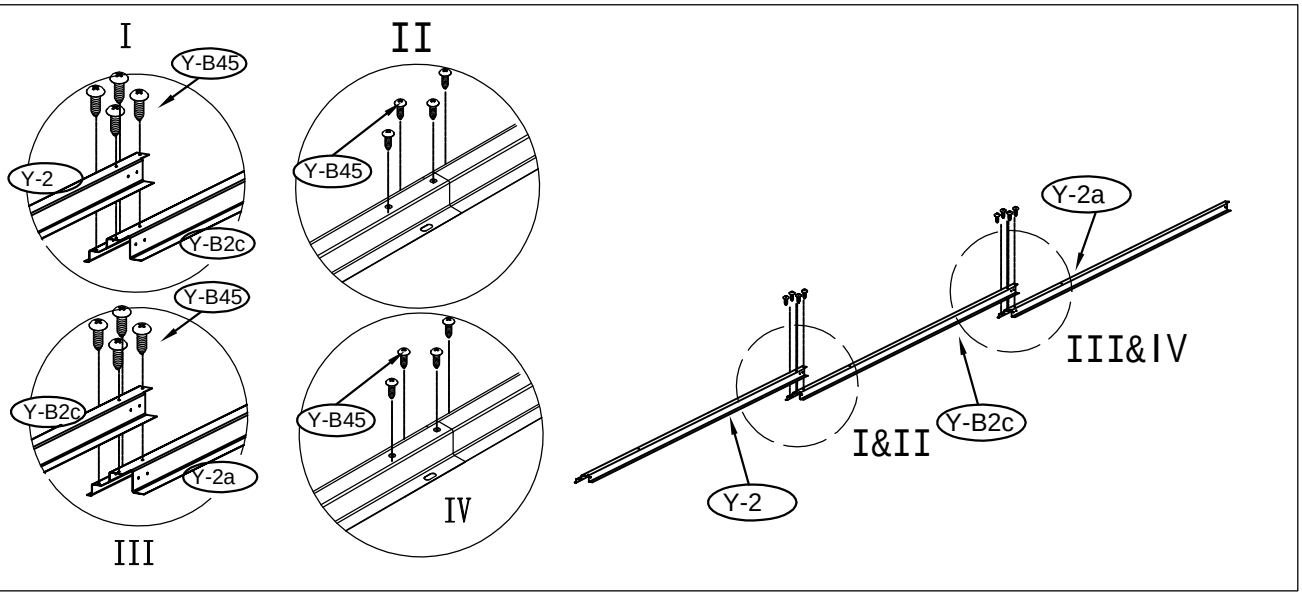
I
II
Y-B45
Y-2
Y-B2c
Y-B45
Y-B45
Y-B2c
Y-2a
Y-B45
III
IV
Y-2a
III&IV
I&II
Y-B2c
Y-2

3

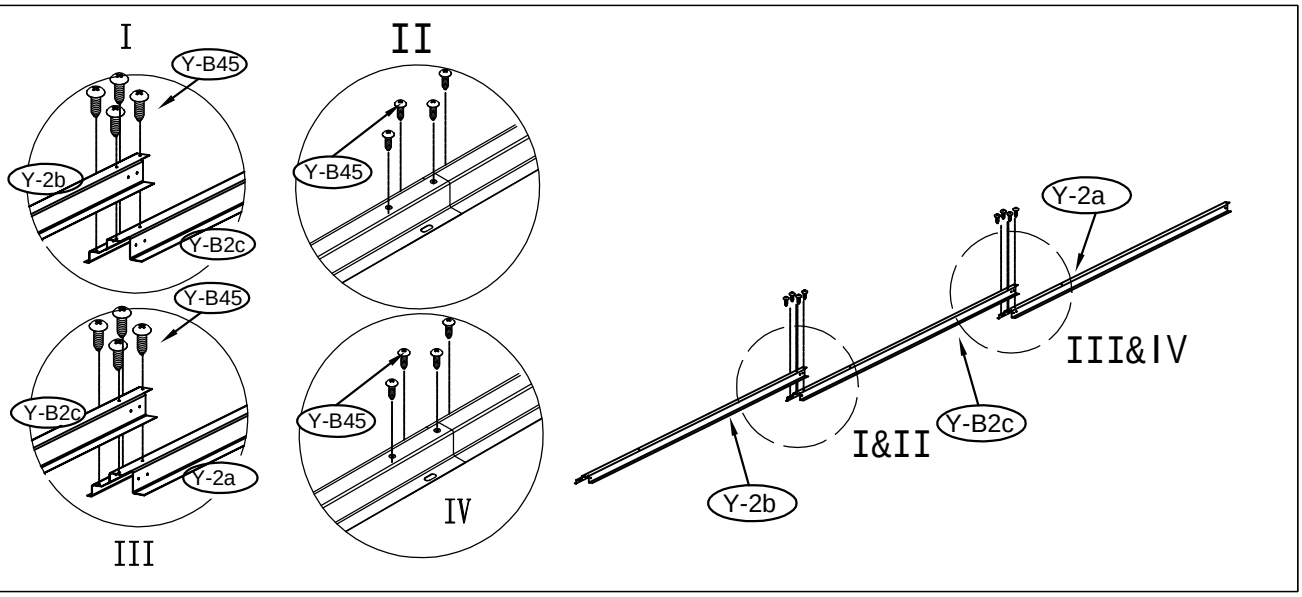
I
II
Y-B45
Y-2b
Y-B2c
Y-B45
Y-B45
Y-B45
Y-B2c
Y-2a
Y-B45
III
IV
Y-2a
III&IV
I&II
Y-B2c
Y-2b

4

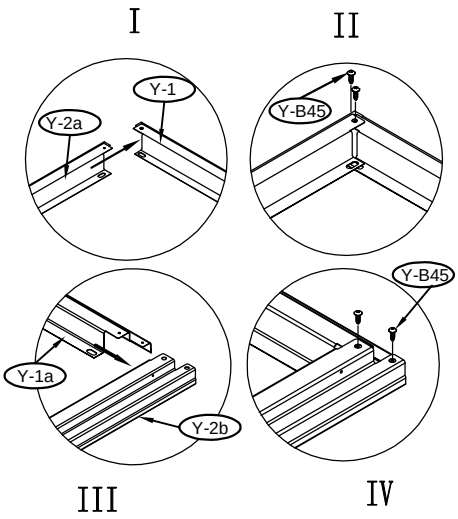
I
II
Y-1
Y-2a
Y-B45
Y-B45
Y-1a
Y-2b
III
IV

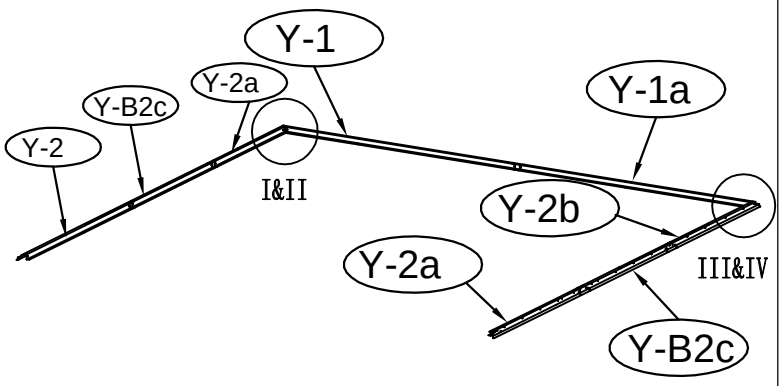
Y-1
Y-2a
Y-B2c
Y-2
Y-1a
I&II
Y-2b
Y-2a
III&IV
Y-B2c

5

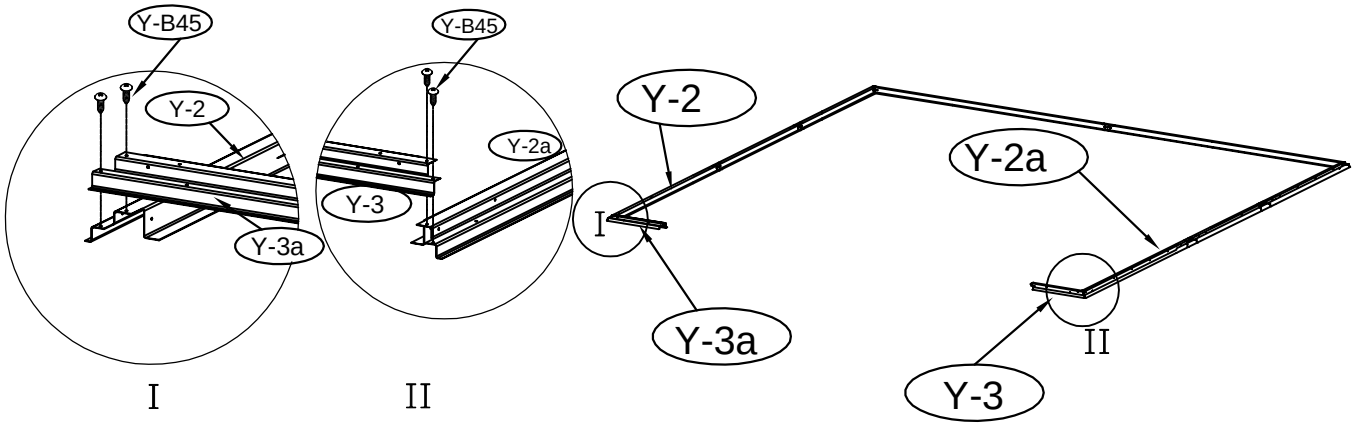
Y-B45
Y-2
Y-3a
Y-B45
Y-2a
Y-3
I
II
Y-2
Y-2a
I
Y-3a
II
Y-3

6

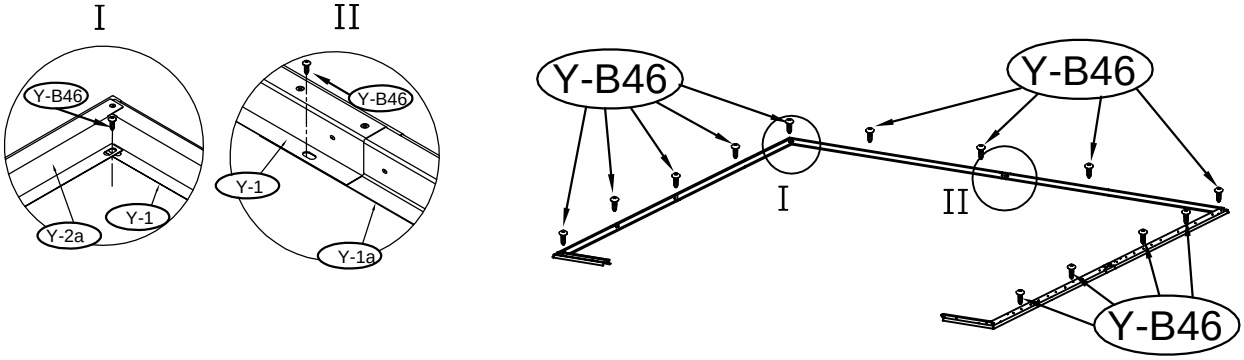
I
II
Y-B46
Y-2a
Y-1
Y-B46
Y-1
Y-1a
Y-B46
Y-B46
I
II
Y-B46

7

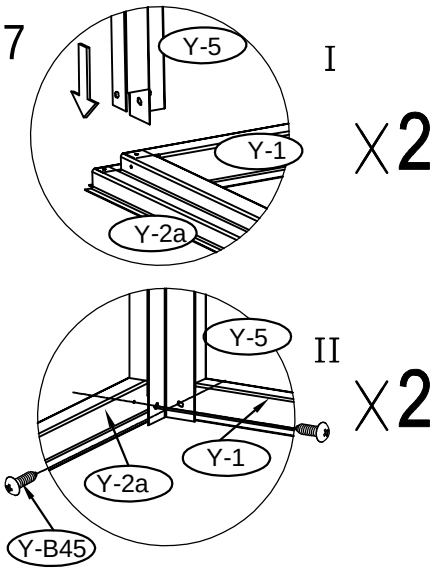
Y-5
I
Y-1
X2
Y-2a
Y-5
II
X2
Y-1
Y-2a
Y-B45

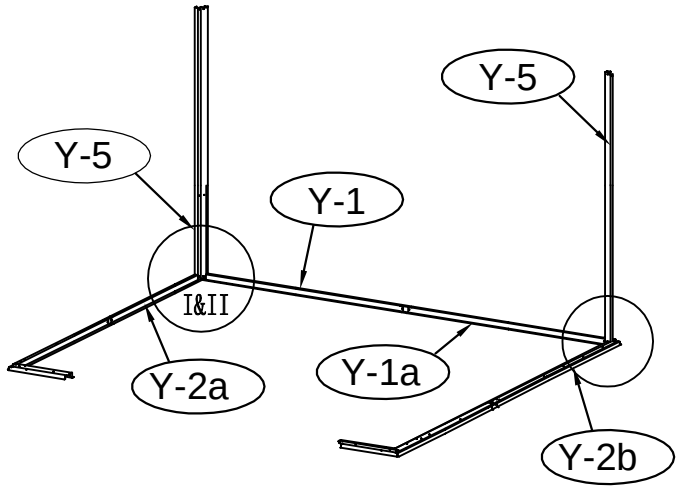
Y-5
Y-5
Y-1
I&II
Y-2a
Y-1a
Y-2b

8

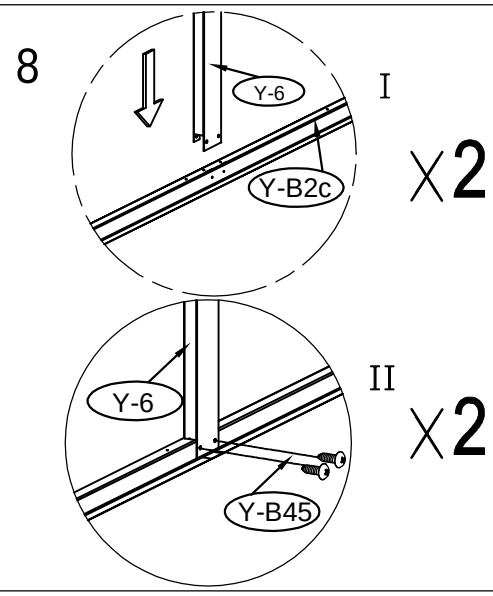
Y-6
I
Y-B2c
X2
Y-6
II
X2
Y-B45

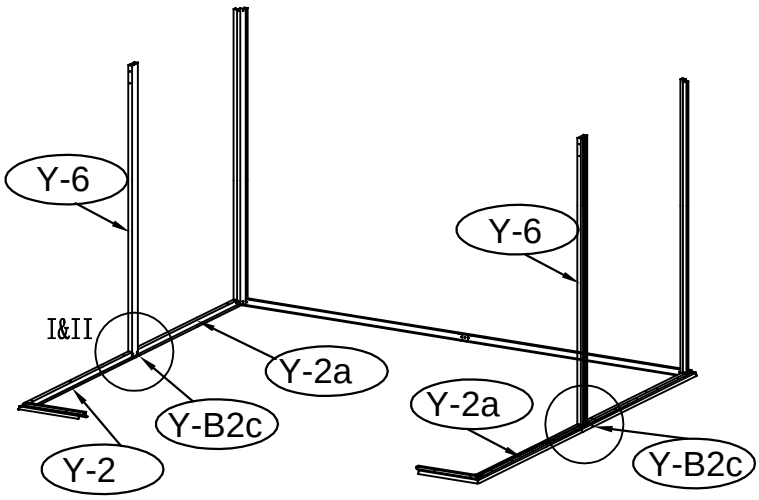
Y-6
Y-6
I&II
Y-2a
Y-2a
Y-B2c
Y-2
Y-B2c

9

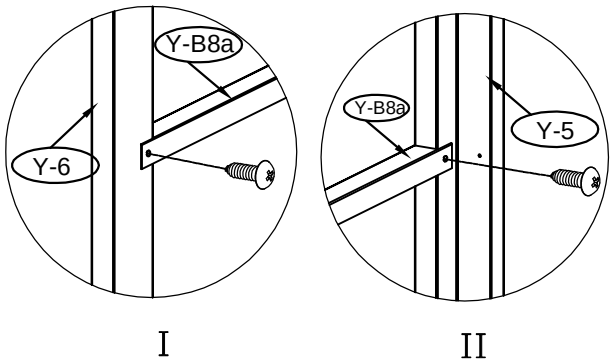
Y-B8a
Y-6
Y-B8a
Y-5
I
II

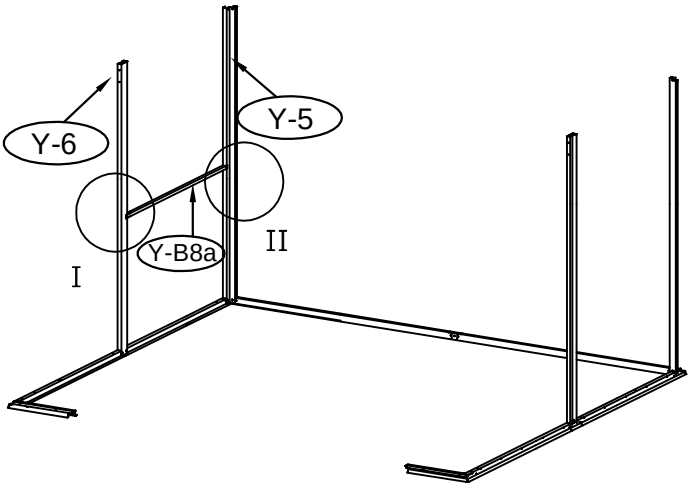
Y-6
Y-5
Y-B8a
II
I

10

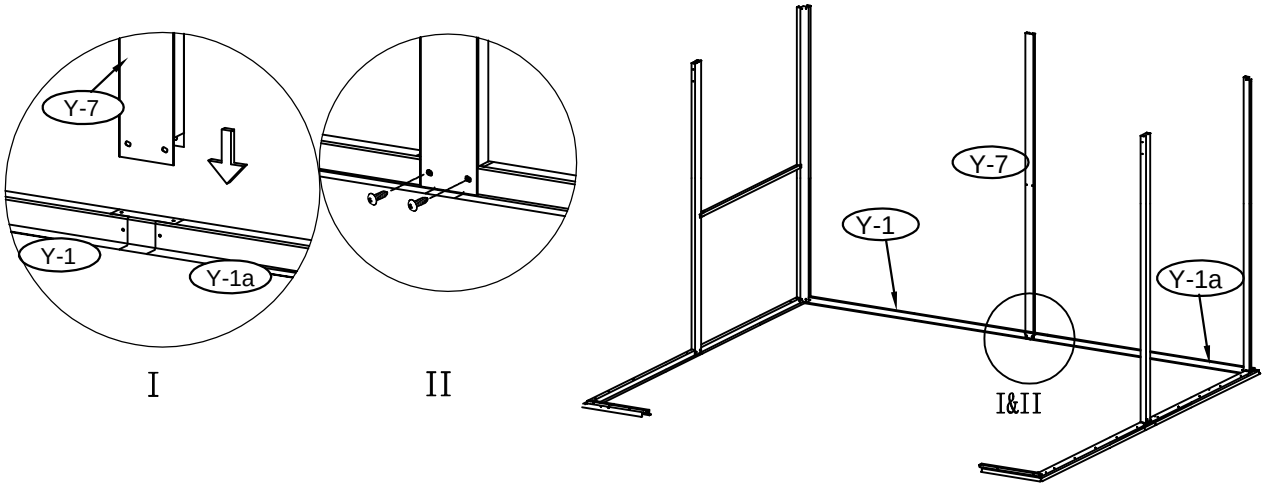
Y-7
Y-1
Y-1a
I
II
Y-7
Y-1
Y-1a
I&II

11

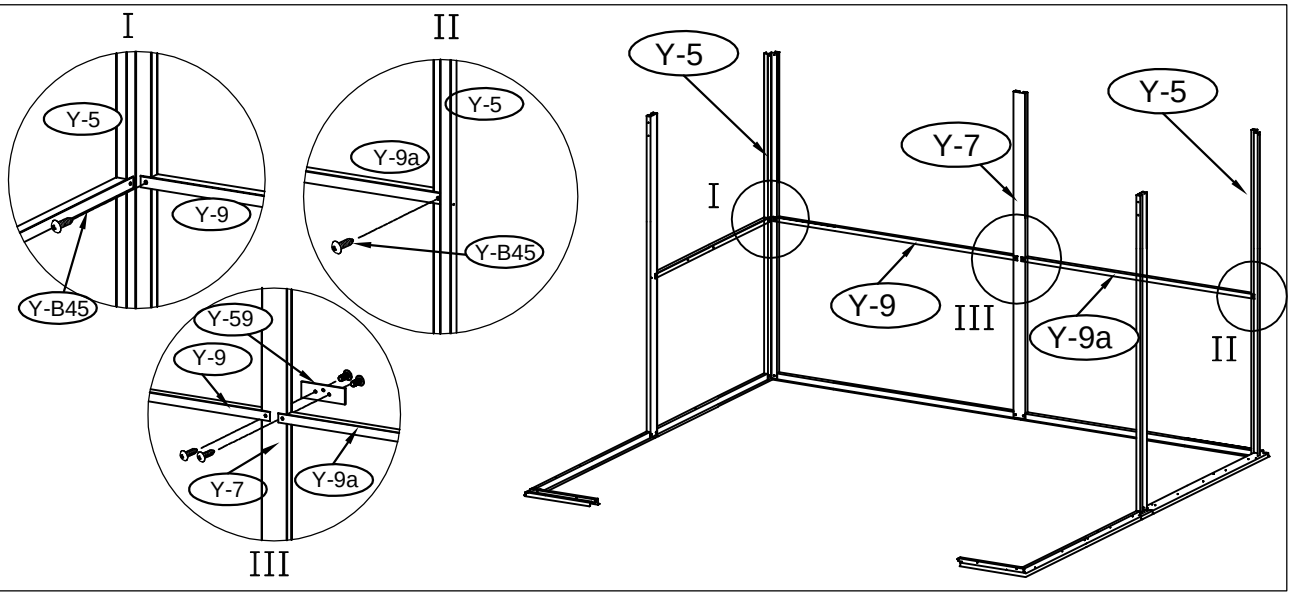
I
II
Y-5
Y-9
Y-B45
Y-5
Y-9a
Y-B45
Y-59
Y-9
Y-7
Y-9a
III
Y-5
Y-5
Y-7
I
Y-9
III
Y-9a
II

12

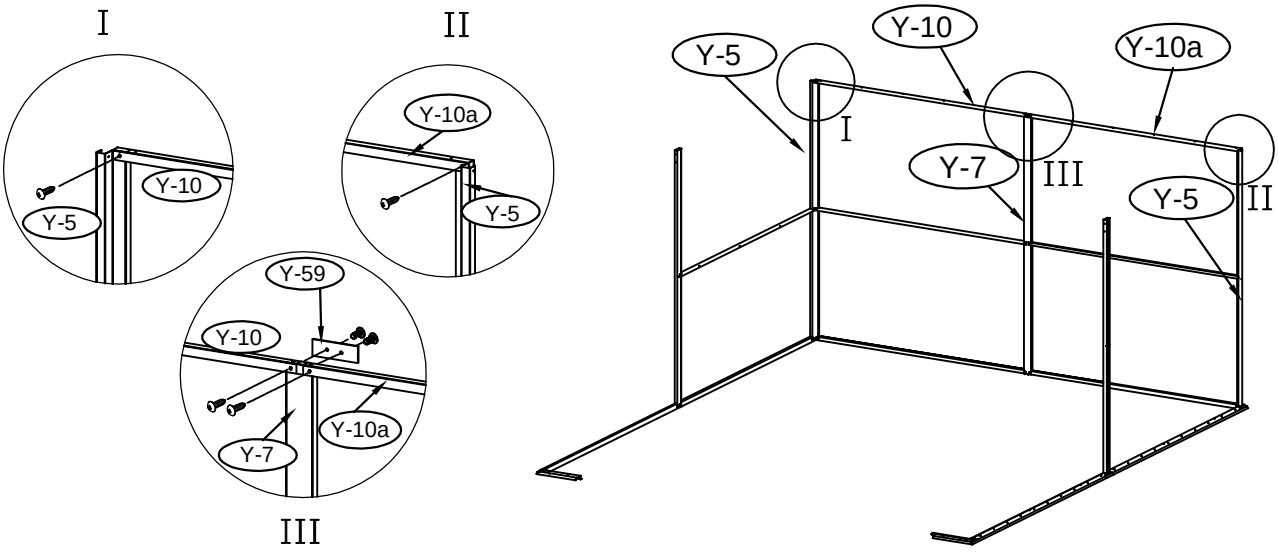
I
II
Y-10
Y-5
Y-10a
Y-5
Y-59
Y-10
Y-7
Y-10a
III
Y-5
Y-10
Y-10a
I
Y-7
III
Y-5
II

13

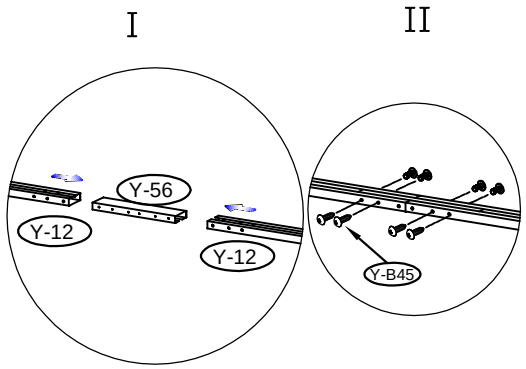

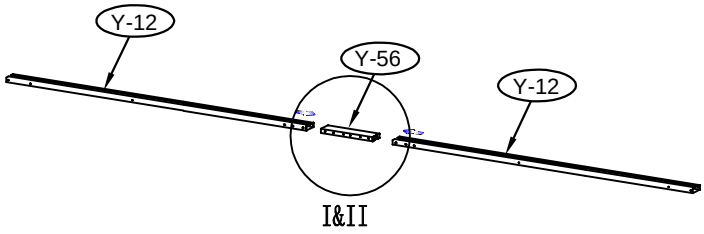

14

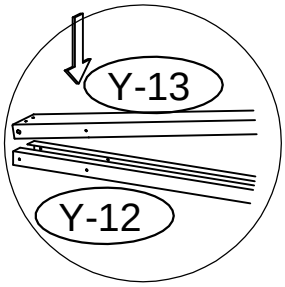

X2

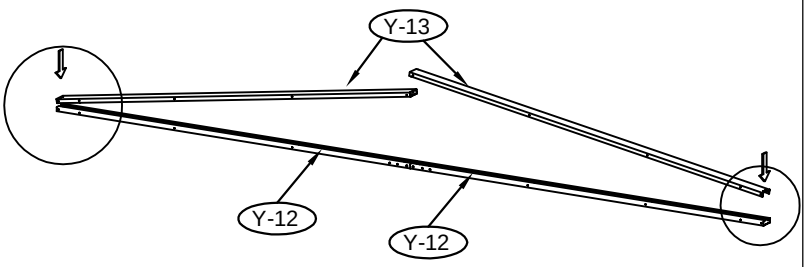

15

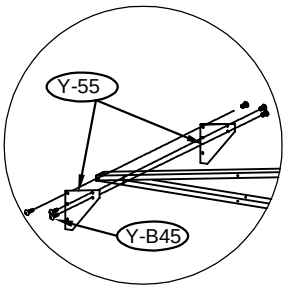

I

X2

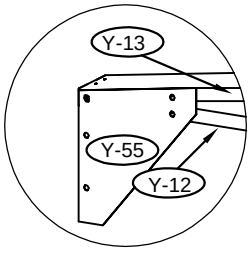

II

X2

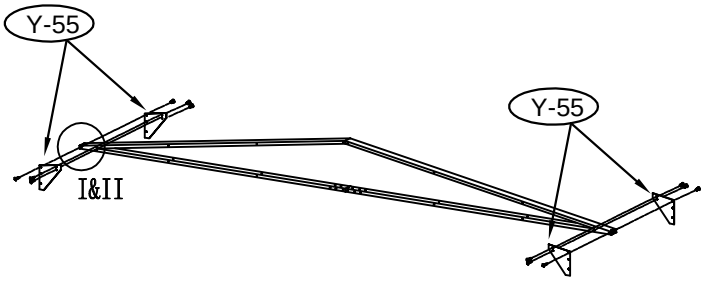

16

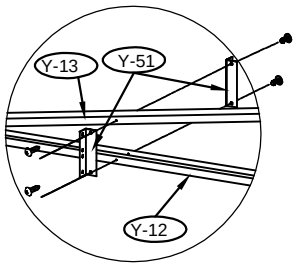

I

X2

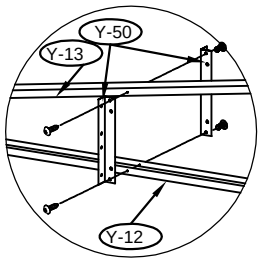

II

X2

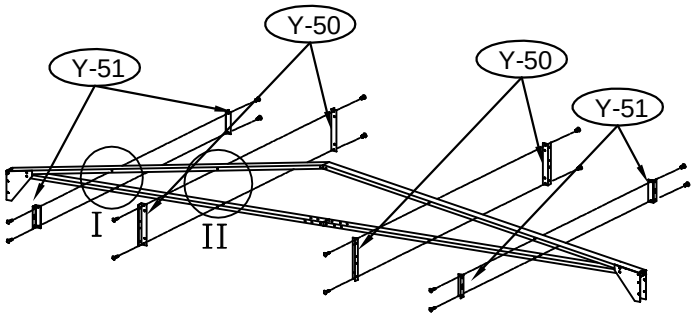

17

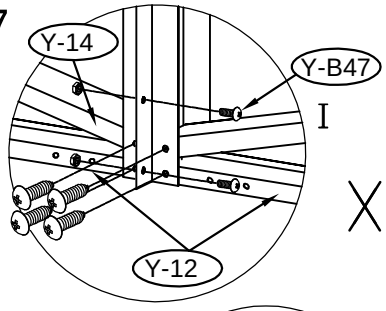

I

X2

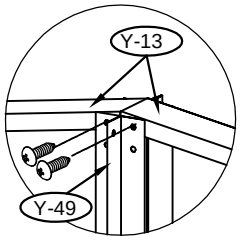

II

X2

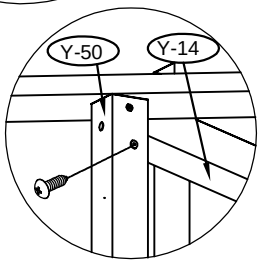

III

X2

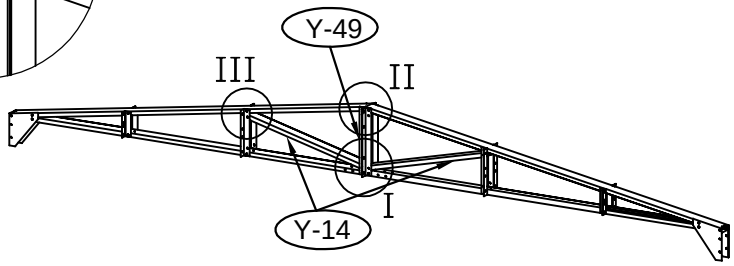

18

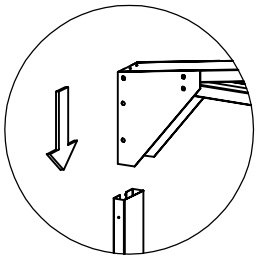

I

X2

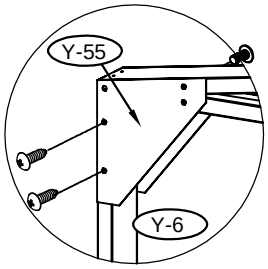

II

X2

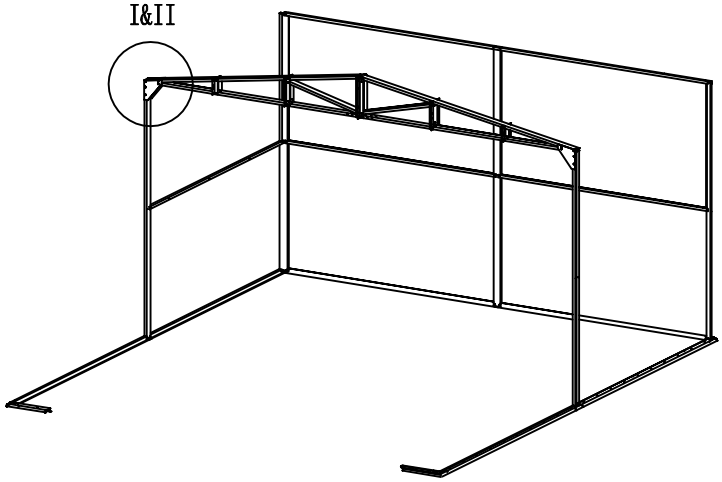

19

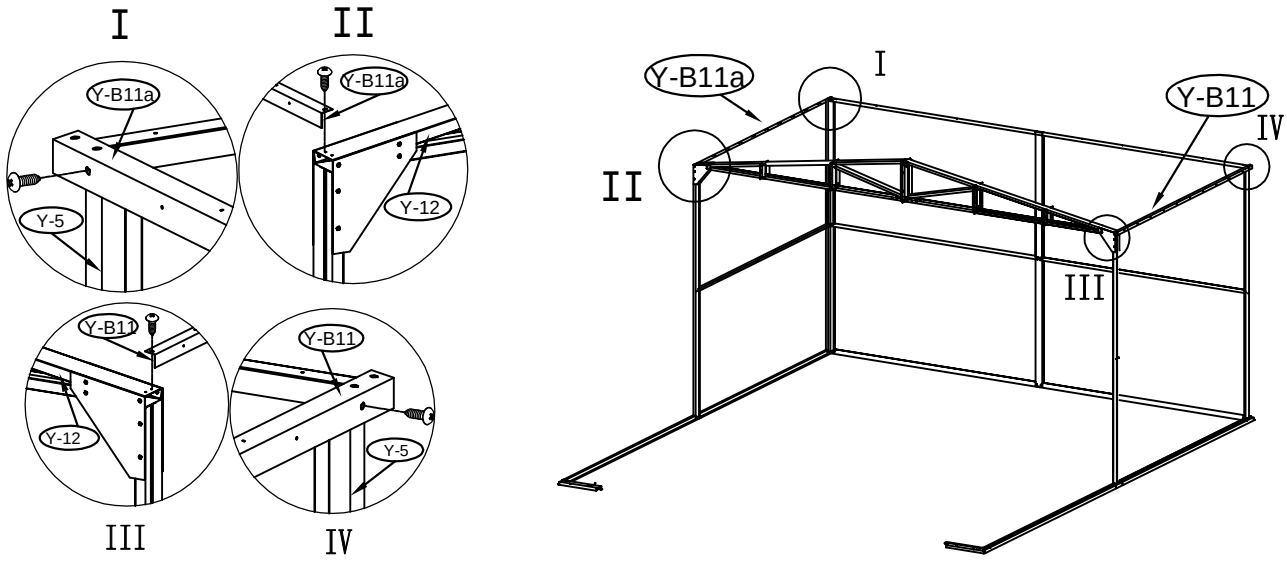
I
II
Y-B11a
Y-B11a
Y-5
Y-12
Y-B11
Y-B11
Y-12
Y-5
III
IV
Y-B11a
I
Y-B11
IV
II
III

20

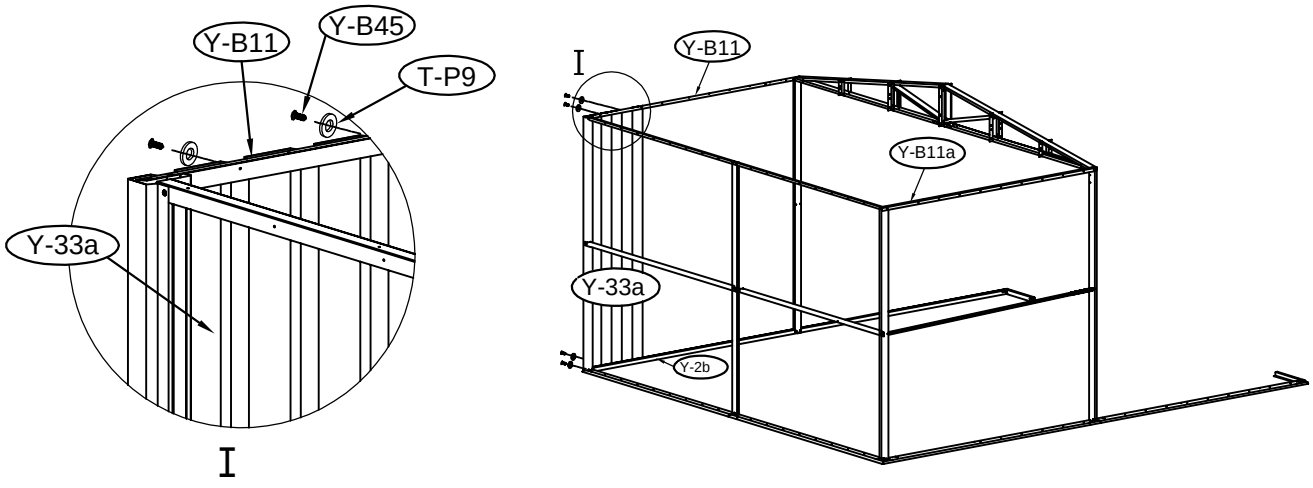
Y-B11
Y-B45
T-P9
Y-33a
I
I
Y-B11
Y-B11a
Y-33a
Y-2b

21

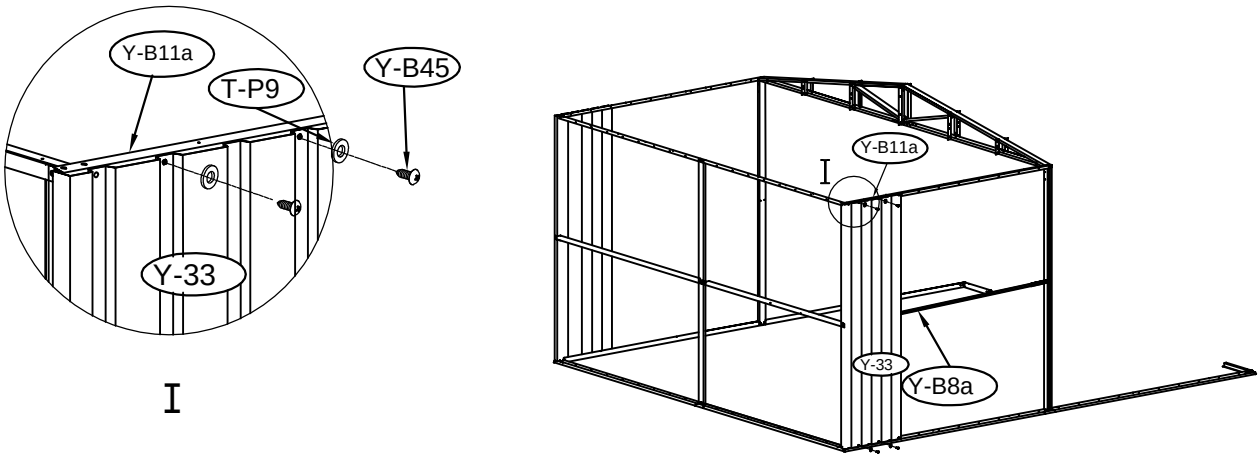
Y-B11a
T-P9
Y-B45
Y-33
I
Y-B11a
I
Y-33
Y-B8a

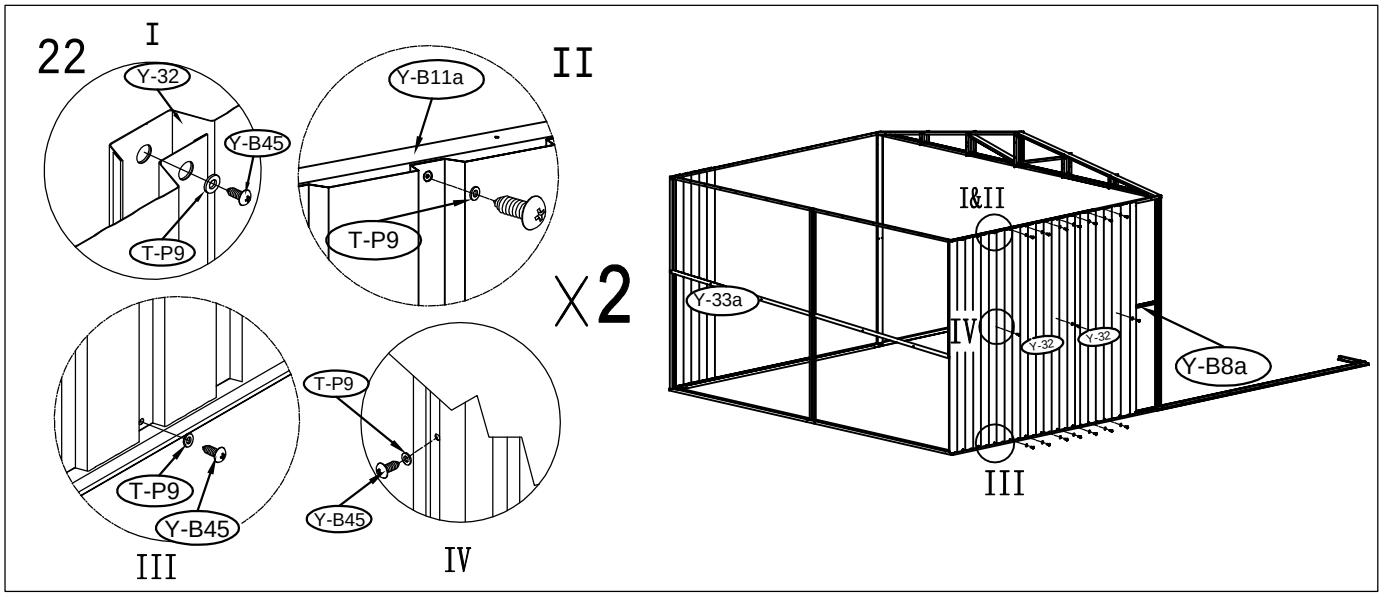
22
I
Y-32
Y-B45
T-P9
II
Y-B11a
T-P9
X2
I&II
Y-33a
IV
Y-32
Y-32
Y-B8a
III
T-P9
T-P9
Y-B45
III
T-P9
Y-B45
IV

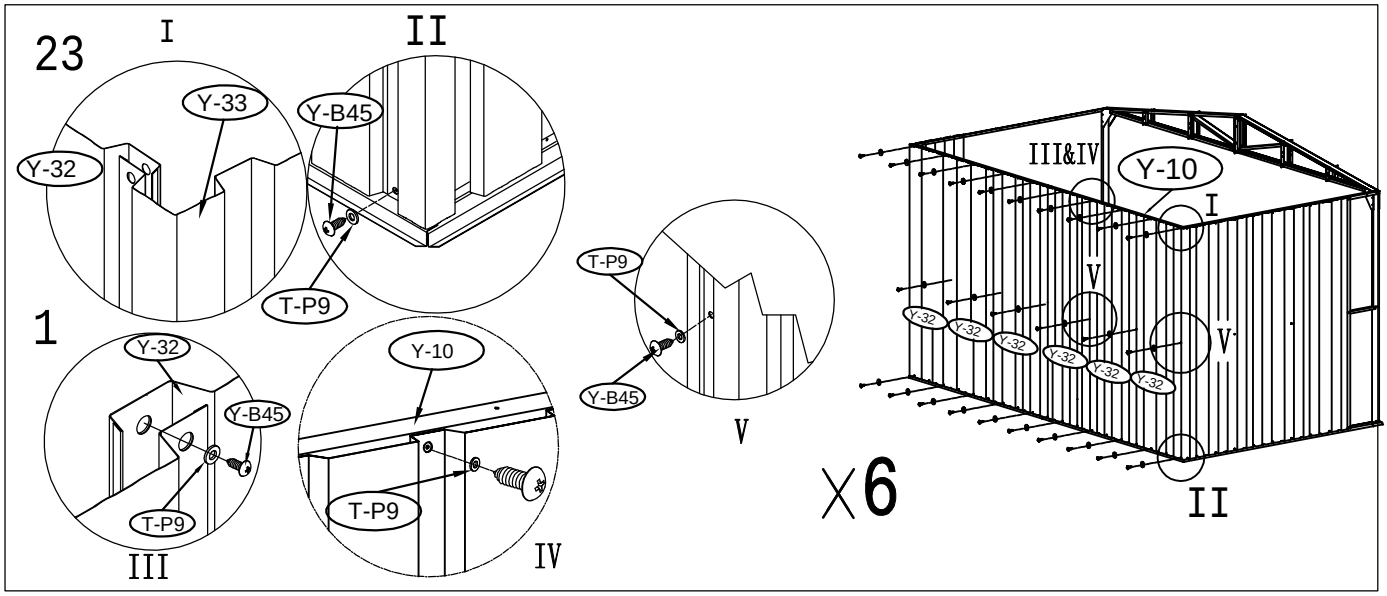
23
I
II
Y-33
Y-32
Y-B45
T-P9
1
Y-32
Y-B45
T-P9
III
Y-10
T-P9
IV
T-P9
Y-B45
V
X6
III&IV
Y-10
I
V
V
Y-32
Y-32
Y-32
Y-32
Y-32
Y-32
II

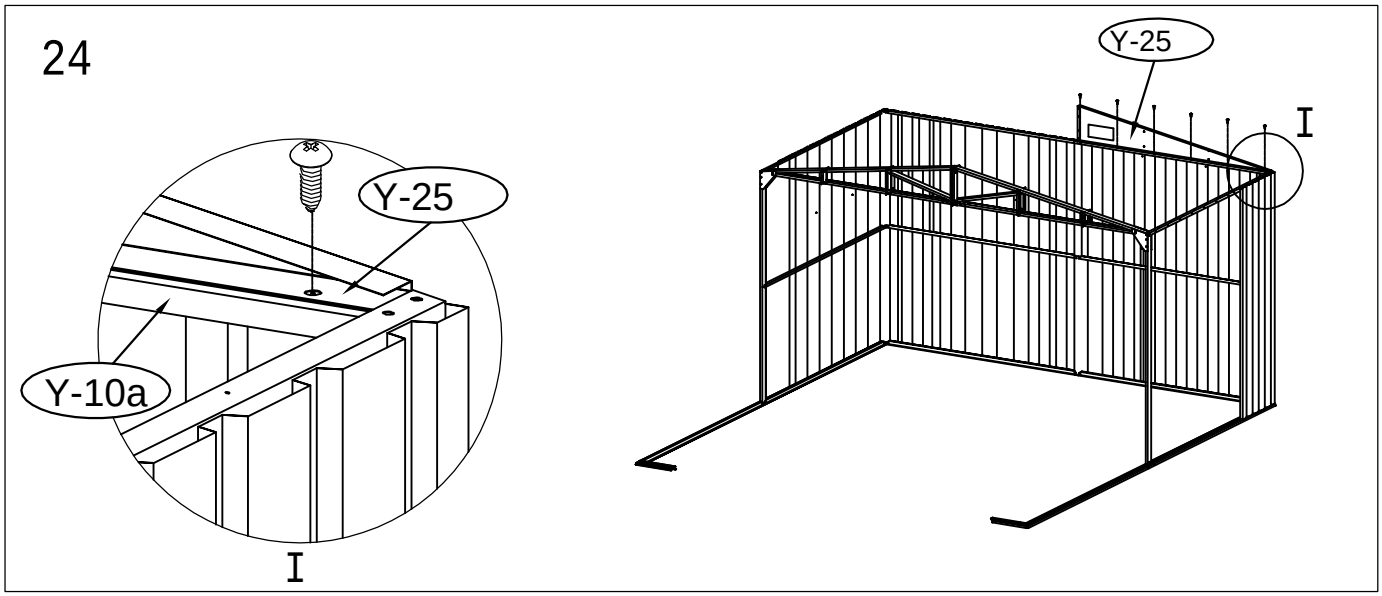
24
Y-25
Y-10a
I
Y-25
I

25

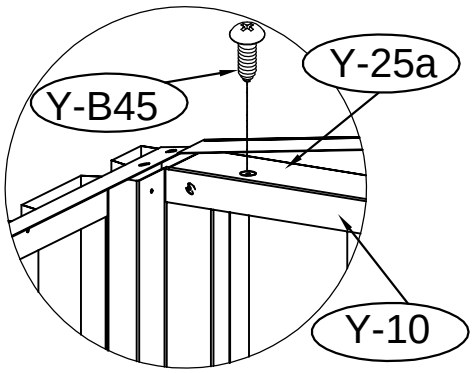
Y-B45
Y-25a
Y-10

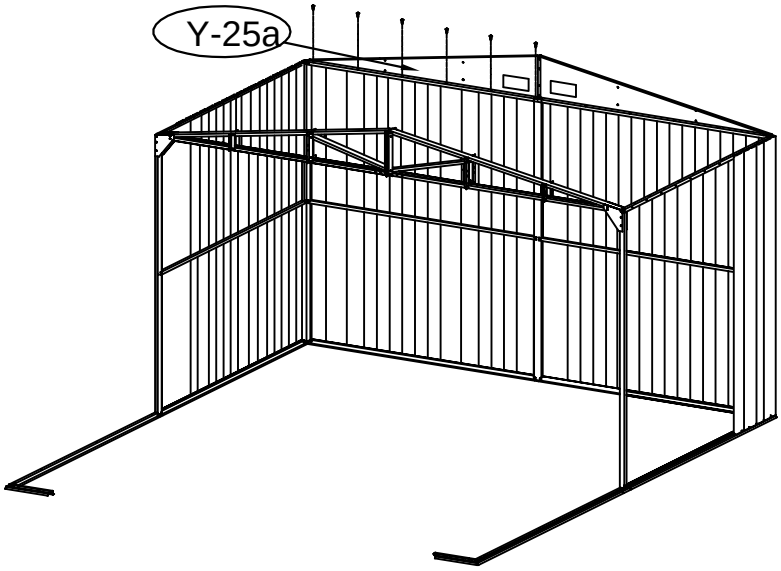
Y-25a

26

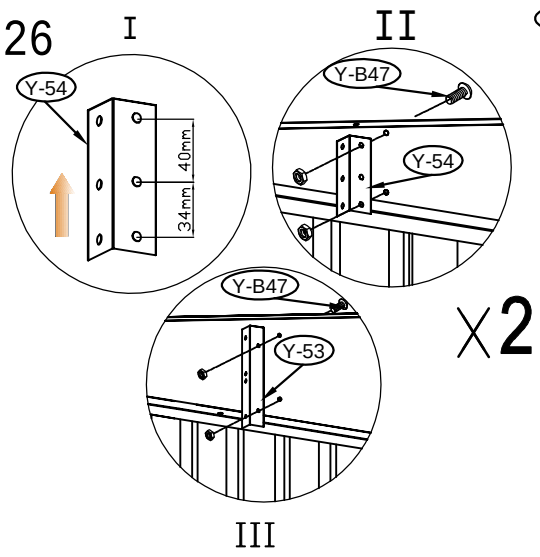
I
Y-54
40mm
34mm
II
Y-B47
Y-54
Y-B47
Y-53
III

X2

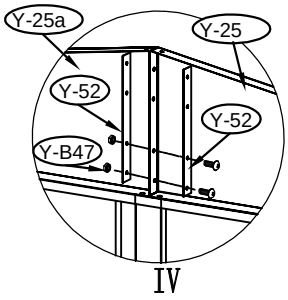
Y-25a
Y-25
Y-52
Y-52
Y-B47
IV

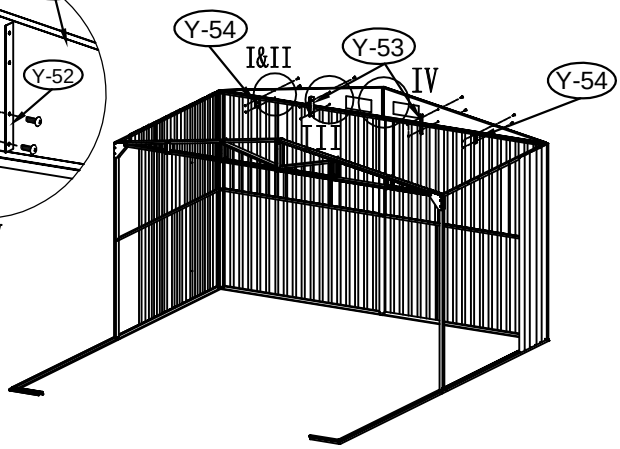
Y-54
I&II
Y-53
IV
Y-54
III

27

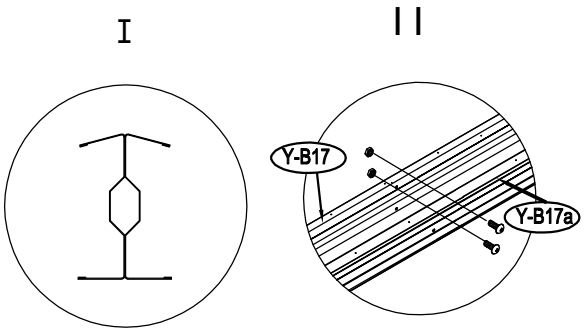
I
II
Y-B17
Y-B17a

X1

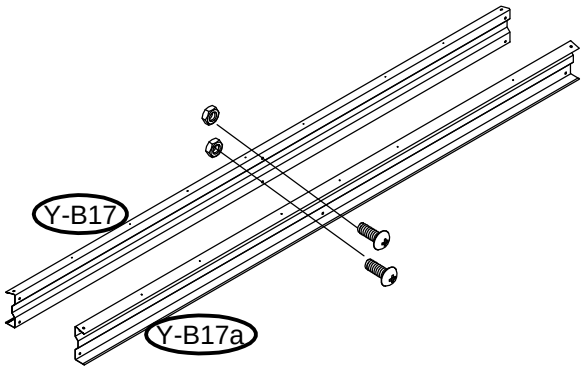
Y-B17
Y-B17a

28

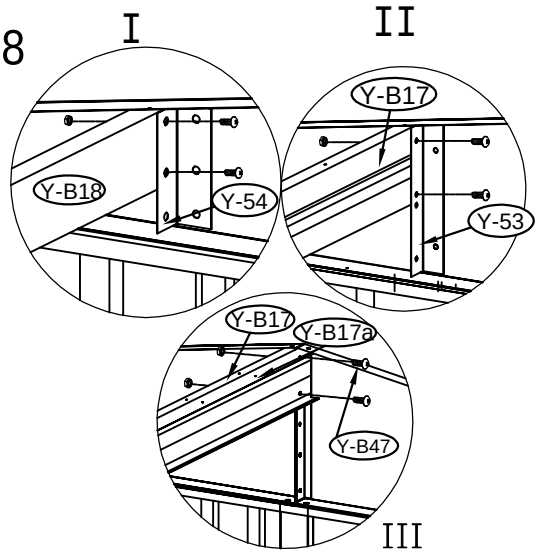
I
II
Y-B18
Y-54
Y-B17
Y-53
Y-B17
Y-B17a
Y-B47
III

X2

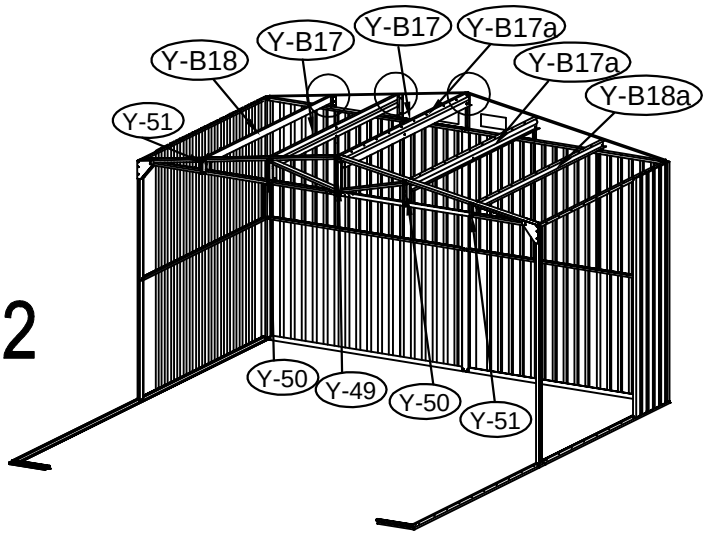
Y-B18
Y-B17
Y-B17
Y-B17a
Y-B17a
Y-B18a
Y-51
Y-50
Y-49
Y-50
Y-51

29

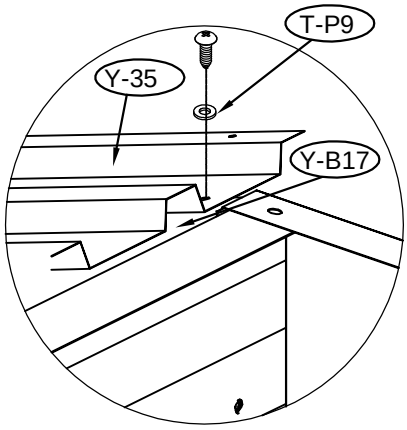
T-P9
Y-35
Y-B17

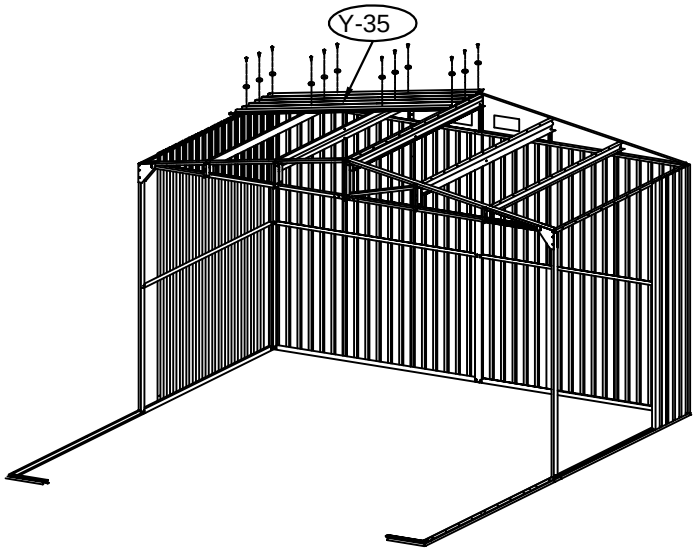
Y-35

30

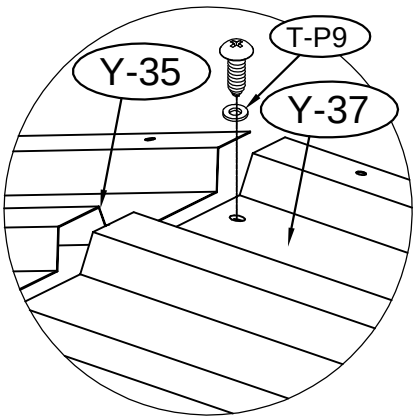
T-P9
Y-35
Y-37

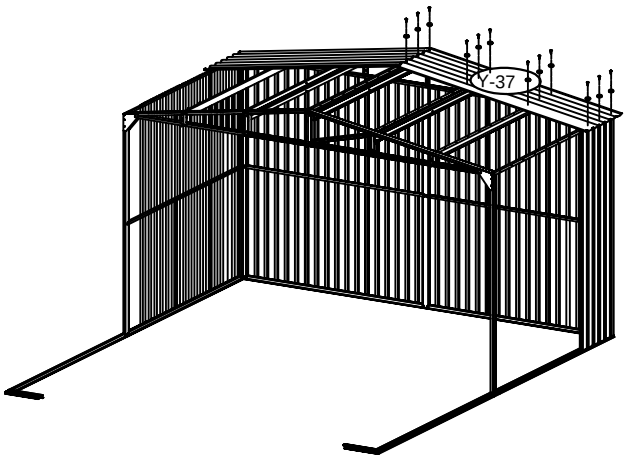
Y-37

31

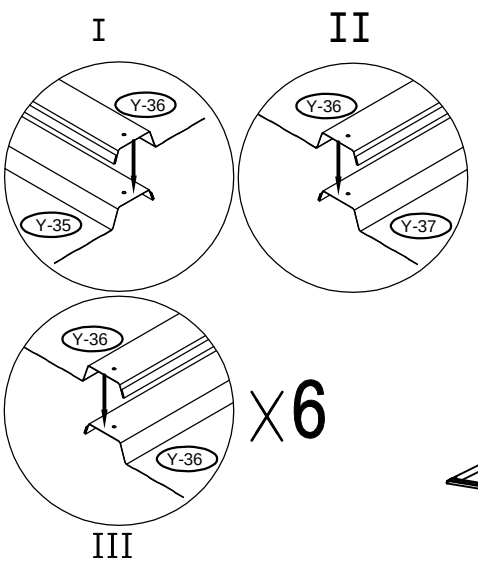
I
II
Y-36
Y-35
Y-37
III
X6

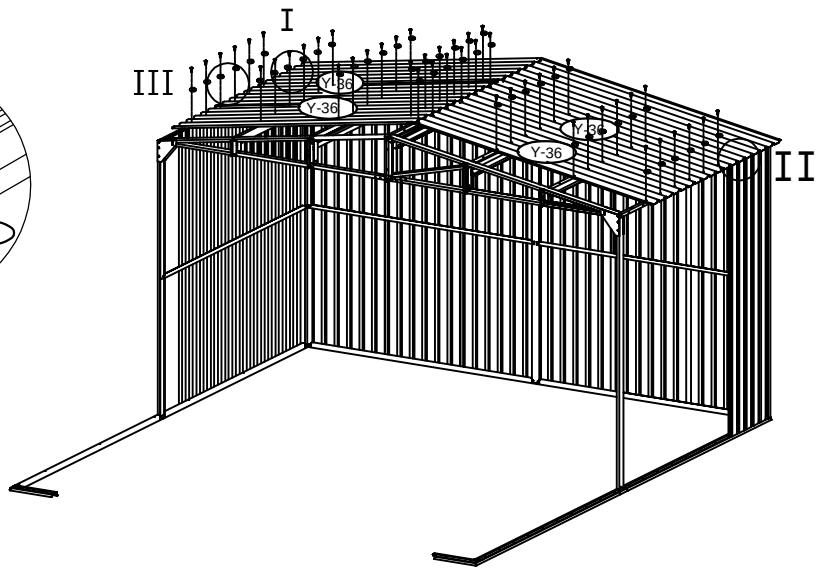
I
III
II

32

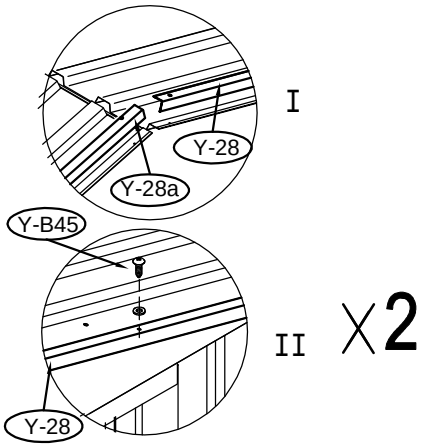
I
Y-28
Y-28a
Y-B45
II
X2

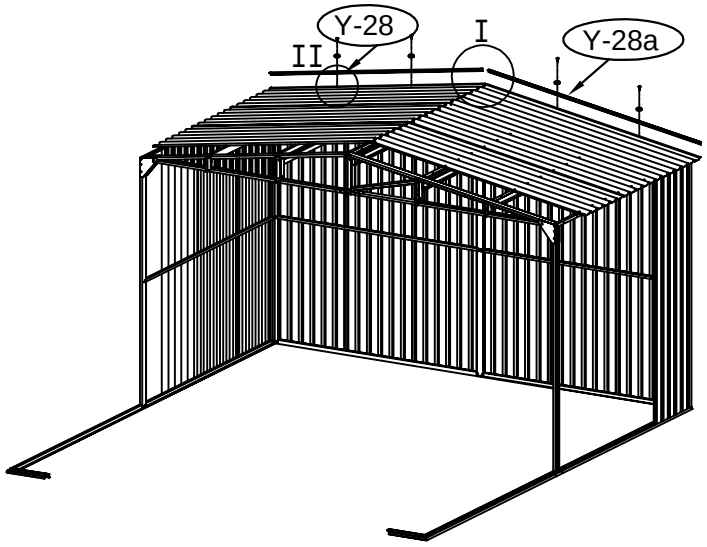
Y-28
II
I
Y-28a

33

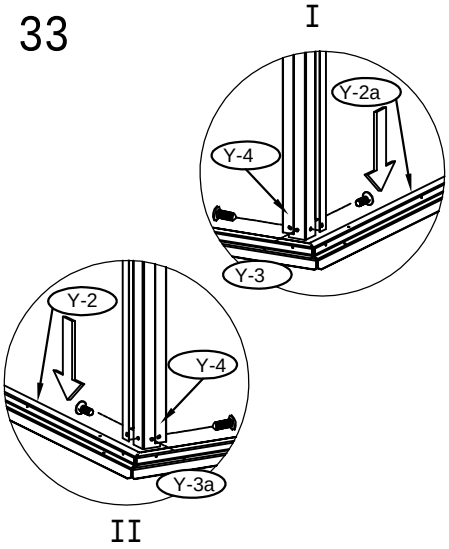
I
Y-2a
Y-4
Y-3
Y-2
Y-4
Y-3a
II

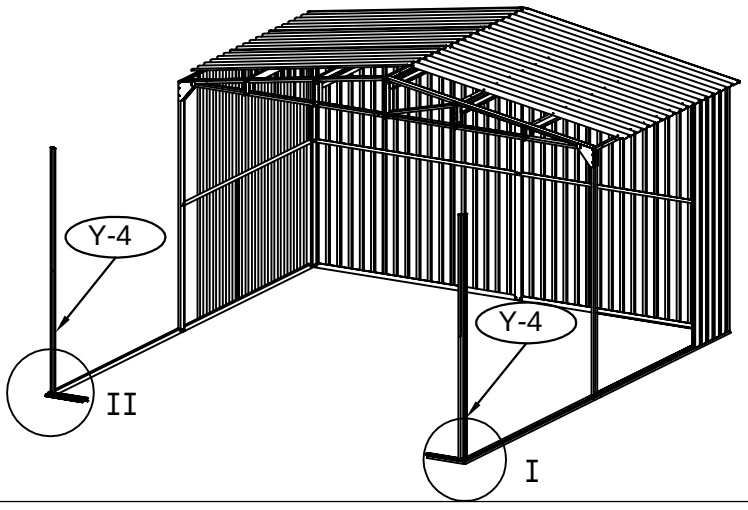
Y-4
Y-4
II
I

34

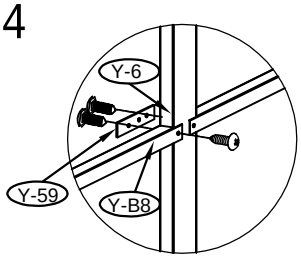

I X2

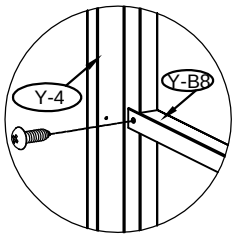

II X2

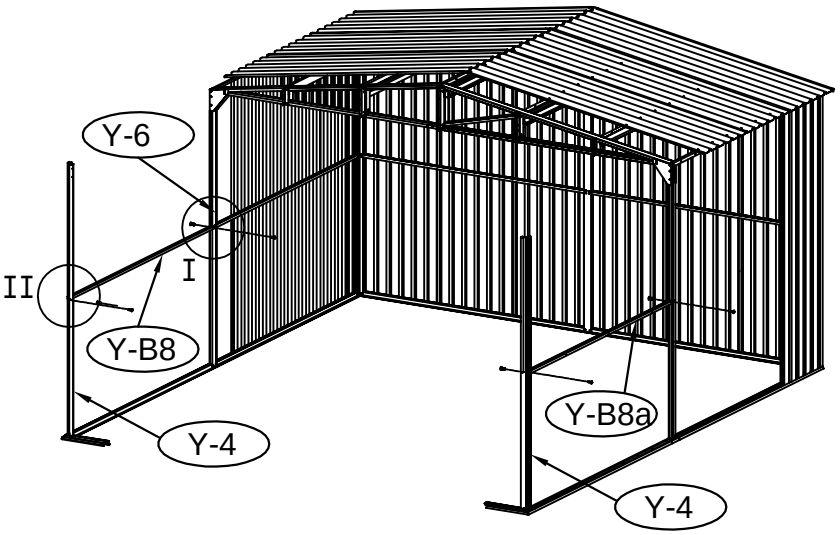

35

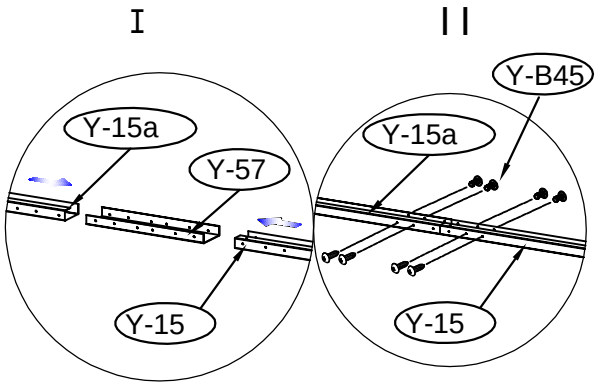

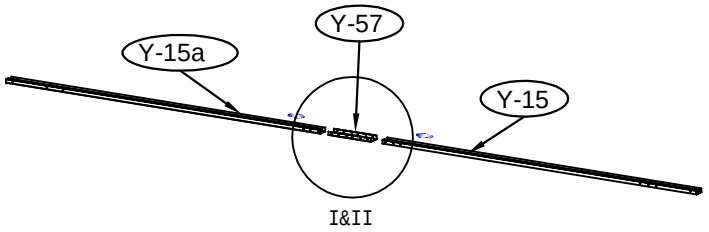

36

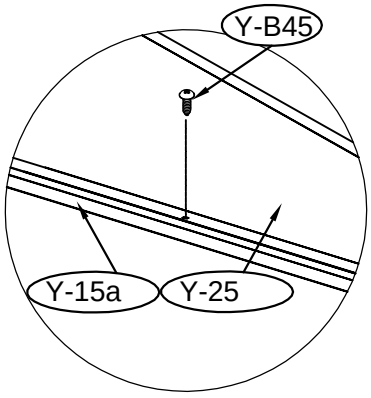

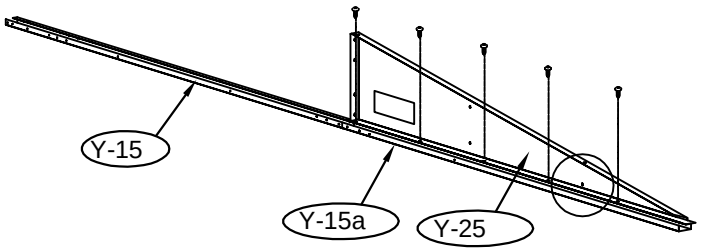

37

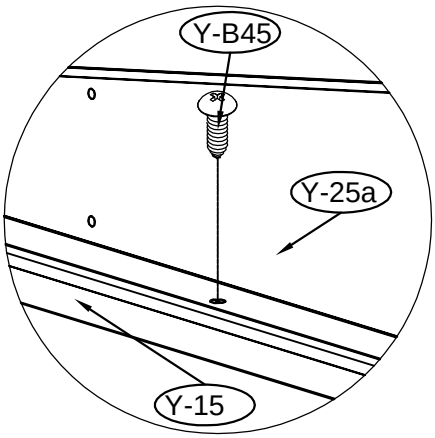

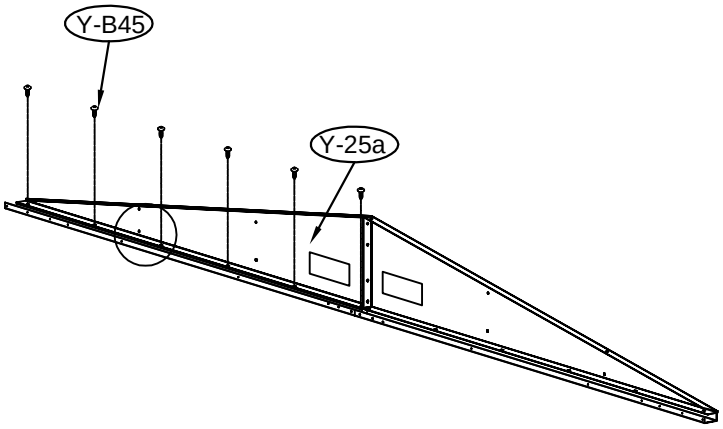

38

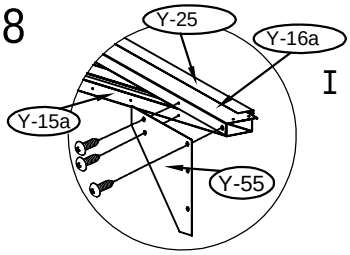

I X2

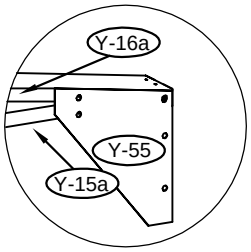

II X2

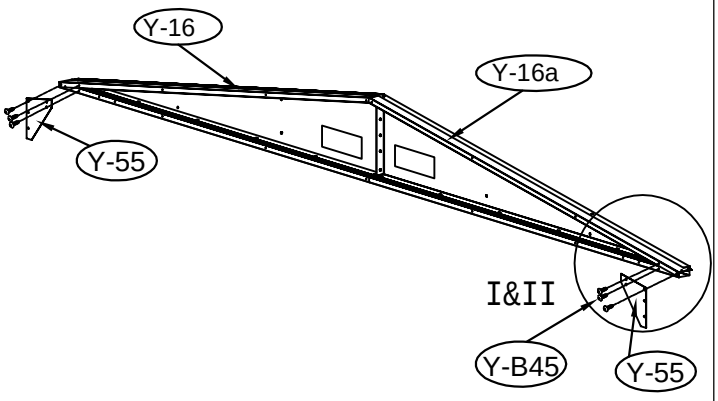

39

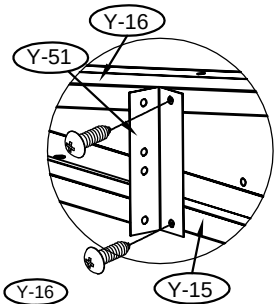

I X2

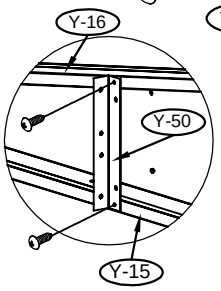

II X2

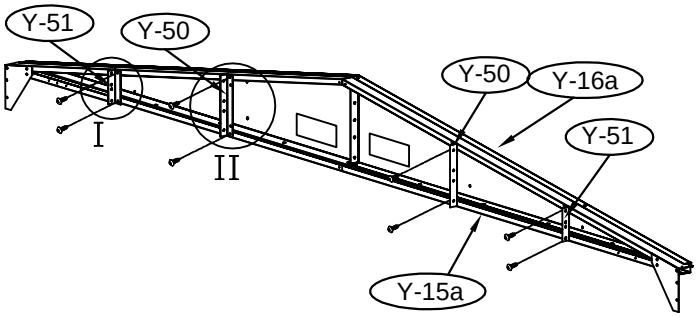

40

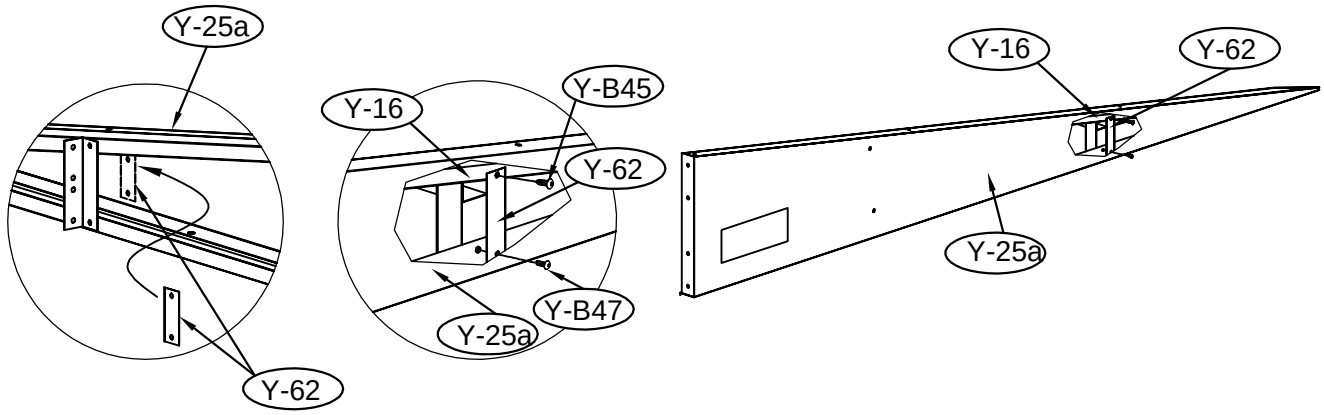
Y-25a
Y-62
Y-16
Y-B45
Y-62
Y-25a
Y-B47
Y-16
Y-62
Y-25a

41

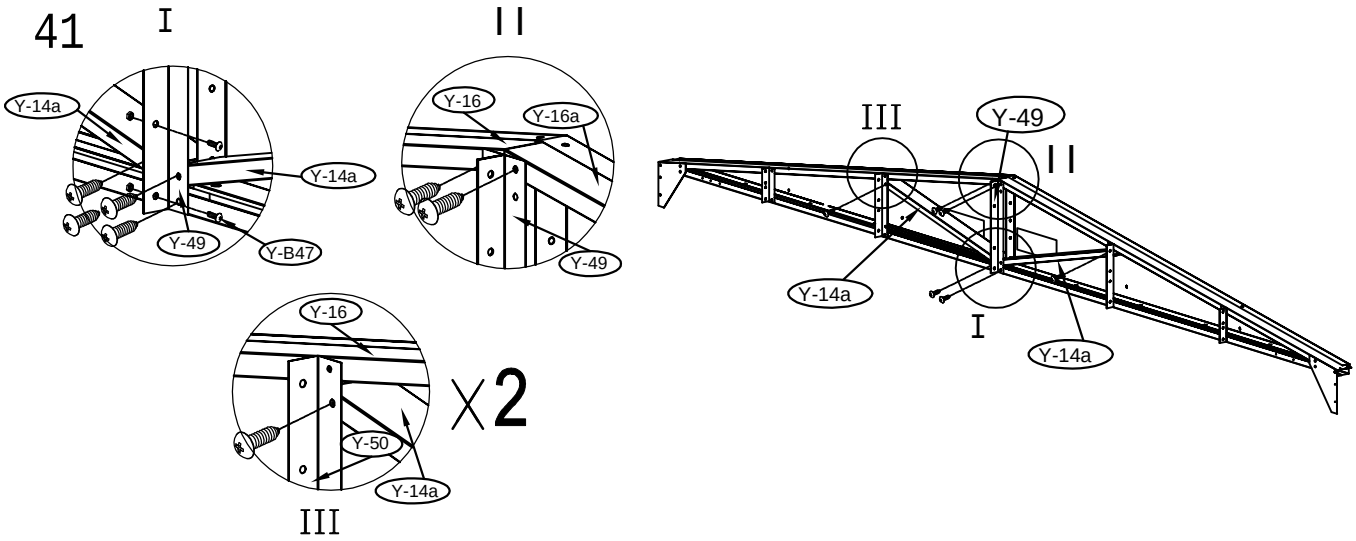
I
II
III
Y-14a
Y-14a
Y-49
Y-B47
Y-16
Y-16a
Y-49
Y-16
X2
Y-50
Y-14a
III
Y-49
II
Y-14a
I
Y-14a

42

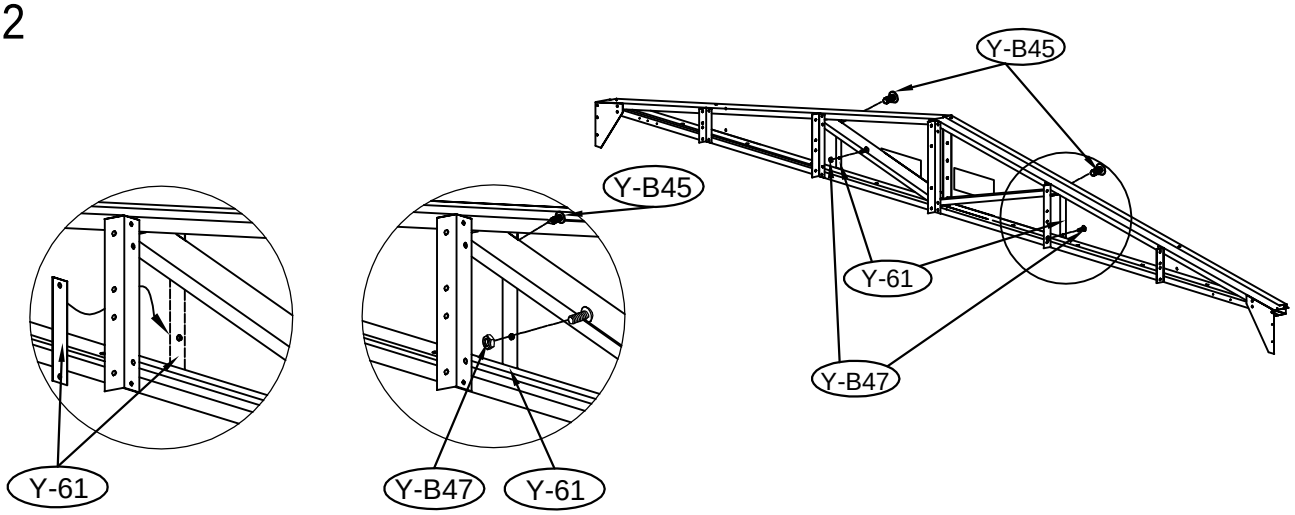
Y-B45
Y-B45
Y-61
Y-B47
Y-61
Y-B47
Y-61

43

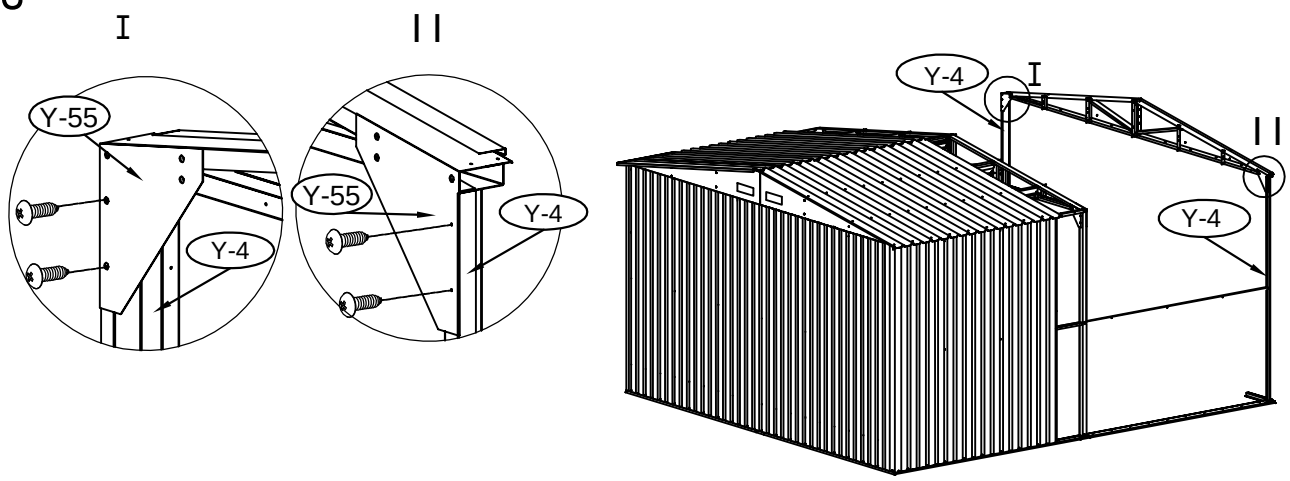
I
II
Y-55
Y-4
Y-55
Y-4
Y-4
I
II
Y-4

44

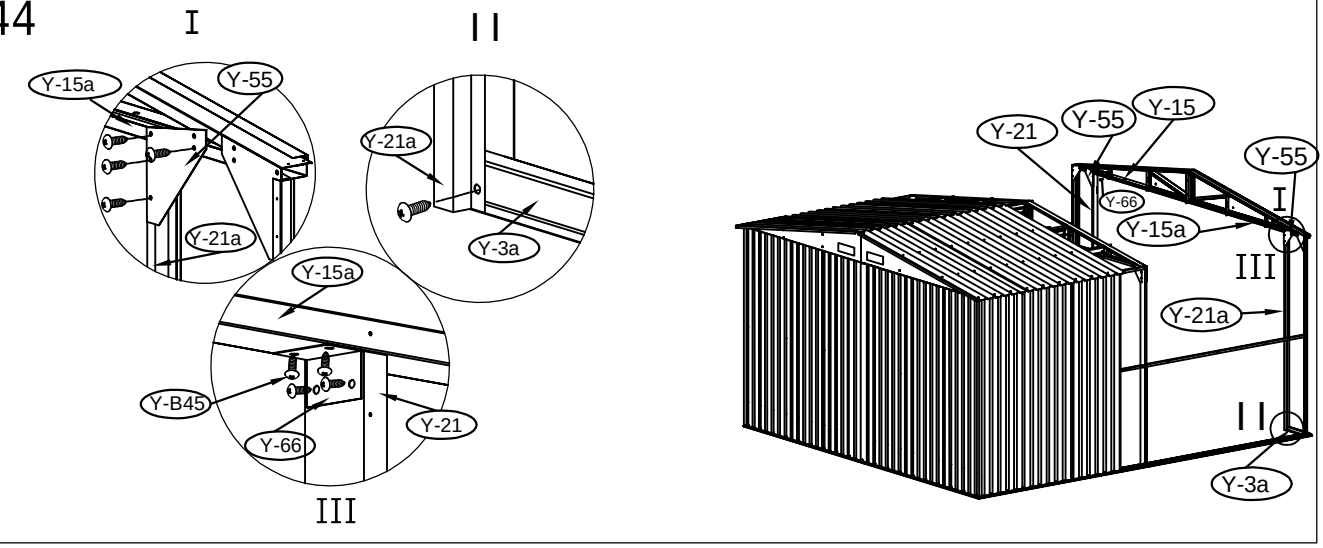
I
II
Y-15a
Y-55
Y-21a
Y-21a
Y-3a
Y-15a
Y-B45
Y-66
Y-21
III
Y-21
Y-55
Y-15
Y-55
Y-66
I
Y-15a
III
Y-21a
II
Y-3a

45

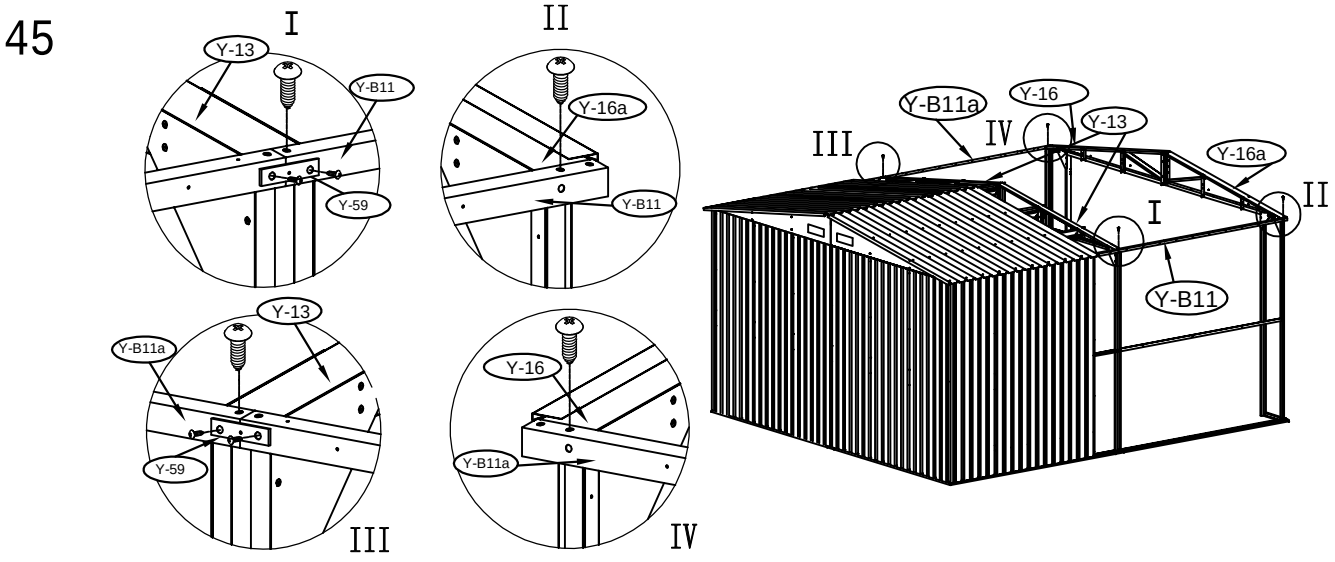
I
II
Y-13
Y-B11
Y-59
Y-16a
Y-B11
Y-13
Y-B11a
Y-59
III
Y-16
Y-B11a
IV
III
Y-B11a
IV
Y-16
Y-13
Y-16a
II
I
Y-B11

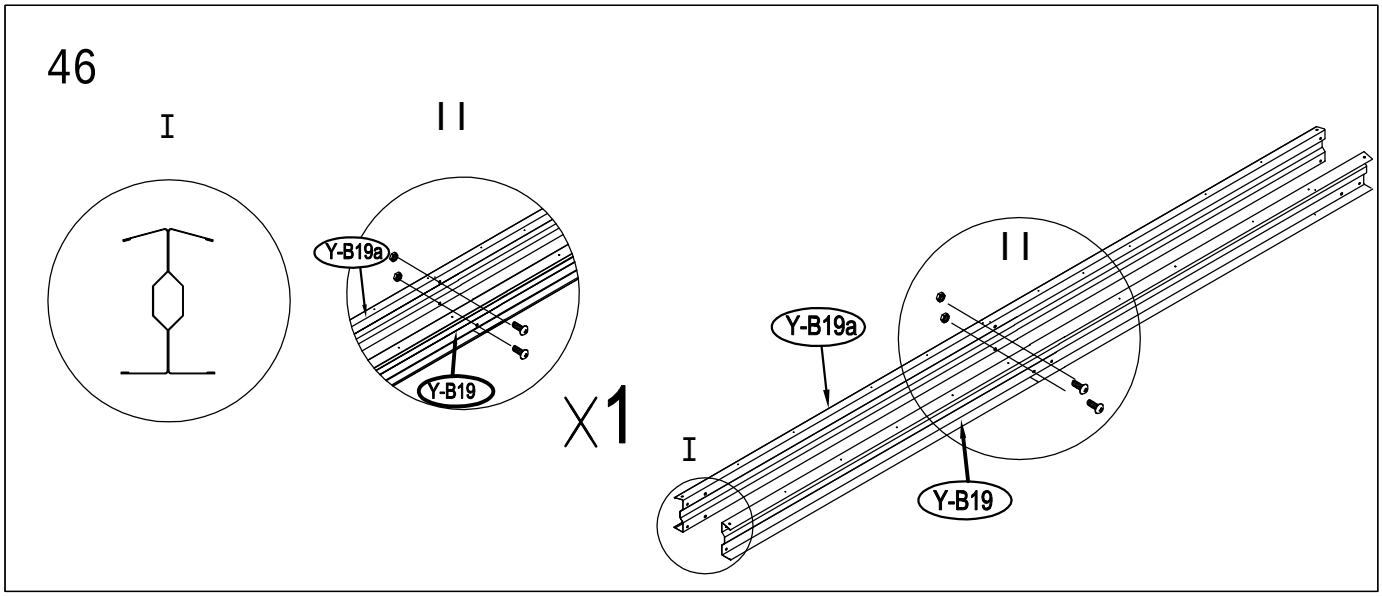
46
I
II
Y-B19a
Y-B19
X1
I
II
Y-B19a
Y-B19

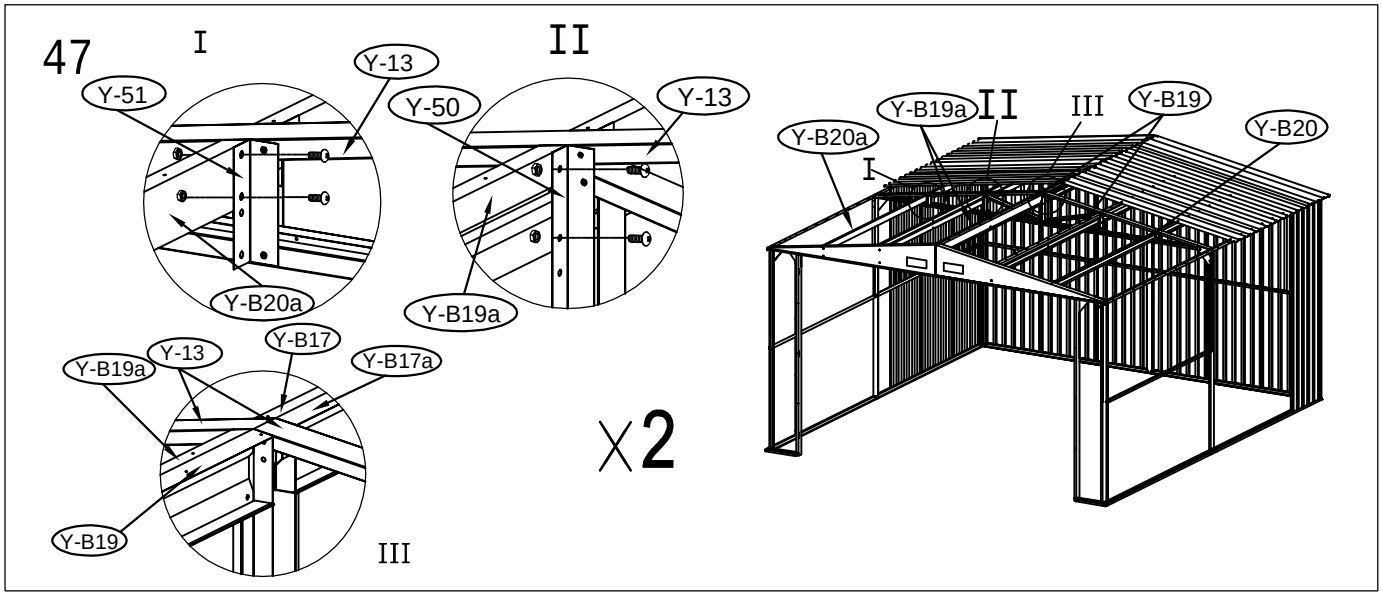
47
I
II
Y-51
Y-13
Y-50
Y-13
Y-B20a
Y-B19a
Y-B19a
Y-13
Y-B17
Y-B17a
Y-B19
III
X2
II
III
Y-B19a
Y-B19
Y-B20a
Y-B20
I

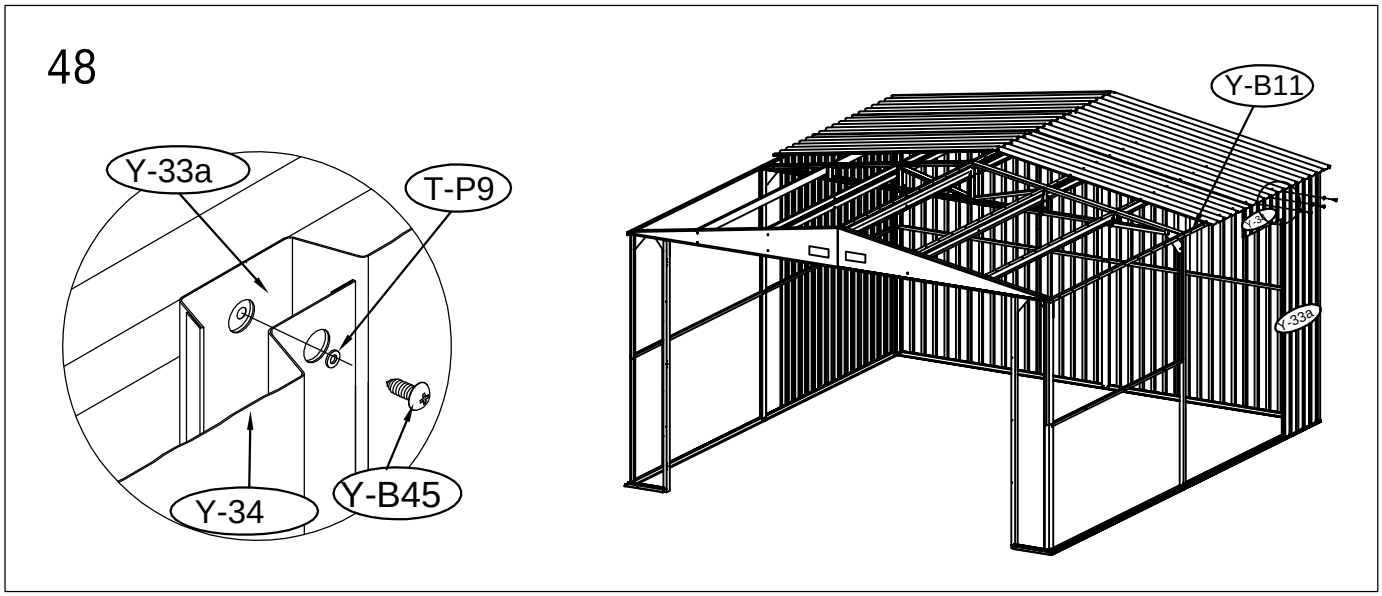
48
Y-33a
T-P9
Y-34
Y-B45
Y-B11
Y-33a

49

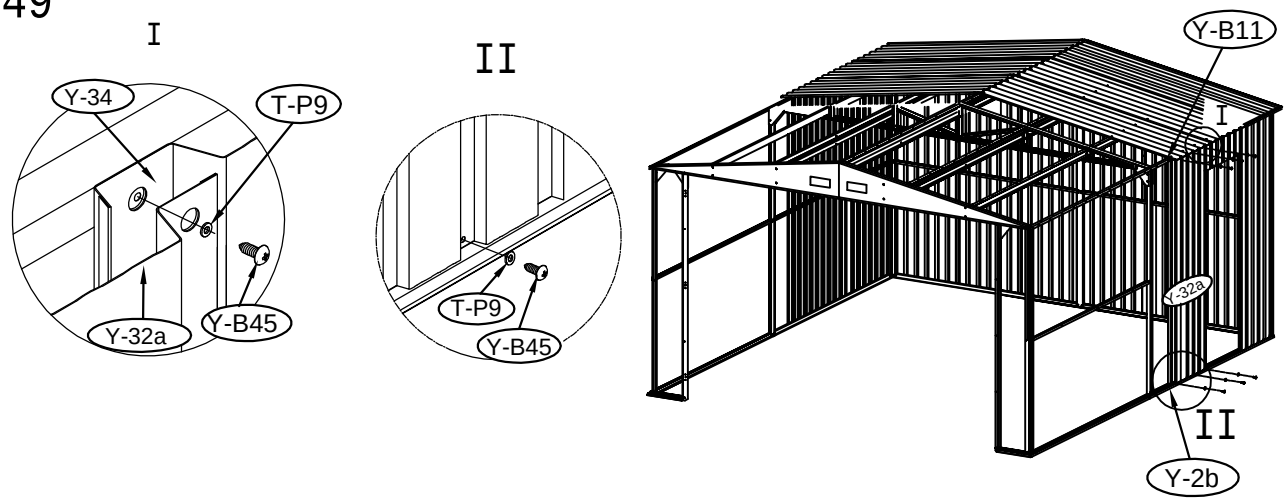
I
II
Y-34
T-P9
Y-32a
Y-B45
T-P9
Y-B45
Y-B11
I
Y-32a
II
Y-2b

50

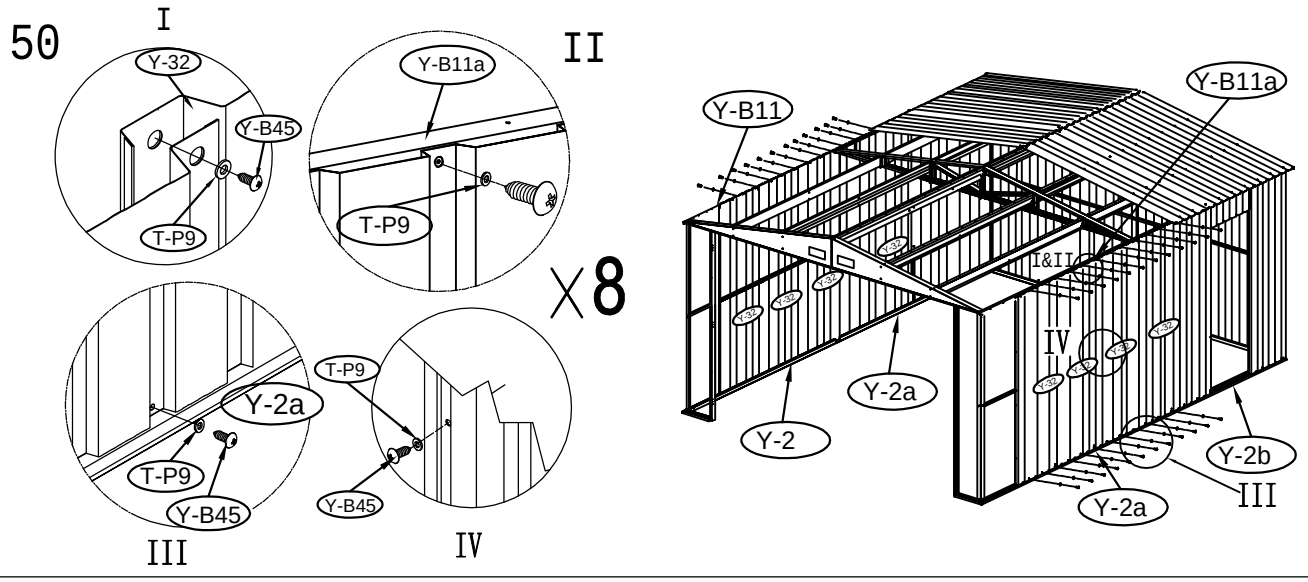
I
Y-32
Y-B45
T-P9
II
Y-B11a
T-P9
X8
Y-2a
T-P9
Y-B45
III
T-P9
Y-B45
IV
Y-B11
Y-B11a
I&II
IV
Y-2
Y-2a
Y-2b
Y-2a
III

51

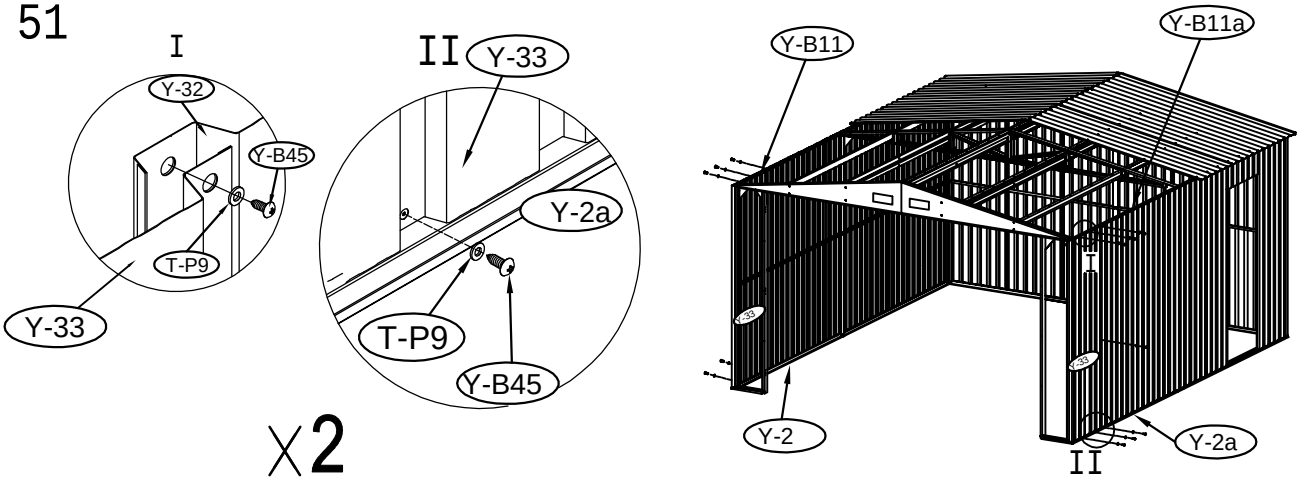
I
Y-32
Y-B45
T-P9
Y-33
II
Y-33
Y-2a
T-P9
Y-B45
X2
Y-B11
Y-B11a
I
Y-2
Y-2a
II

52

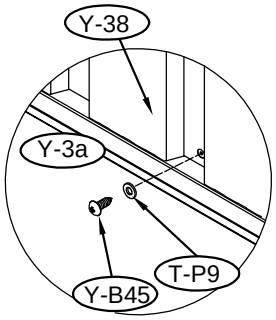
Y-38
Y-3a
T-P9
Y-B45

X2

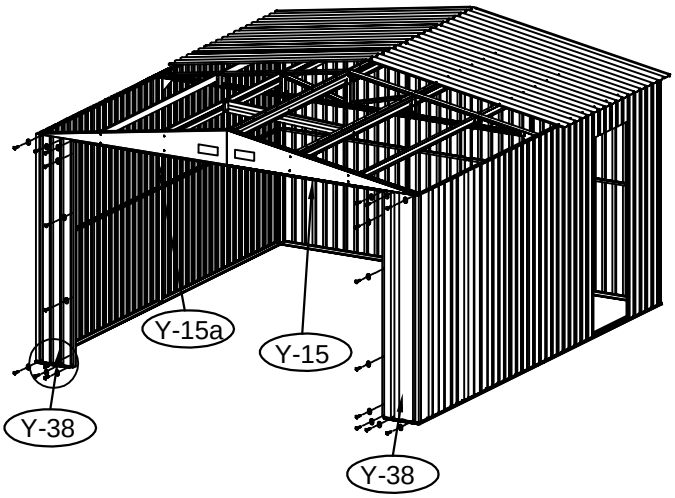
Y-15a
Y-15
Y-38
Y-38

53

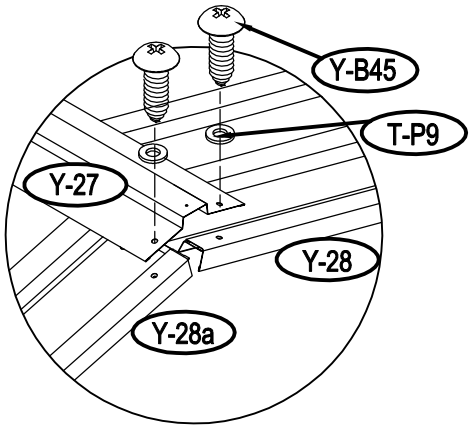
Y-B45
T-P9
Y-27
Y-28
Y-28a

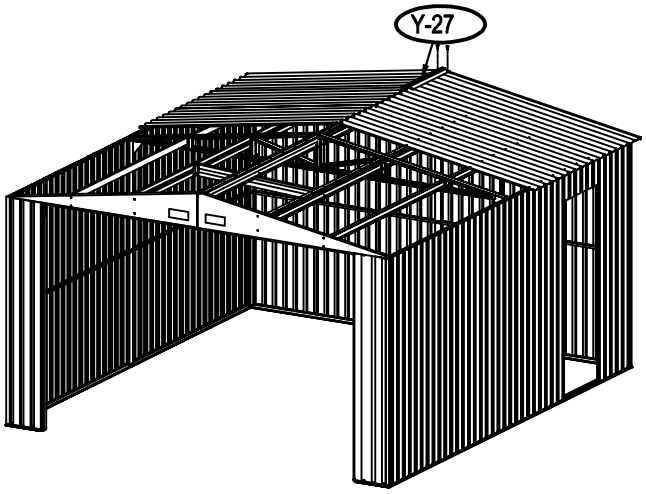
Y-27

54

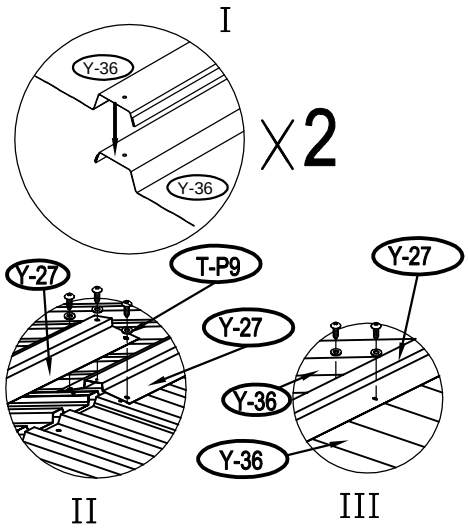
I
Y-36
Y-36
T-P9
Y-27
Y-27
Y-27
Y-36
Y-36
II
III

X2

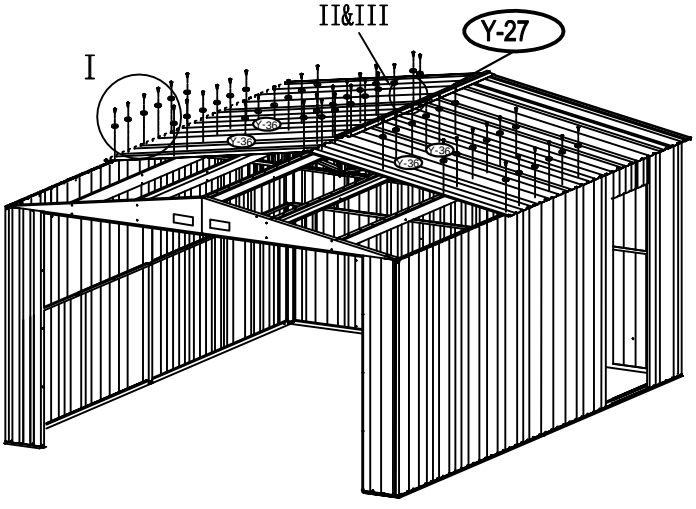
II&III
Y-27
I

55

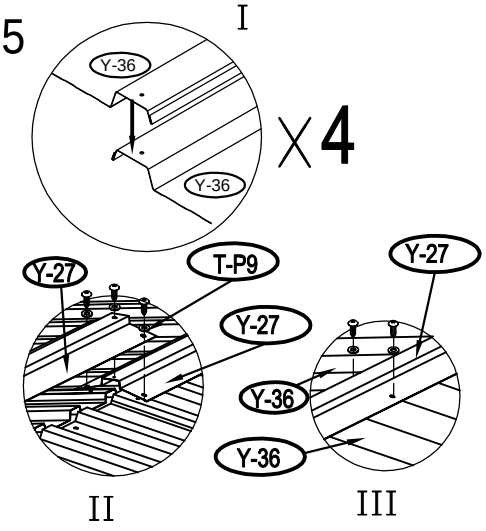

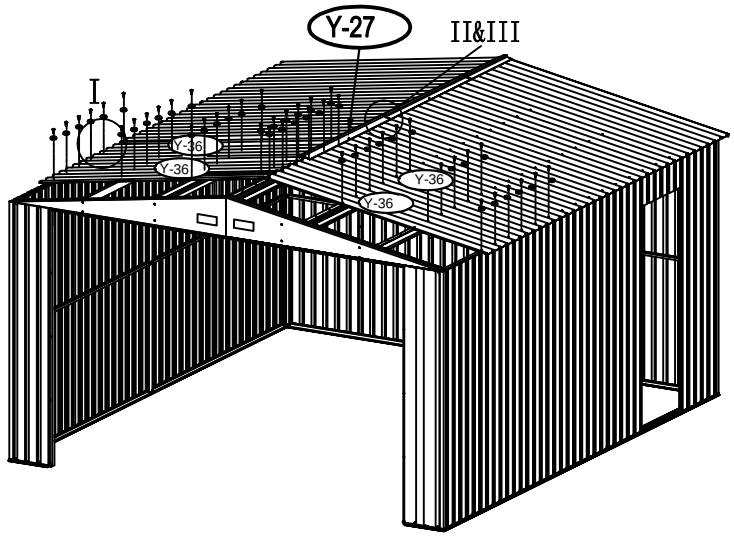

56

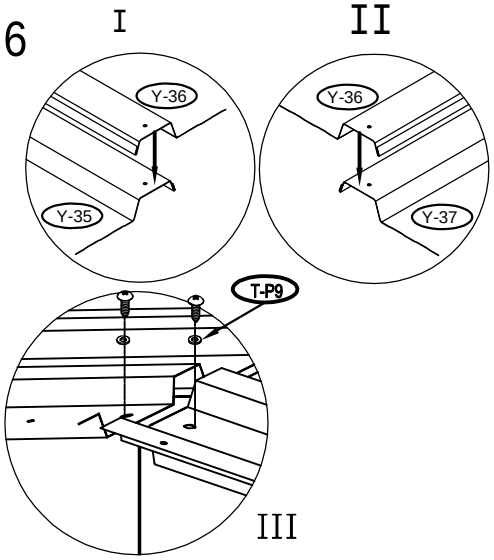

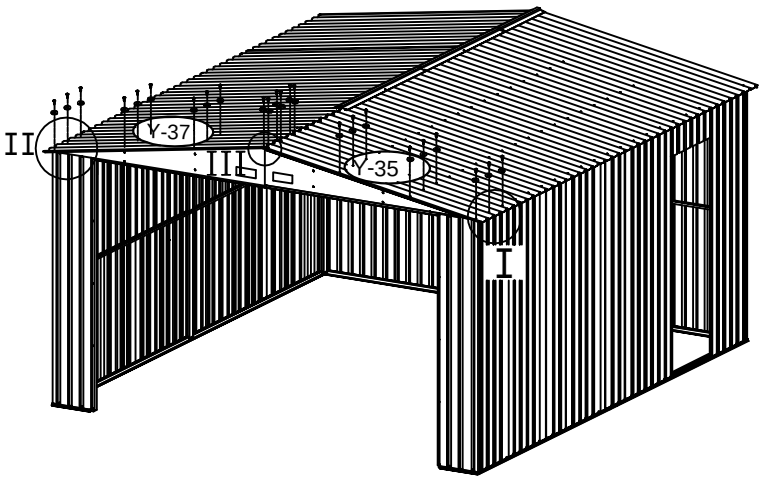

57

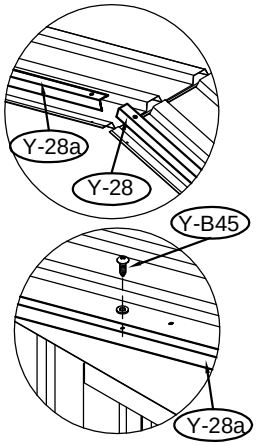

I

II X2

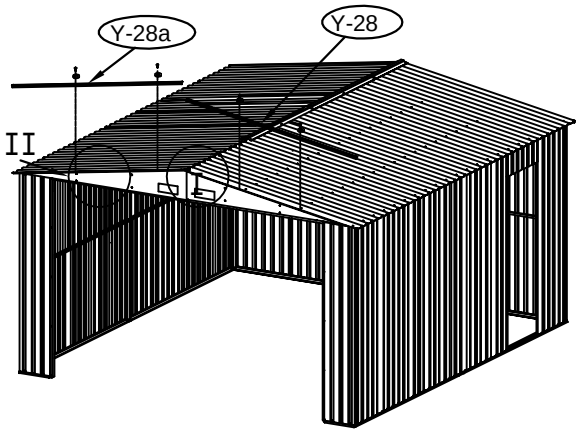

58

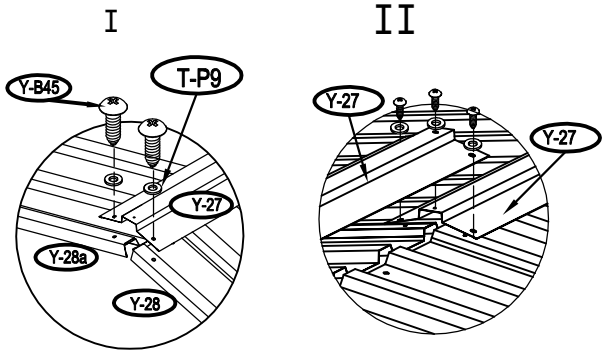
I
II
Y-B45
T-P9
Y-27
Y-28a
Y-28
Y-27
Y-27

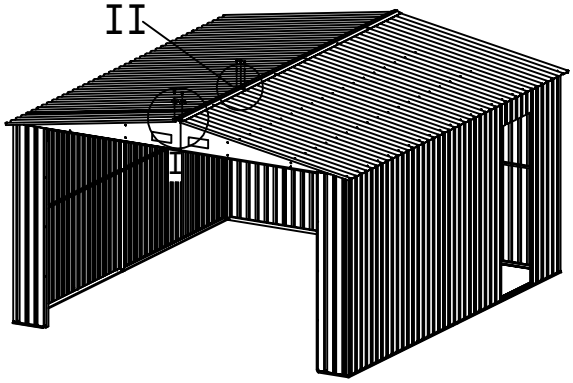
II

59

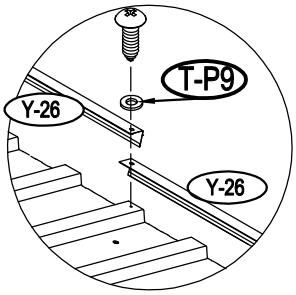
T-P9
Y-26
Y-26

X6

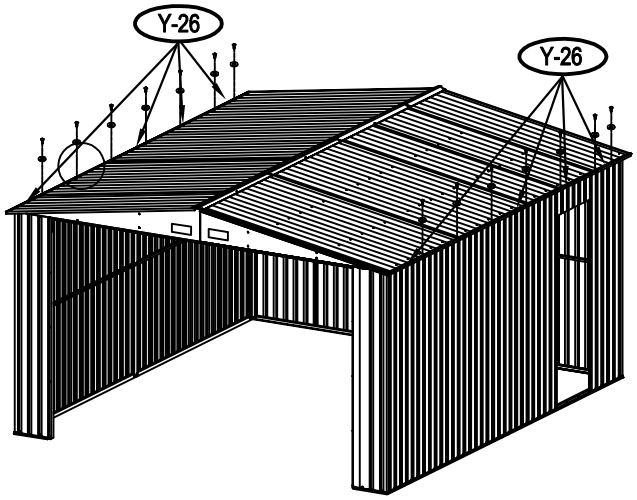
Y-26
Y-26

60

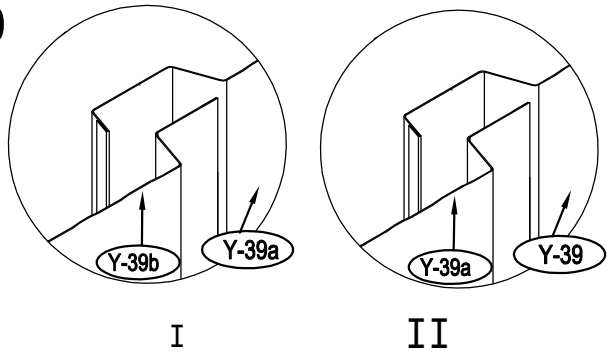
Y-39b
Y-39a
Y-39a
Y-39
I
II

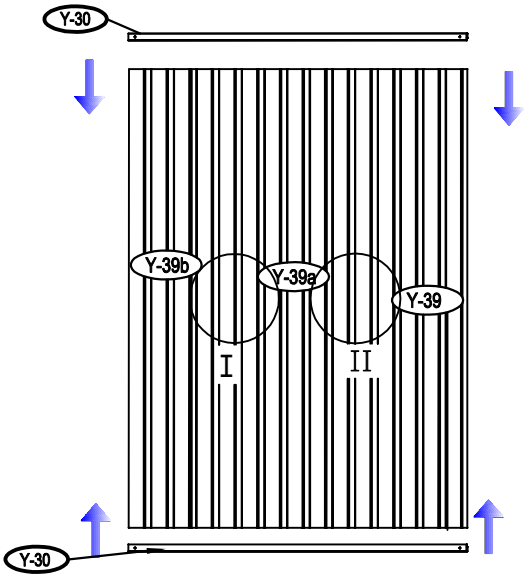
Y-30
Y-39b
Y-39a
Y-39
I
II
Y-30

61

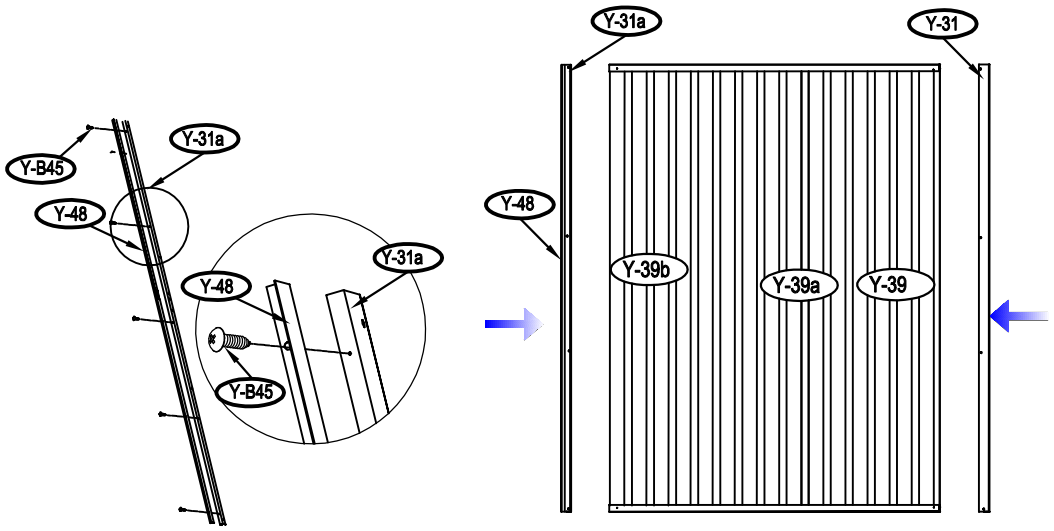
Y-31a
Y-31
Y-B45
Y-48
Y-31a
Y-48
Y-31a
Y-48
Y-39b
Y-39a
Y-39
Y-B45

62

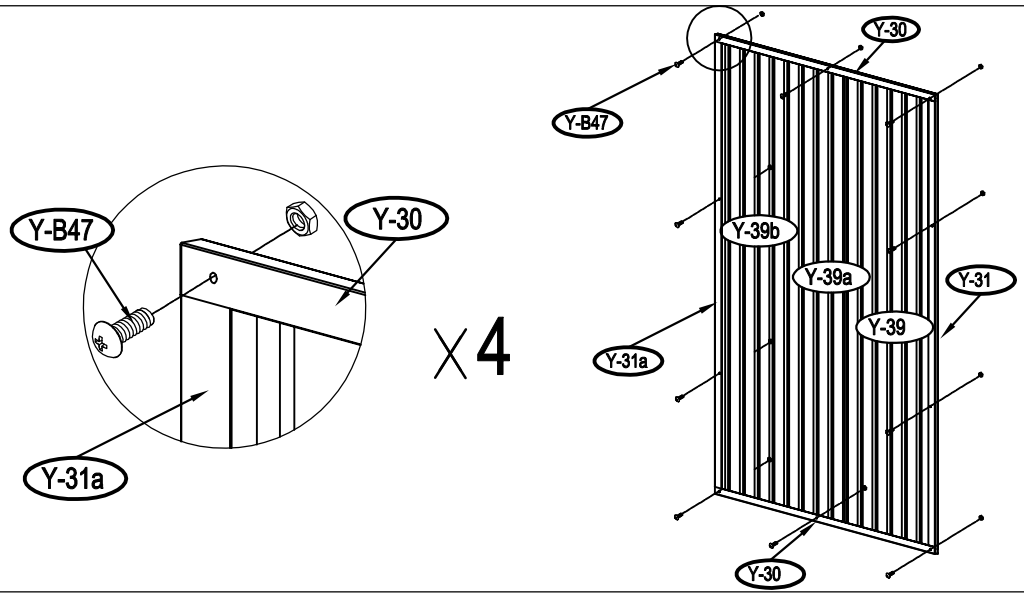
Y-30
Y-B47
Y-B47
Y-30
X4
Y-39b
Y-39a
Y-31
Y-39
Y-31a
Y-31a
Y-30

63

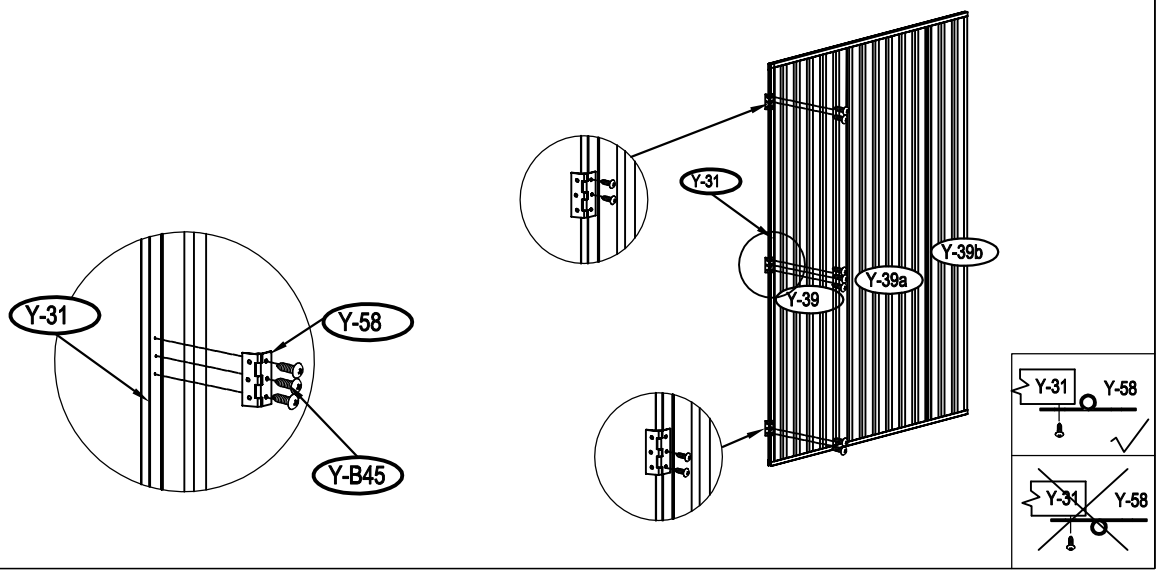
Y-31
Y-58
Y-B45
Y-31
Y-39b
Y-39a
Y-39
Y-31
Y-58
Y-31
Y-58

64

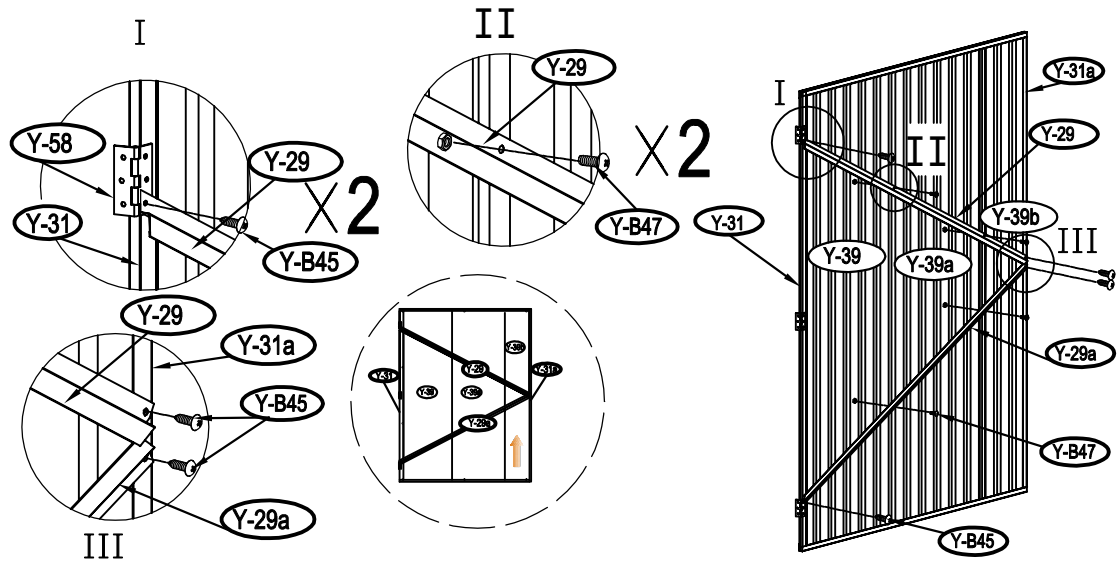
I
II
III
Y-58
Y-29
Y-31
Y-B45
X2
Y-29
Y-B47
X2
Y-29
Y-31a
Y-B45
Y-29a
I
II
III
Y-31a
Y-29
Y-39b
Y-31
Y-39
Y-39a
Y-29a
Y-B47
Y-B45

65

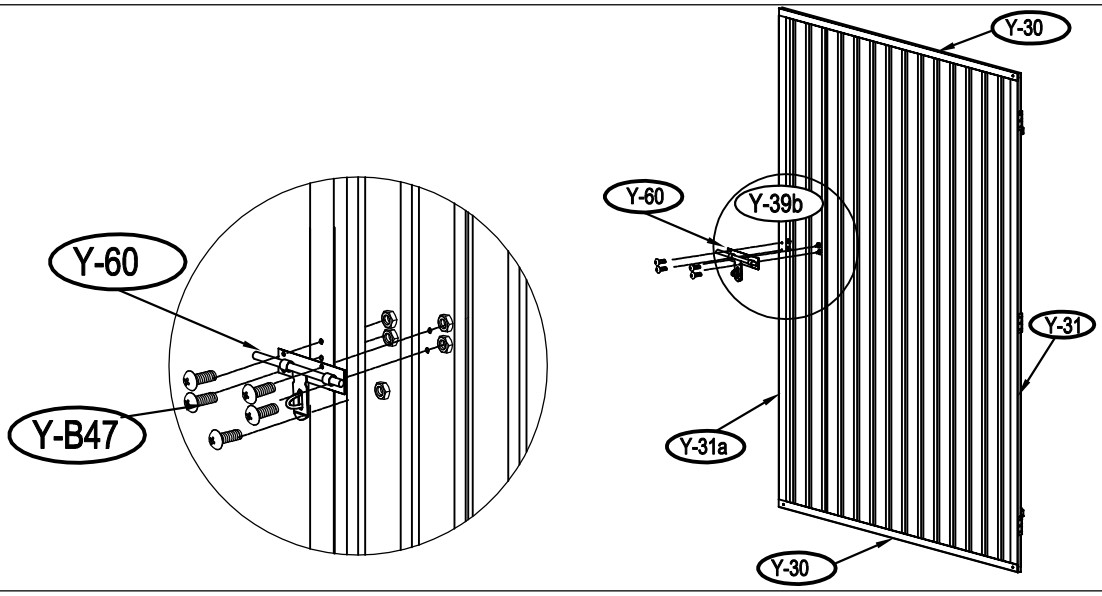
Y-60
Y-B47
Y-30
Y-60
Y-39b
Y-31
Y-31a
Y-30

66

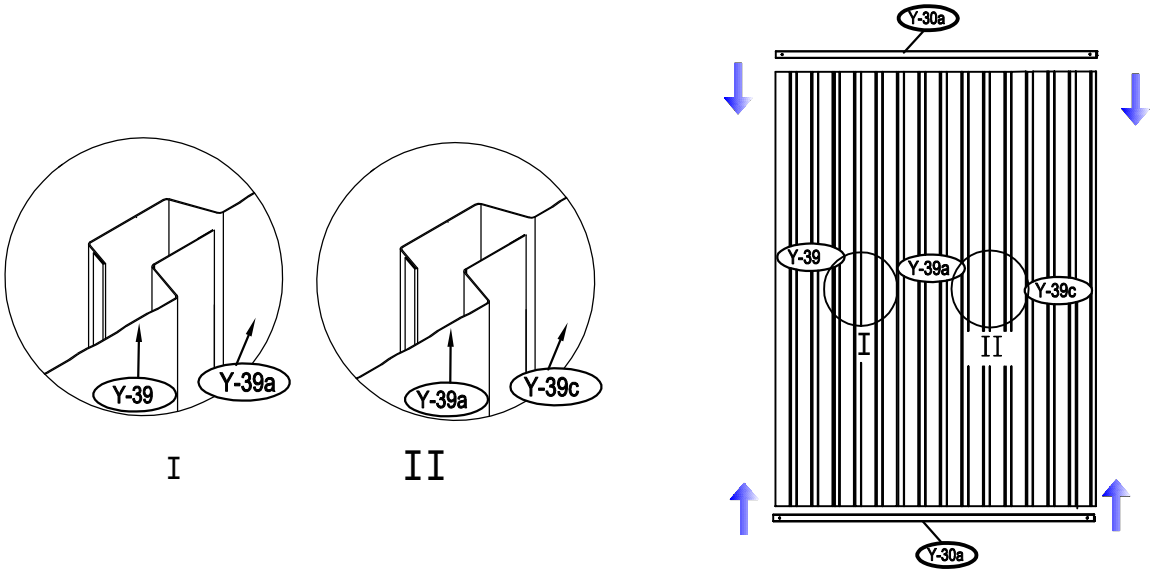
Y-39
Y-39a
Y-39a
Y-39c
I
II
Y-30a
Y-39
Y-39a
Y-39c
I
II
Y-30a

67

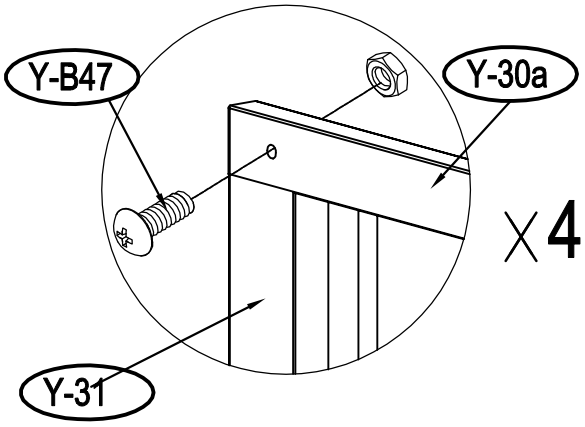
Y-B47
Y-30a
X4
Y-31

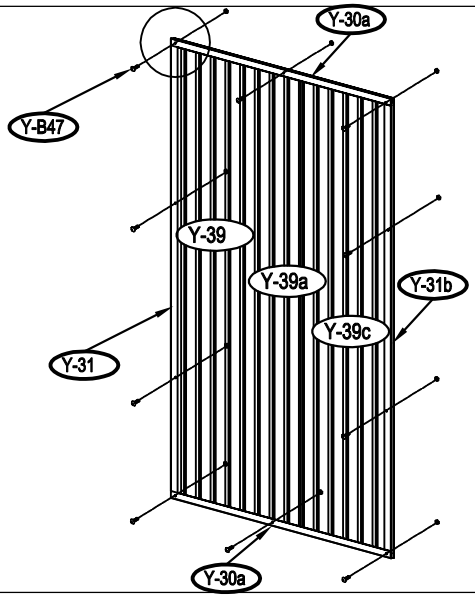
Y-30a
Y-B47
Y-39
Y-39a
Y-31b
Y-39c
Y-31
Y-30a

68

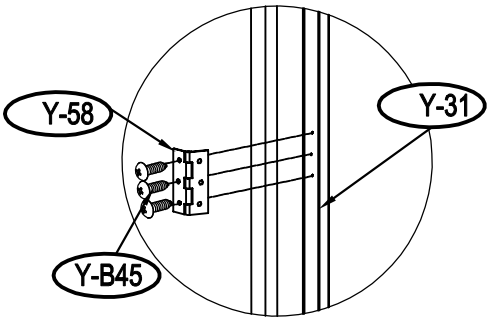
Y-58
Y-31
Y-B45

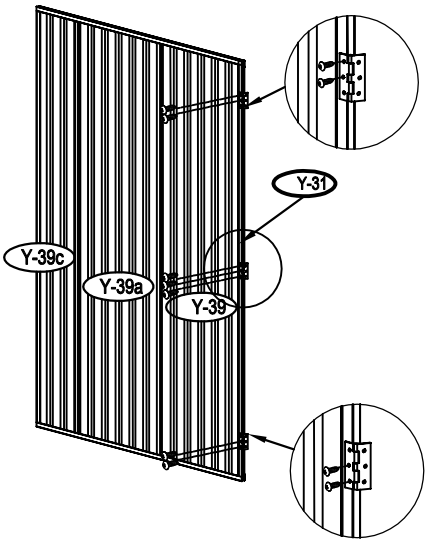
Y-31
Y-39c
Y-39a
Y-39

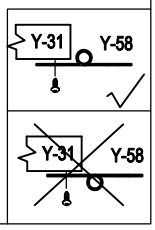
Y-31
Y-58
Y-31
Y-58

69

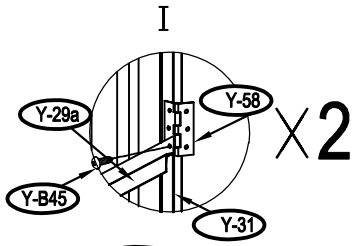
I
Y-29a
Y-58
X2
Y-B45
Y-31

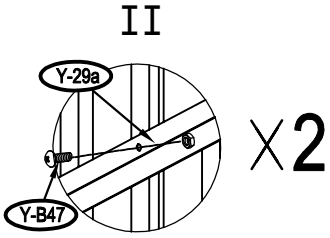
II
Y-29a
X2
Y-B47

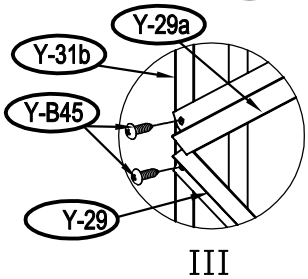
Y-29a
Y-31b
Y-B45
Y-29
III

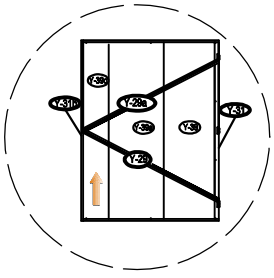

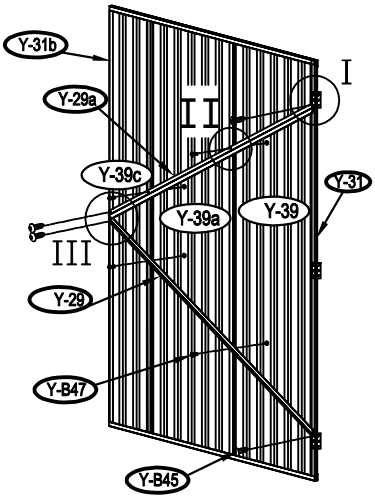
Y-31b
I
Y-29a
II
Y-39c
Y-31
Y-39a
Y-39
III
Y-29
Y-B47
Y-B45

70

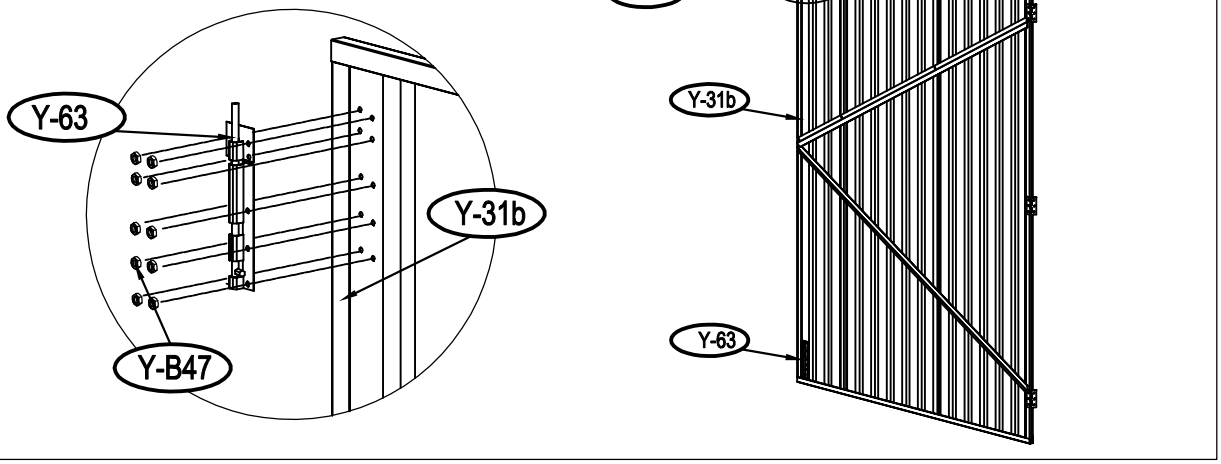
Y-63
Y-31b
Y-B47
Y-63
Y-B47
Y-30a
Y-31b
Y-63

71

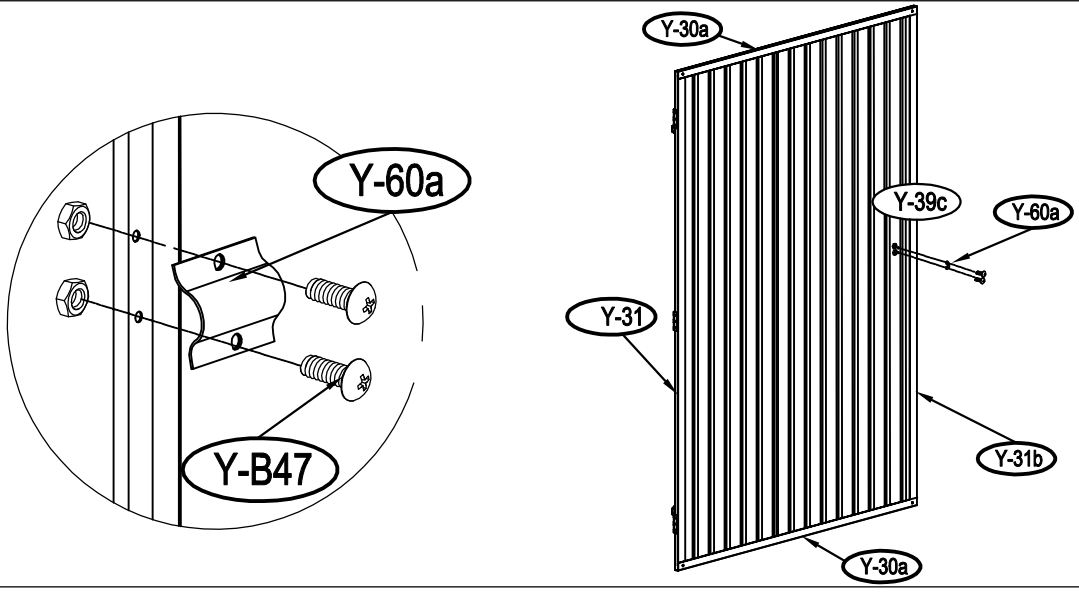
Y-60a
Y-B47
Y-30a
Y-39c
Y-60a
Y-31
Y-31b
Y-30a

72

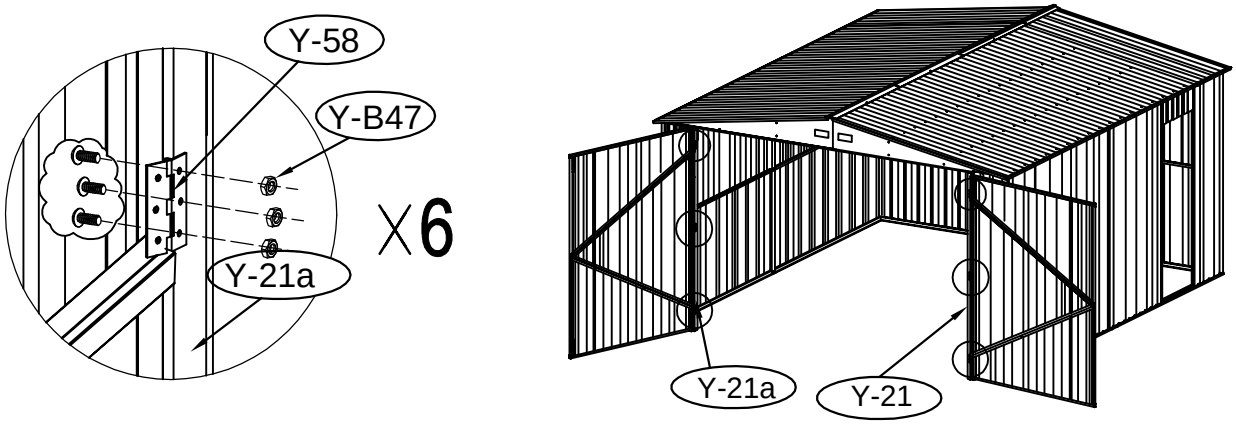
Y-58
Y-B47
X6
Y-21a
Y-21a
Y-21

73

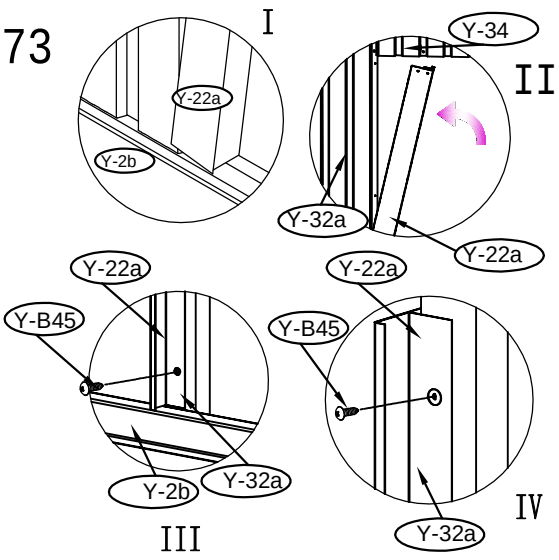
I
Y-22a
Y-2b
II
Y-34
Y-32a
Y-22a
Y-22a
Y-B45
Y-2b
Y-32a
III
Y-22a
Y-B45
Y-32a
IV

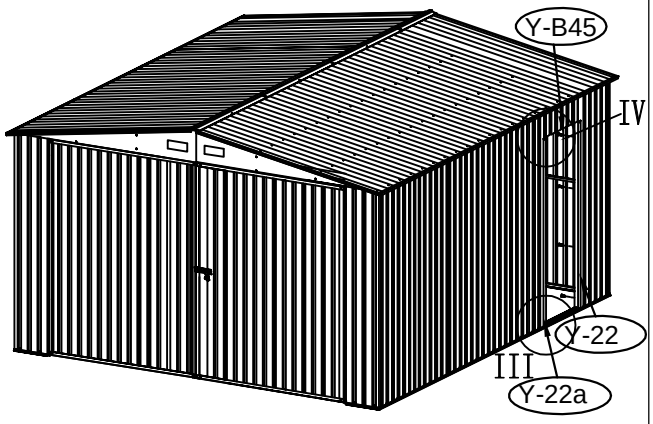
Y-B45
IV
Y-22
III
Y-22a

74

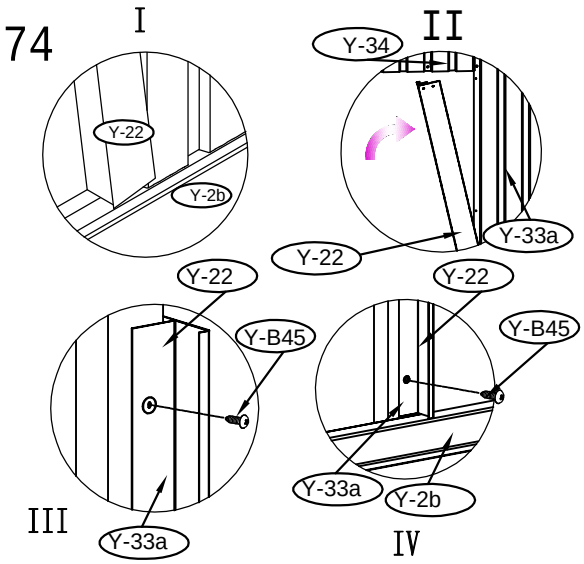
I
Y-22
Y-2b
II
Y-34
Y-33a
Y-22
Y-22
Y-22
Y-B45
Y-B45
III
Y-33a
Y-33a
Y-2b
IV

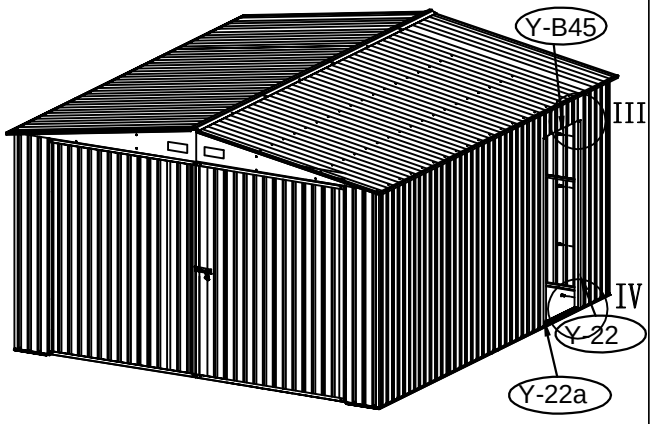
Y-B45
III
IV
Y-22
Y-22a

75

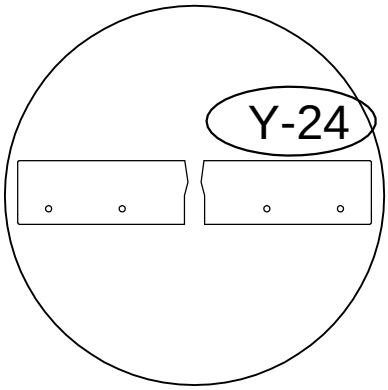
Y-24

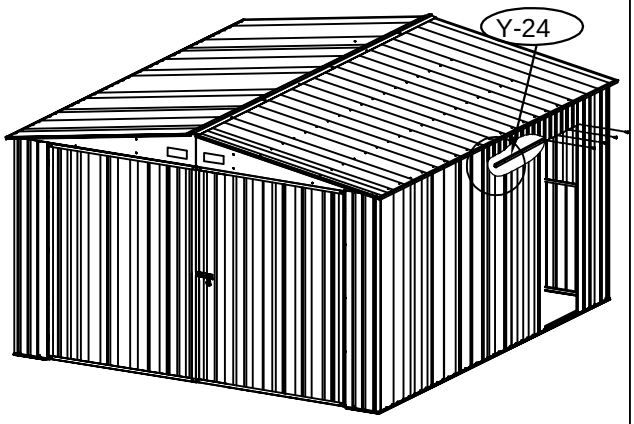
Y-24

76

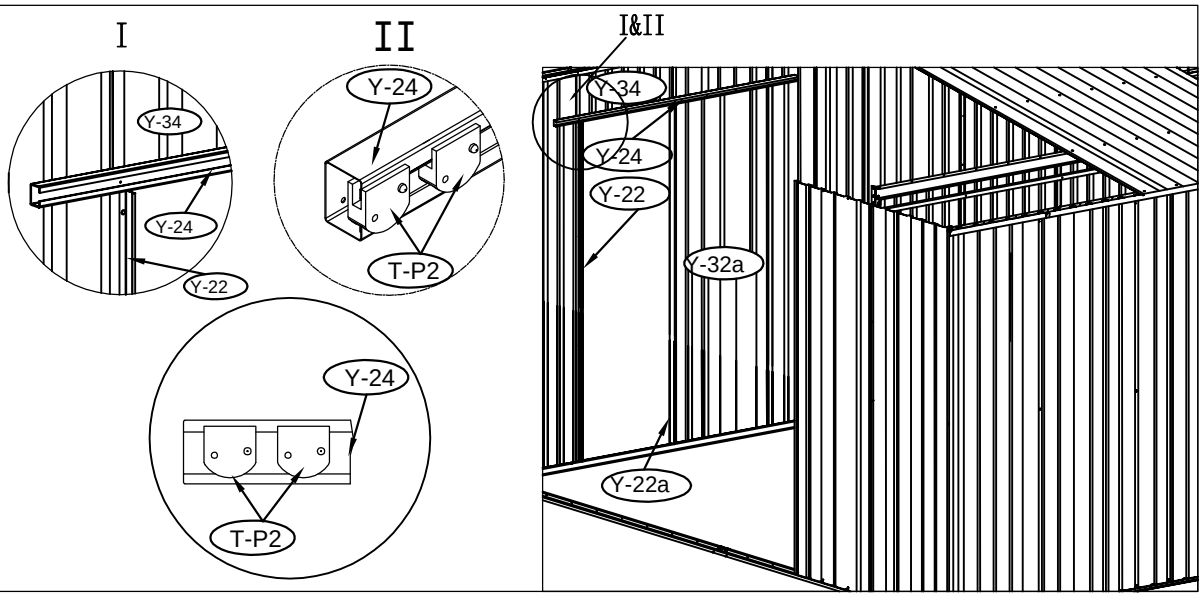
I
II
I&II
Y-34
Y-24
Y-22
T-P2
Y-32a
Y-22a

77

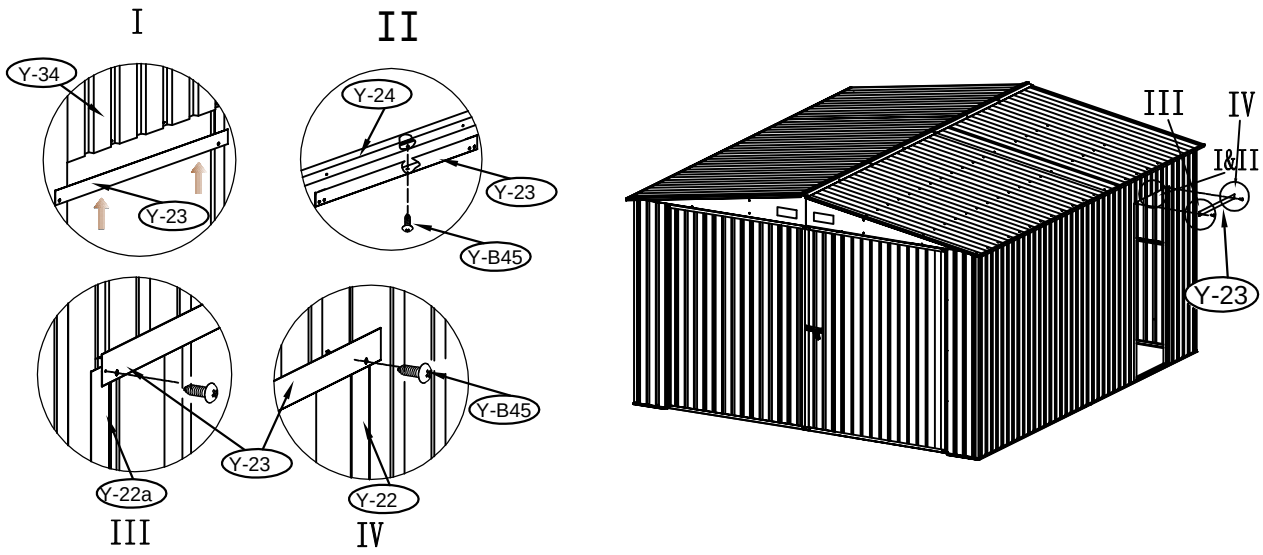
I
II
III
IV
I&II
Y-34
Y-24
Y-23
Y-B45
Y-22a
Y-22

78

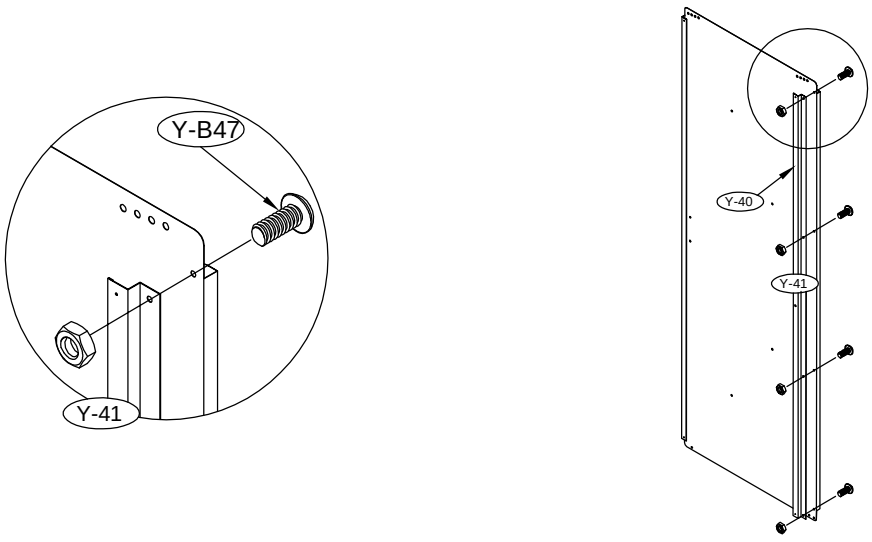
Y-B47
Y-41
Y-40

79

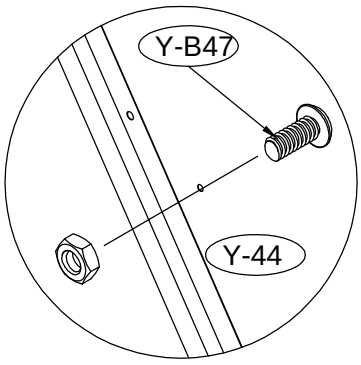

X4

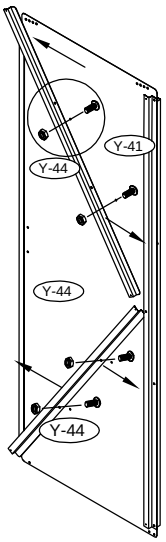

80

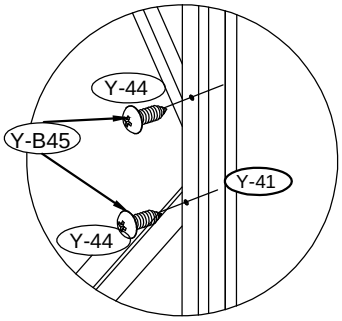

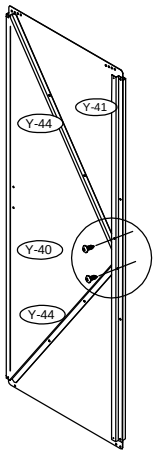

81

I

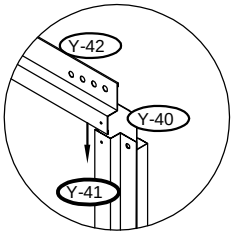

II

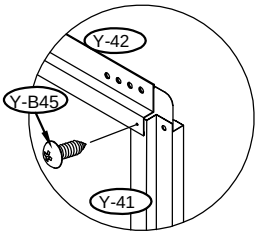

III

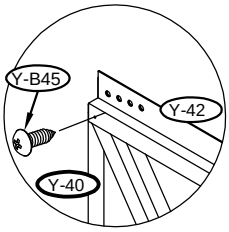

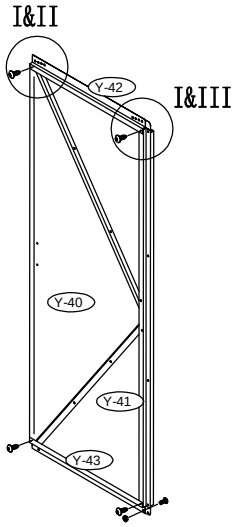

82

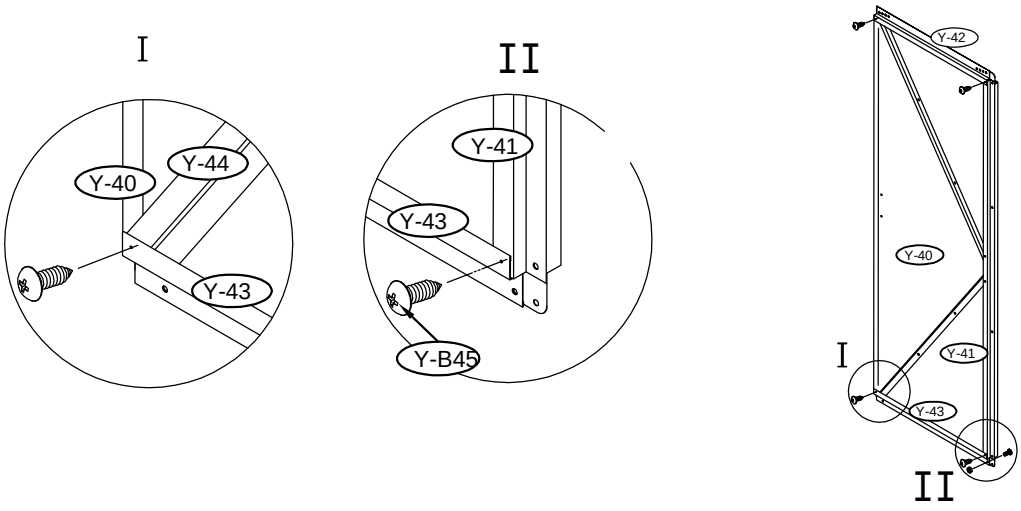
I
II
Y-40
Y-44
Y-43
Y-41
Y-43
Y-B45
Y-42
Y-40
I
Y-41
Y-43
II

83

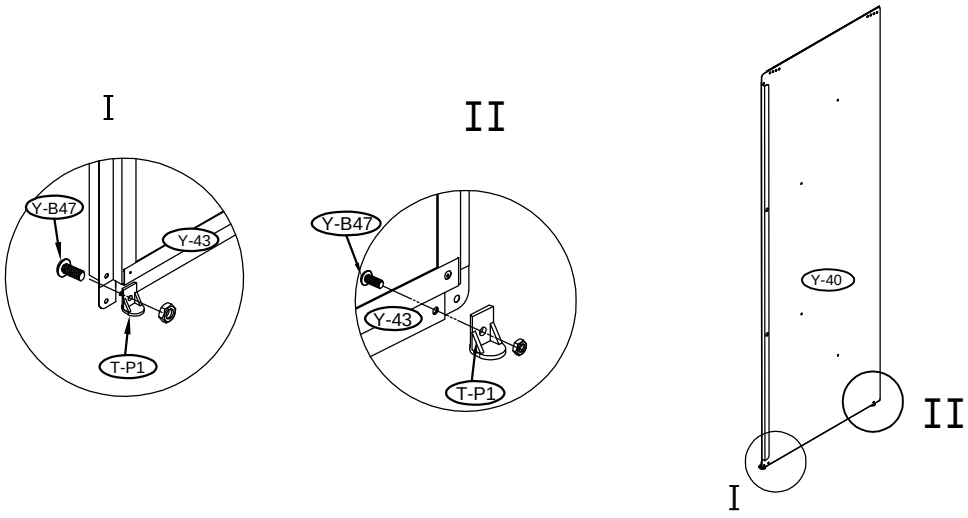
I
II
Y-B47
Y-43
T-P1
Y-B47
Y-43
T-P1
Y-40
II
I

84

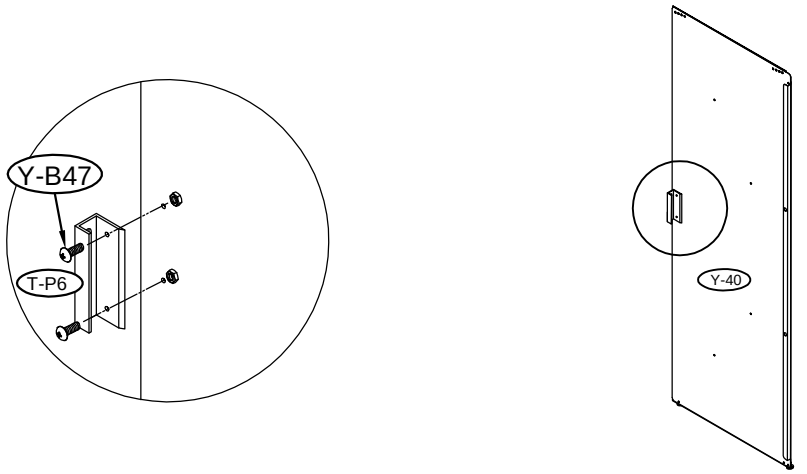
Y-B47
T-P6
Y-40

85

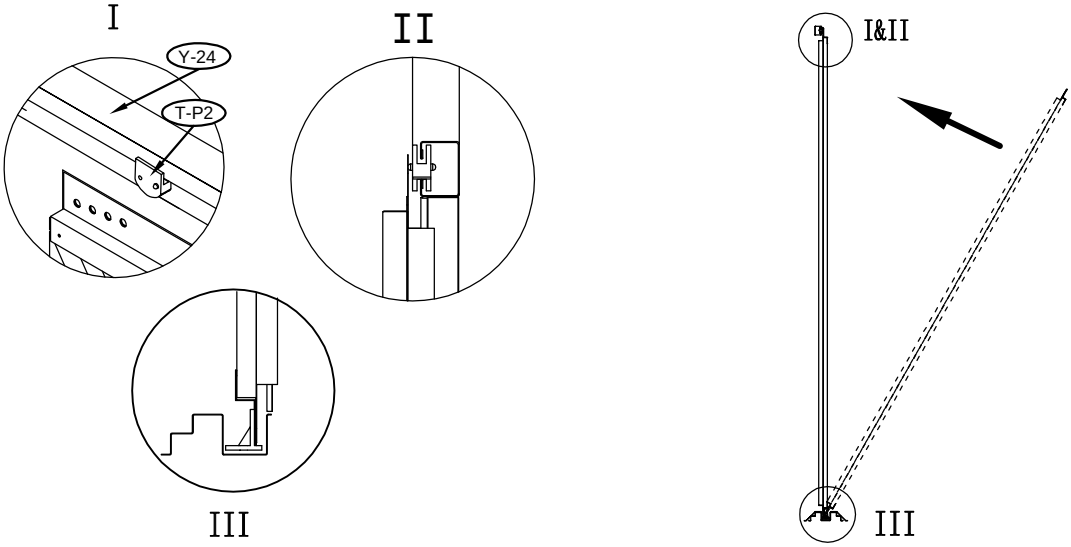
I
II
Y-24
T-P2
III
I&II
III

86

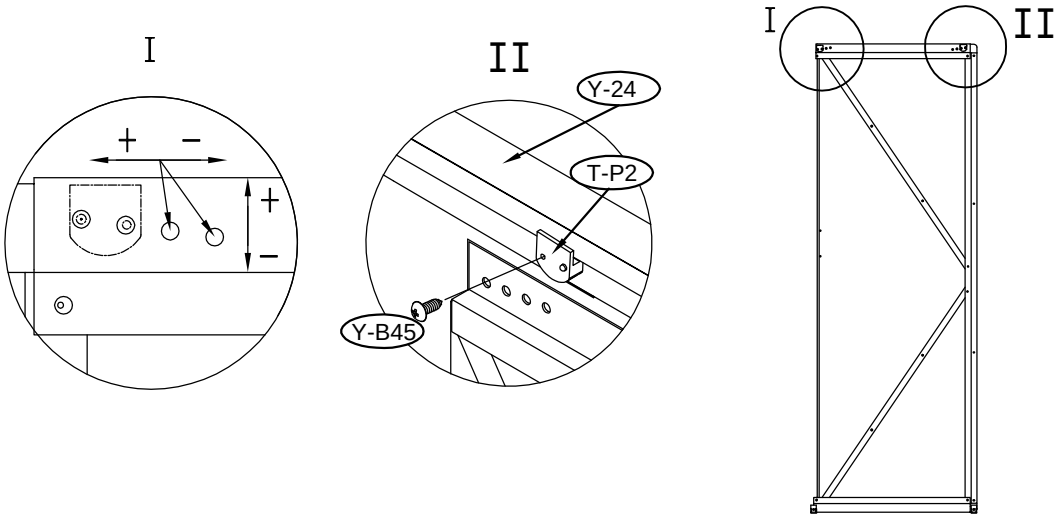
I
II
+
−
+
−
Y-24
T-P2
Y-B45
I
II

87

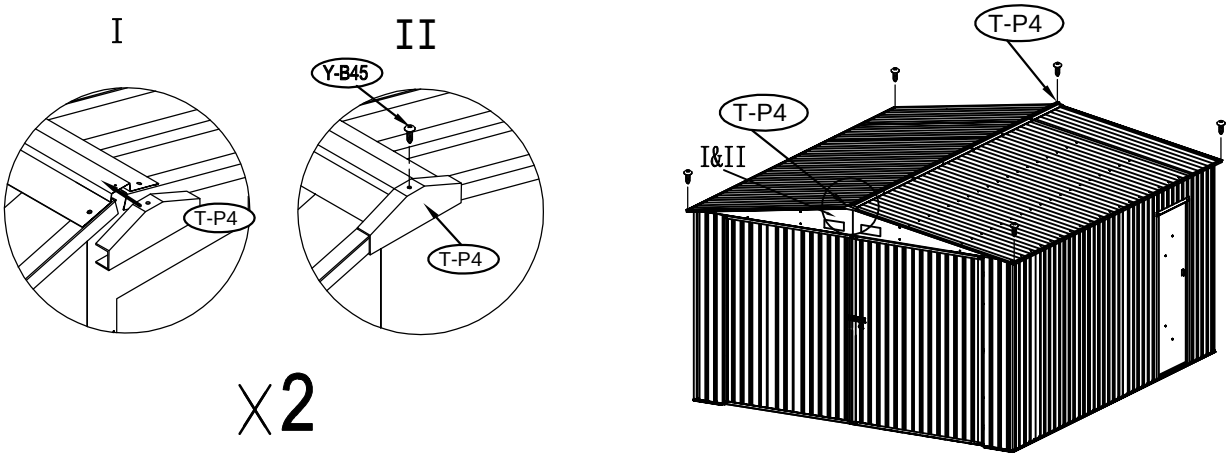
I
II
Y-B45
T-P4
T-P4
T-P4
T-P4
I&II

X2

88

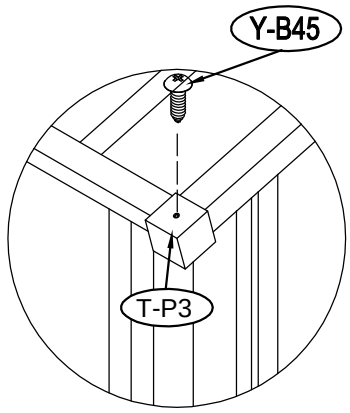

X4

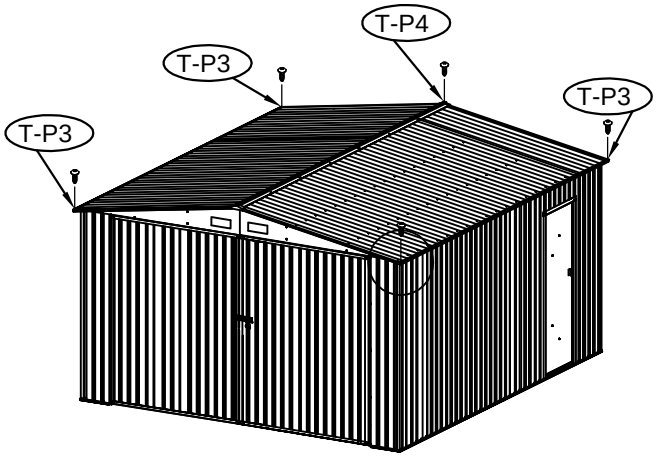

89

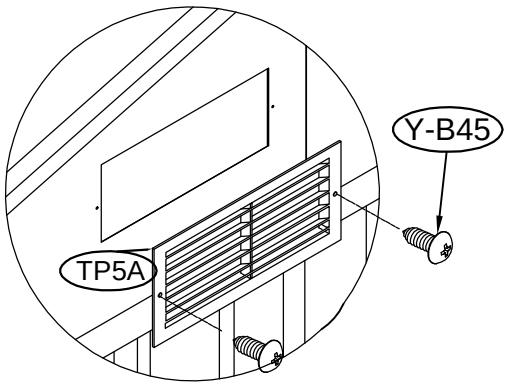

X4

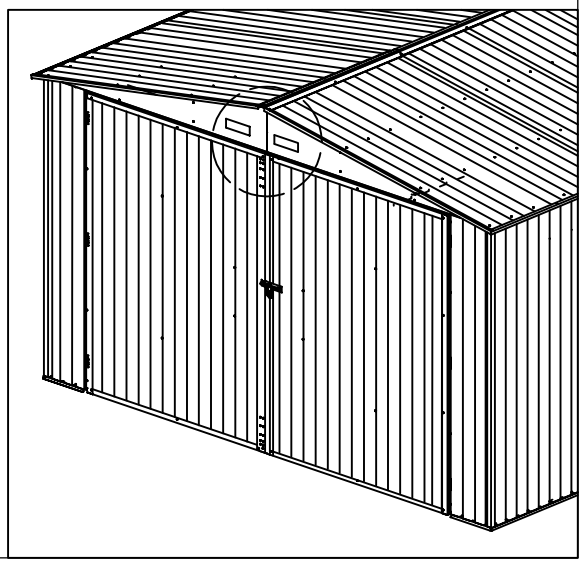

90

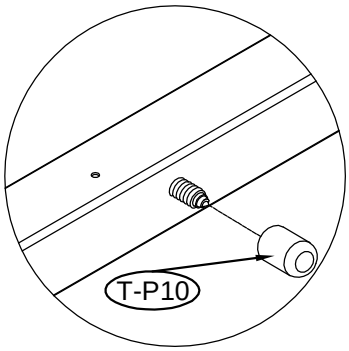

X64

