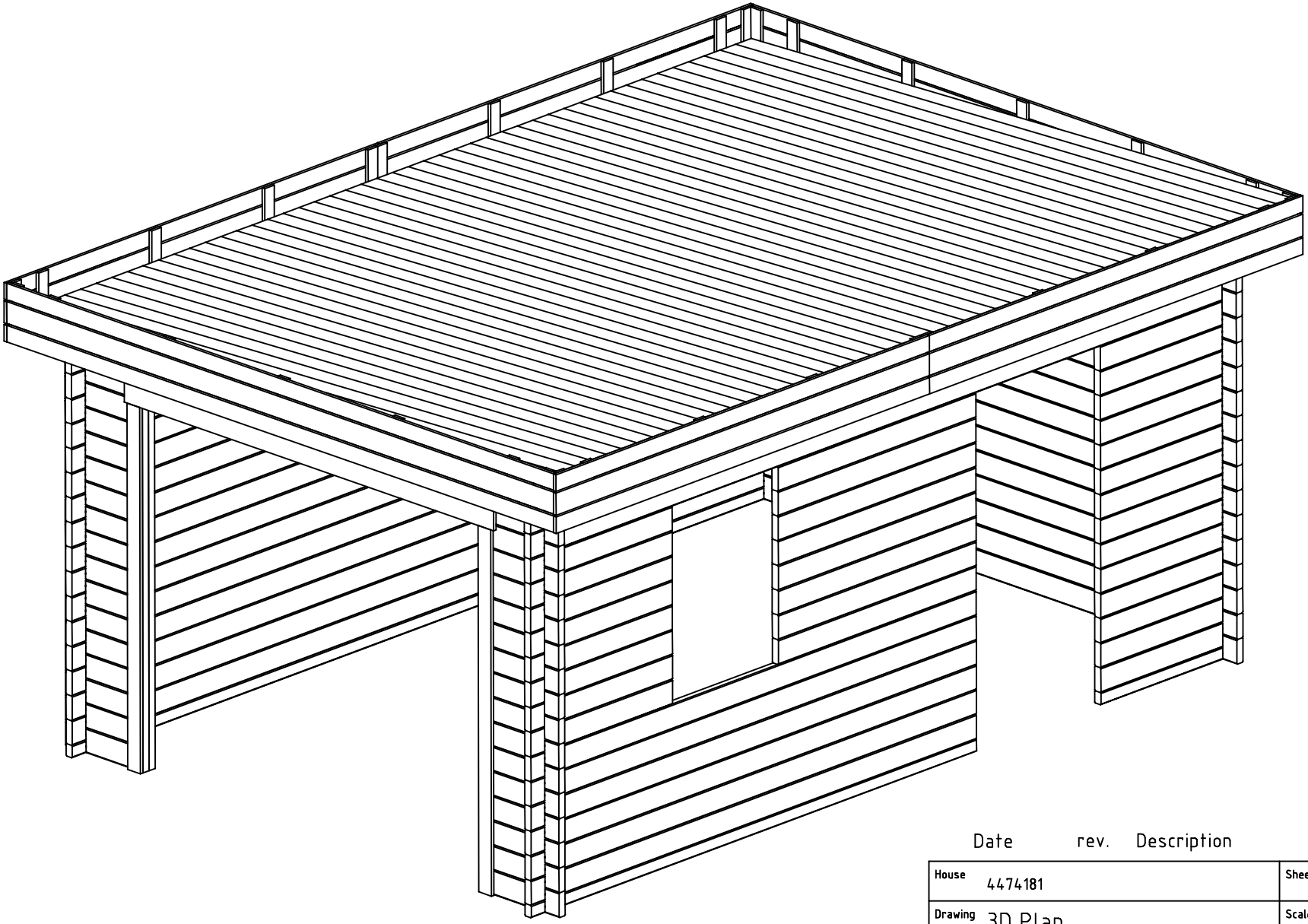

| Date | rev. | Description |
|---|---|---|

| | | | |
|---|---|---|---|
| House | 4474181 | Sheet | 1 |
| Drawing | 3D Plan | Scale | |
| Material | 44x135 | Date | 05.01.2024 |
| Drawer | RP | File | 4474181 3D.dwg |

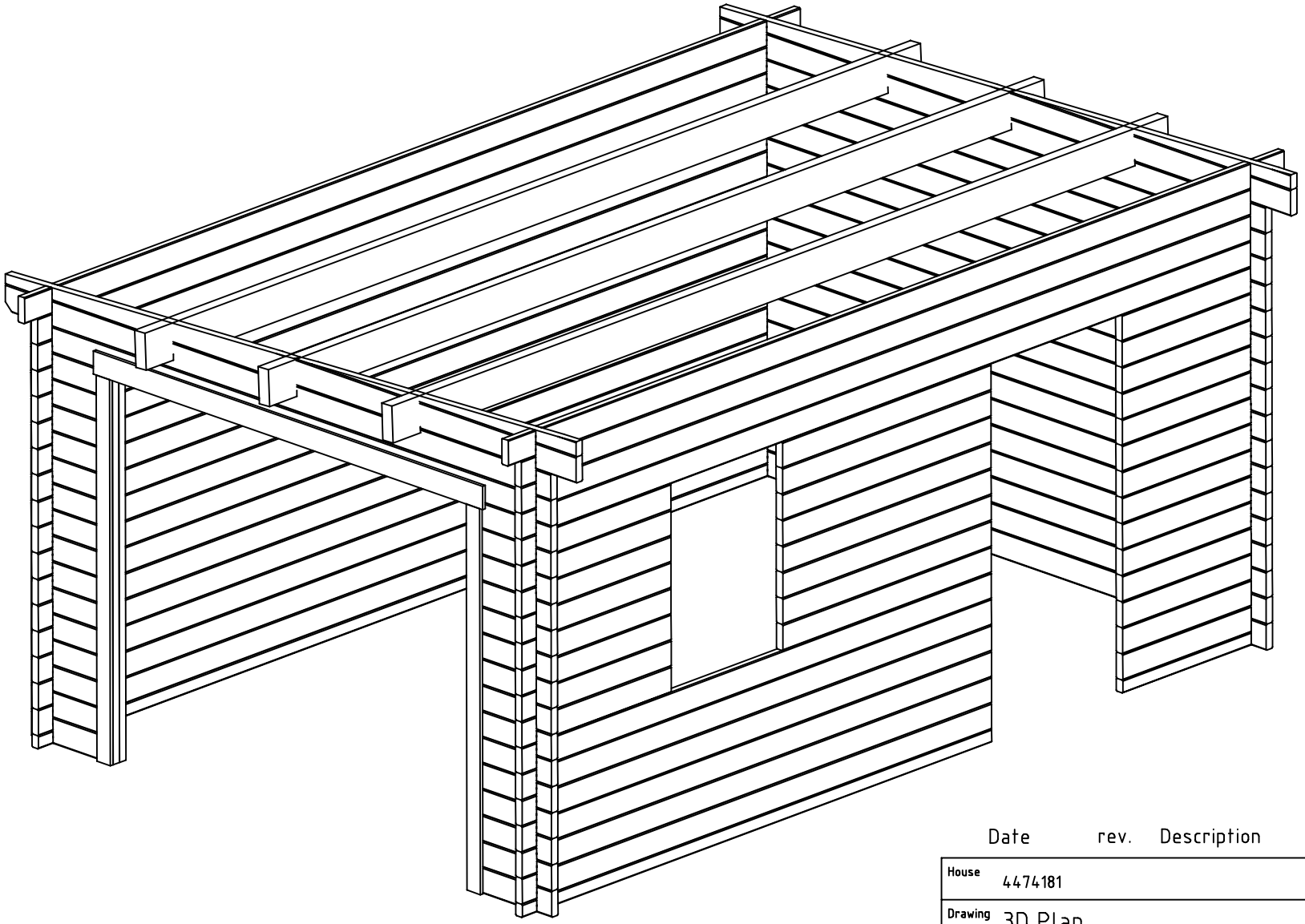

| Date | rev. | Description |
|---|---|---|

| | | | |
|---|---|---|---|
| House | 4474181 | Sheet | 2 |
| Drawing | 3D Plan | Scale | |
| Material | 44x135 | Date | 05.01.2024 |
| Drawer | RP | File | 4474181 3D.dwg |

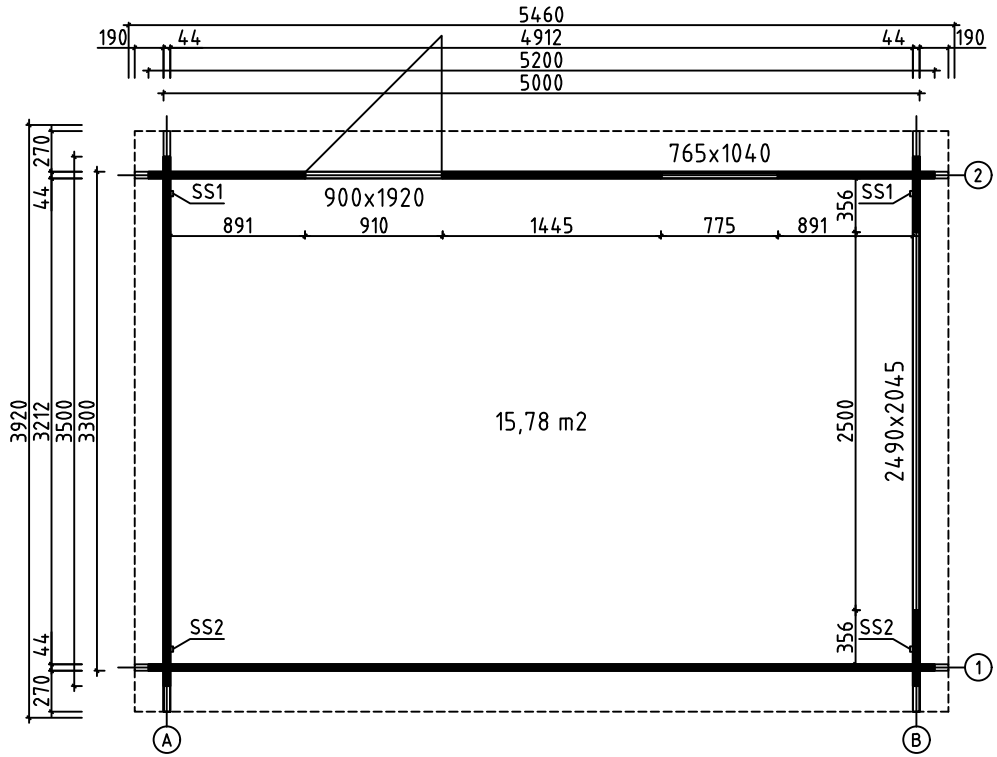


| | | | |
|---|---|---|---|
| House | 4474181 | Sheet | 3 |
| Drawing | GROUNDPLAN | Scale | 1:50 |
| Material | 44x135 | Date | 05.01.2024 |
| Drawer | RP | File | 4474181.dwg |

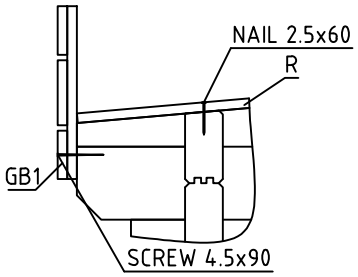


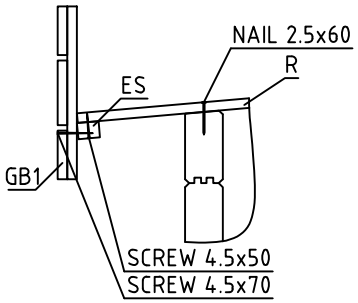


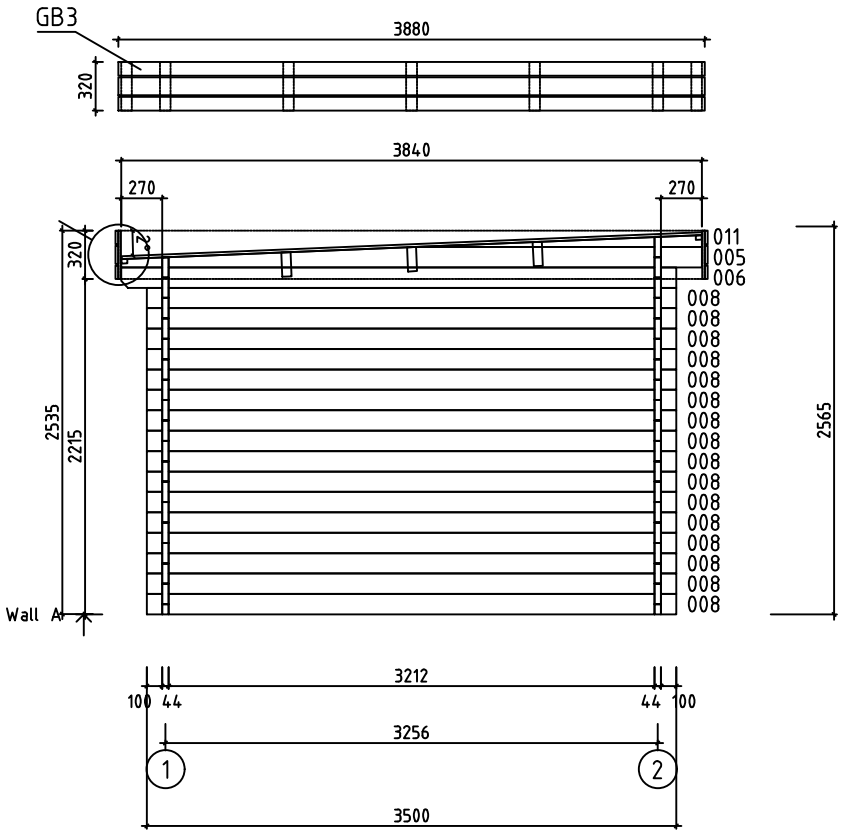


| | | | |
|---|---|---|---|
| House | 4474181 | Sheet | 4 |
| Drawing | WALL A | Scale | 1:50 |
| Material | 44x135 | Date | 05.01.2024 |
| Drawer | RP | File | 4474181.dwg |

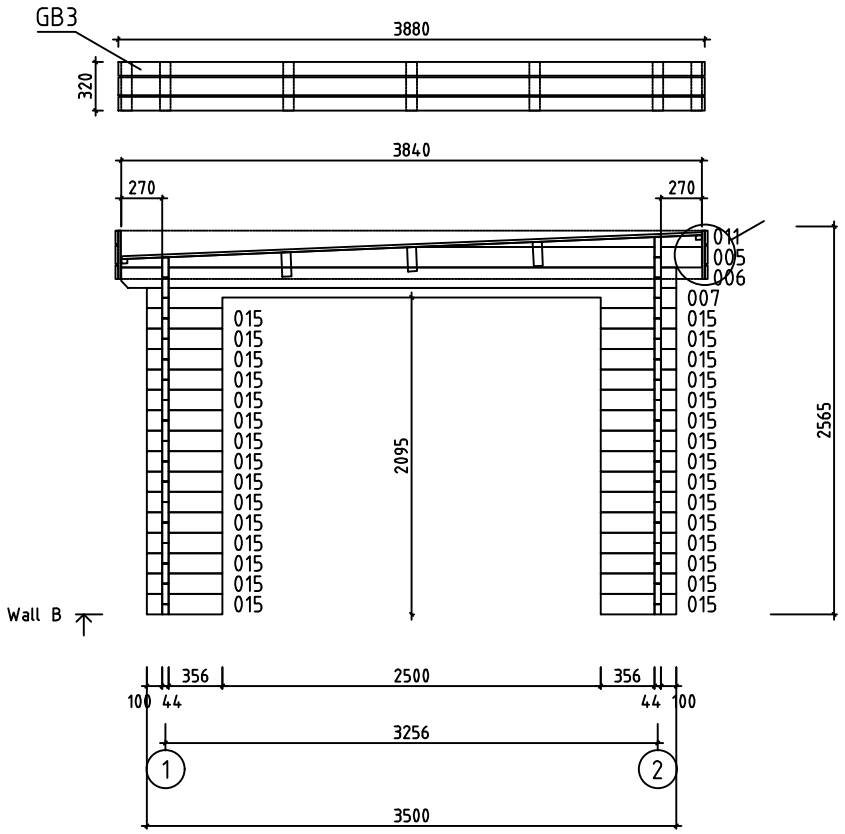


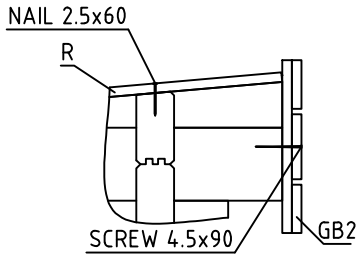


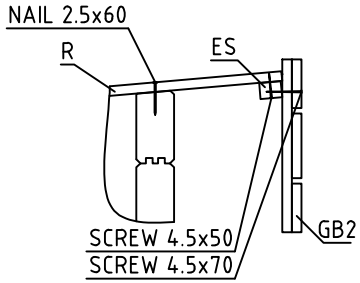


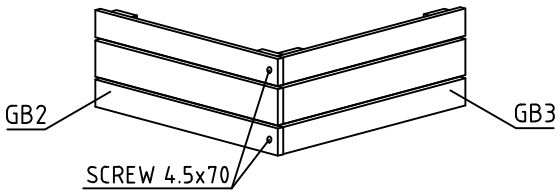


| | | | |
|---|---|---|---|
| House | 4474181 | Sheet | 5 |
| Drawing | WALL B | Scale | 1:50 |
| Material | 44x135 | Date | 05.01.2024 |
| Drawer | RP | File | 4474181.dwg |

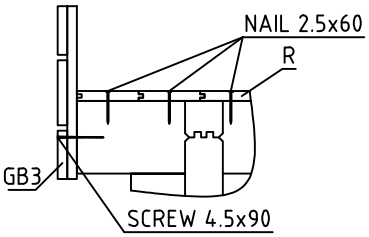


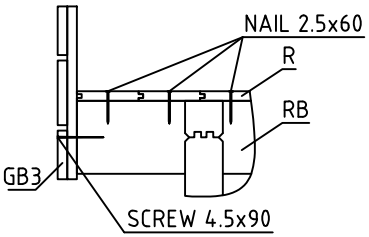


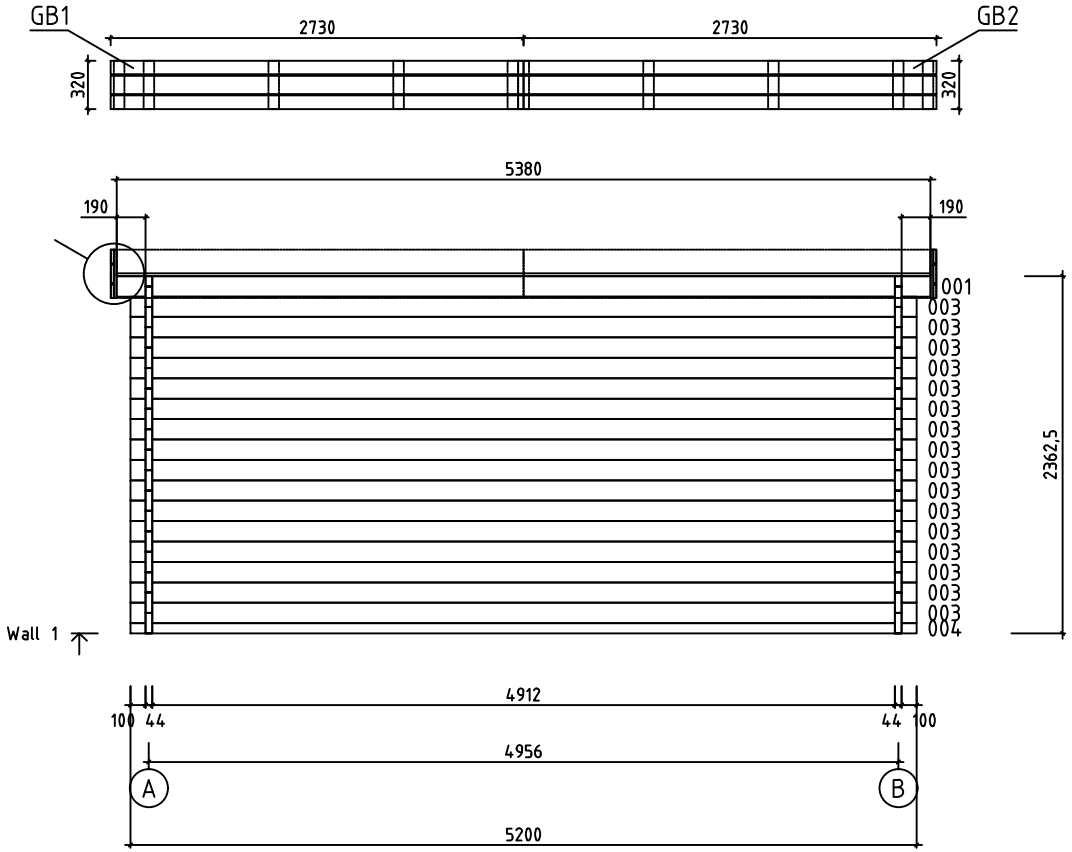


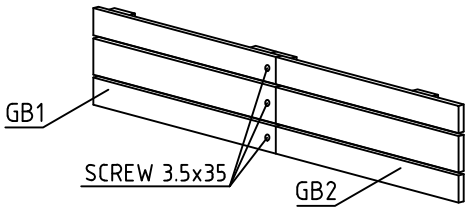


| | | | |
|---|---|---|---|
| House | 4474181 | Sheet | 6 |
| Drawing | WALL 1 | Scale | 1:50 |
| Material | 44x135 | Date | 05.01.2024 |
| Drawer | RP | File | 4474181.dwg |

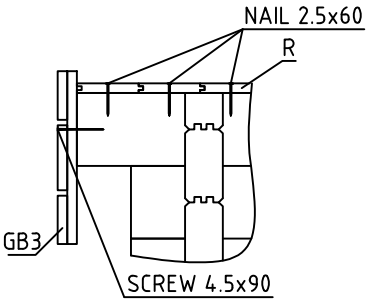


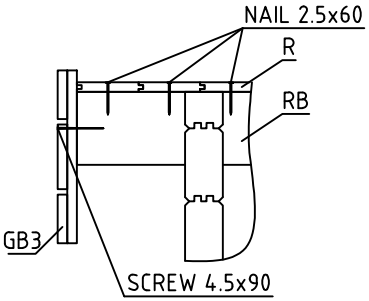


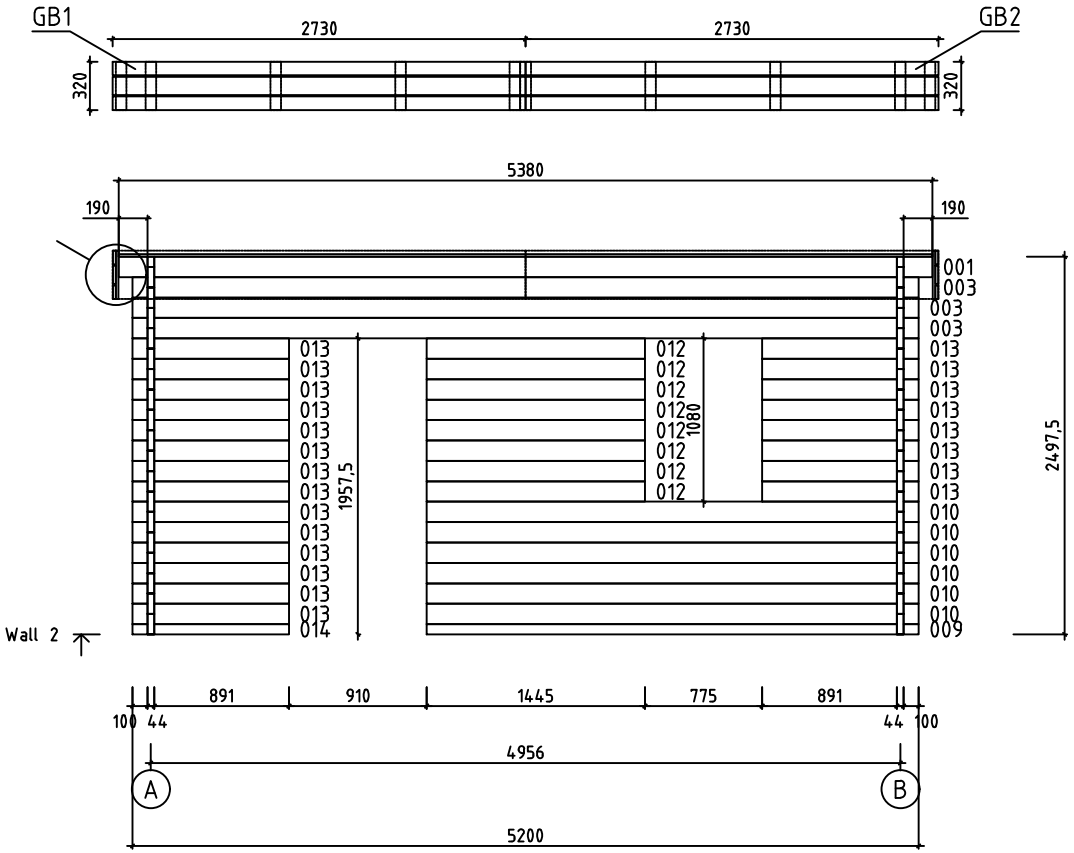


| | | | |
|---|---|---|---|
| House | 4474181 | Sheet | 7 |
| Drawing | WALL 2 | Scale | 1:50 |
| Material | 44x135 | Date | 05.01.2024 |
| Drawer | RP | File | 4474181.dwg |

| Pos | Specification-Bestimmung-Spécification | PCS | Profile (mm) | L (mm) |
|---|---|---|---|---|
| 001 | 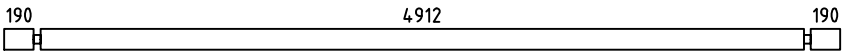 | 2 | 44x135 | 5380 |
| 002 | SPARE BEAM-ERZATZBOHLE-MADRIER DE RÉSERVE<br>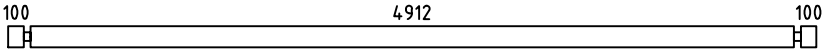 | 1 | 44x135 | 5200 |
| 003 | 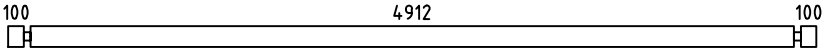 | 19 | 44x135 | 5200 |
| 004 | 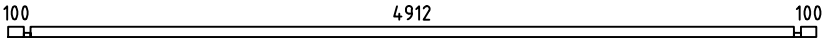 | 1 | 44x68 | 5200 |
| 007 | 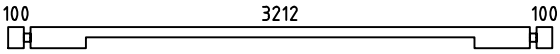 | 1 | 44x135 | 3500 |
| 008 | 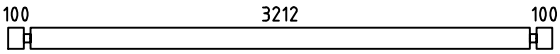 | 16 | 44x135 | 3500 |
| 009 | 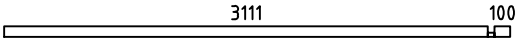 | 1 | 44x68 | 3255 |
| 010 | 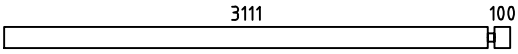 | 6 | 44x135 | 3255 |
| 012 | 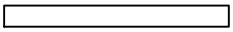 | 8 | 44x135 | 1445 |
| 013 | 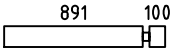 | 22 | 44x135 | 1035 |
| 014 | 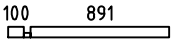 | 1 | 44x68 | 1035 |
| 015 |  | 30 | 44x135 | 500 |
| WA-1<br>WB-1 | 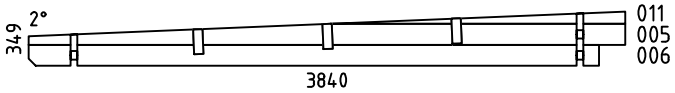 | 2 | 44x349 | 3840 |
| HB | HIT BLOCK-SCHLAGHÖLZER-MADRIERS D´ASSEMBLAGE  | 2 | 44x135 | 300 |
| FS1 | FIXING MECHANISM OF THE ELECTRIC MOTOR-BEFESTIGUNGSMECHANISMUS DES ELEKTROMOTORS-MADRIER DE FIXATION DU MOTEUR ÉLECTRIQUE  | 1 | 45x90 | 3280 |
| RB1 | ROOFBEAMS-DACHBALKEN-SOLIVES DE PLAFOND<br>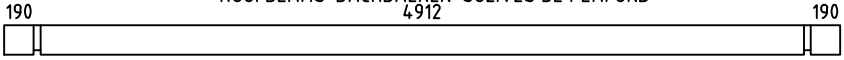 | 3 | 68x190 | 5380 |
| R1 | ROOFBOARD-DACHBRETT-VOLIGES  or-oder-ou | 48+1<br>63+1 | 18x114<br>18x88 | 3840 |
| GB1 | ASSEMBLY REQUIRED-MONTAGE ERFORDERLICH-ASSEMBLAGE REQUIS<br>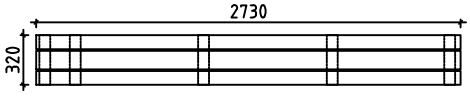 | 2 | 36x320 | 2730 |
| GB2 | ASSEMBLY REQUIRED-MONTAGE ERFORDERLICH-ASSEMBLAGE REQUIS<br>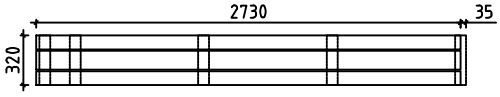 | 2 | 36x320 | 2730<br>+35 |
| GB3 | ASSEMBLY REQUIRED-MONTAGE ERFORDERLICH-ASSEMBLAGE REQUIS<br>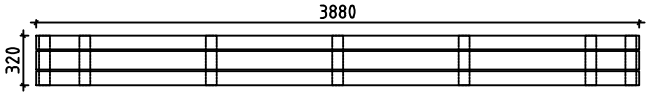 | 2 | 36x320 | 3880 |
| ES1 | EAVE SLAT-TRAUFENLEISTE-BAGUETTES POUR FIXER LES LATTES SOUS VOLIGES  | 4 | 30x40 | 2455 |

| House 4474181 | Material | File 4474181.dwg | Sheet 9 |
|---|---|---|---|

| Pos | Specification-Bestimmung-Spécification | PCS | Profile (mm) | L (mm) |
|---|---|---|---|---|
| ES2 | EAVE SLAT-TRAUFENLEISTE-BAGUETTES POUR FIXER LES LATTES SOUS VOLIGES | 4 | 30x40 | 190 |
| SS1 | STORM SLAT-STURMLEISTE -BAGUETTE DE TEMPETE TYPE 2 | 2 | 18x35 | 2390 |
| SS2 | STORM SLAT-STURMLEISTE -BAGUETTE DE TEMPETE TYPE 2 | 2 | 18x35 | 2290 |
| LCM | CONNECTING METAL-VERBINDEN VON METALL-CONNECTEUR MÉTALLIQUE | 2 | 45 | 135 |
| | SCREWS-SCHRAUBEN-VISSER FOR-FÜR-POUR SS1, SS2 | 8 | M8 | 90 |
| | WASHER-SCHEIBE-RONDELLE FOR-FÜR-POUR SS1, SS2 | 8 | M8 | |
| | NUT-NUSS-ÉCROU FOR-FÜR-POUR SS1, SS2 | 8 | M8 | |
| | NAIL-NAGEL-CLOUS FOR-FÜR-POUR R1 | 320 | ϕ2.5 | 60 |
| | SCREWS-SCHRAUBEN-VIS FOR-FÜR-POUR LCM, GB1, GB2, GB3 | 228 | ϕ3.5 | 35 |
| | SCREWS-SCHRAUBEN-VIS FOR-FÜR-POUR ES1, ES2, L1, L2 | 30 | ϕ4.5 | 50 |
| | SCREWS-SCHRAUBEN-VIS FOR-FÜR-POUR GB1, GB2, GB3 | 20 | ϕ4.5 | 70 |
| | SCREWS-SCHRAUBEN-VIS FOR-FÜR-POUR FS1, P1, P2, P3, P4 GB1, GB2, GB3 | 50 | ϕ4.5 | 90 |
| | SCREWS-SCHRAUBEN-VIS FOR-FÜR-POUR WA-1, WB-1, RB1 | 20 | ϕ6.0 | 160 |
| | FRAME AROUND ENTRANCE-RAHMEN UM DEN EINGANG-CADRE AUTOUR DE L'ENTRÉE | 1 | 2490 | 2045 |
| | DOOR-TÜR-PORTE (left-links-gauche) AST_ISO_PL V | 1 | 900 | 1920 |
| | | 1 | | |
| | | 1 | | |

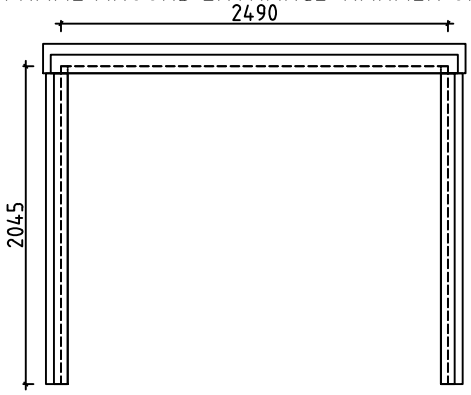


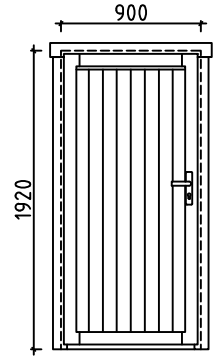


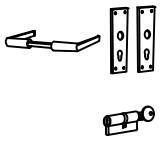

| House 4474181 | Material | File 4474181.dwg | Sheet 10 |
|---|---|---|---|

| Pos | Specification-Bestimmung-Spécification | PCS | Profile (mm) | L (mm) |
|---|---|---|---|---|
| | WINDOW-FENSTER-FENÉTRE (right-rechts-droit) AST_PRE P | 1 | 765 | 1040 |
| | 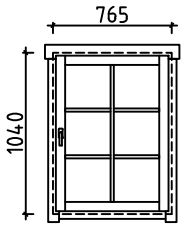  | | | |
| |  | 1 | | |
| |  | 1 | | |
| |  | 1 | | |

| House 4474181 | Material | File 4474181.dwg | Sheet 11 |
|---|---|---|---|

| Pos | Specification-Bestimmung-Spécification | PCS | Profile (mm) | L (mm) |
|---|---|---|---|---|
| P1 | BEAM-BALKEN-POUTRE | 1 | 43x190 | 2720 |
| P2 | BEAM-BALKEN-POUTRE | 2 | 43x140 | 2000 |
| P3 | BEAM-BALKEN-POUTRE | 1 | 45x46 | 2400 |
| P4 | BEAM-BALKEN-POUTRE | 2 | 45x46 | 2045 |
| L1 | BOARD-BRETT-PLANCHE | 1 | 18x120 | 2620 |
| L2 | BOARD-BRETT-PLANCHE | 2 | 18x90 | 2000 |
| | | 1 | 107x2190 | 2720 |

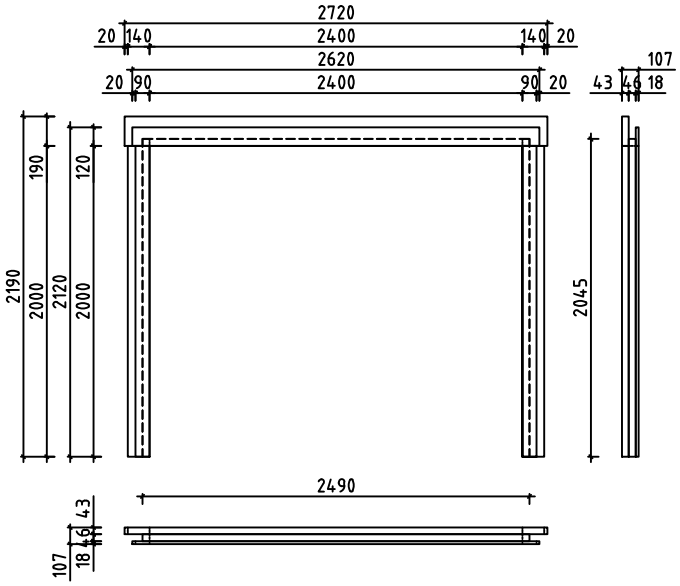


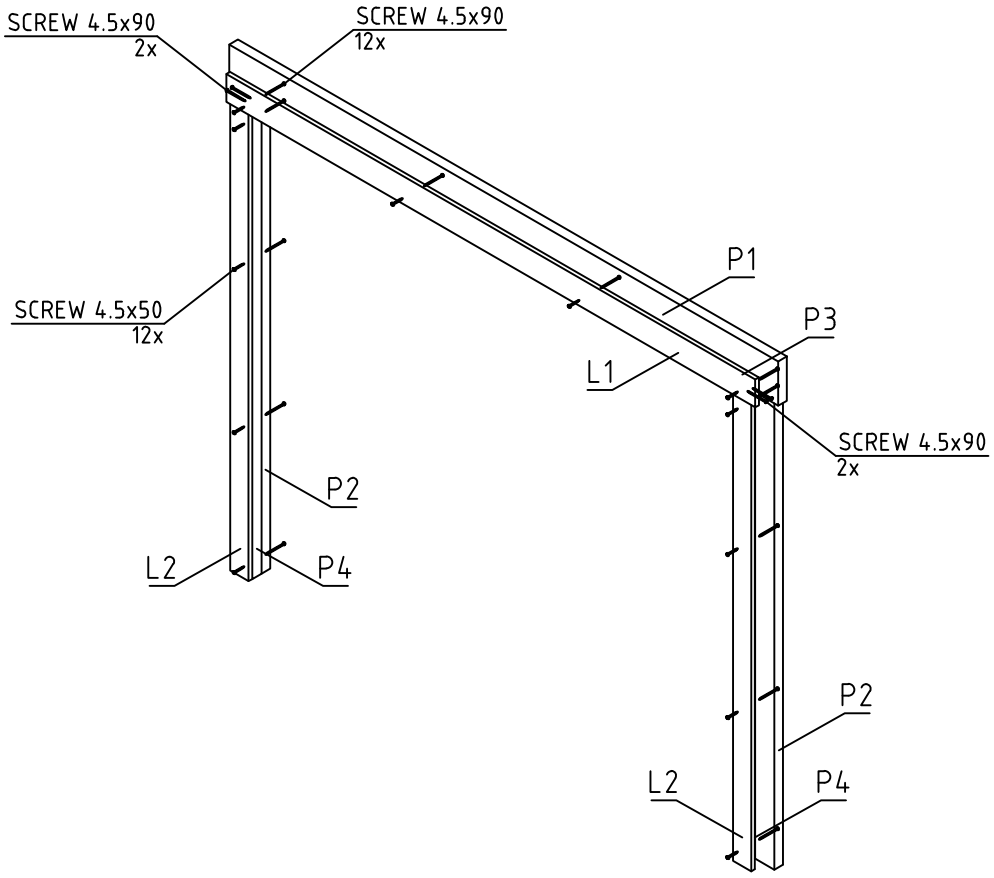


| House 4474181 | Material | File 4474181.dwg | Sheet 12 |
|---|---|---|---|

| Pos | Assembly Instructions-Montageanleitungen-Instructions de Montage | PCS | Profile (mm) | L (mm) |
|---|---|---|---|---|
| L1 | BOARD-BRETT-PLANCHE | 4 | 18x120 | 2730 |
| L2 | BOARD-BRETT-PLANCHE | 8 | 18x90 | 2730 |
| L3 | BOARD-BRETT-PLANCHE | 2 | 18x120 | 3880 |
| L4 | BOARD-BRETT-PLANCHE | 4 | 18x90 | 3880 |
| L5 | BOARD-BRETT-PLANCHE | 34 | 18x70 | 320 |
| GB1 | | 2 | 36x320 | 2730 |

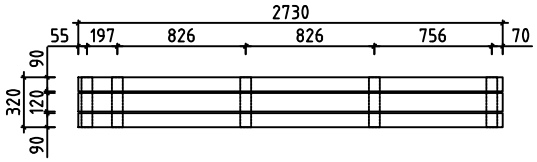


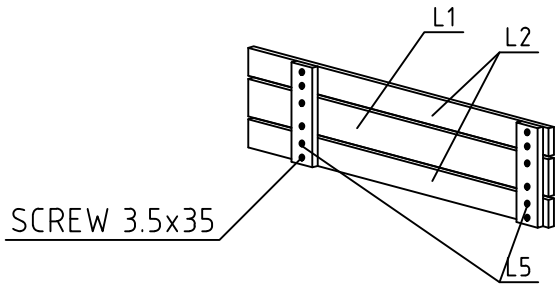


| GB2 | | 2 | 36x320 | 2730 +35 |
|---|---|---|---|---|

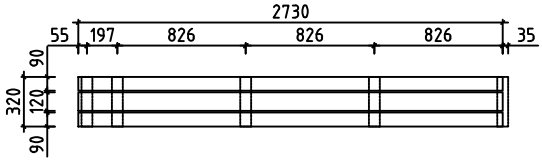


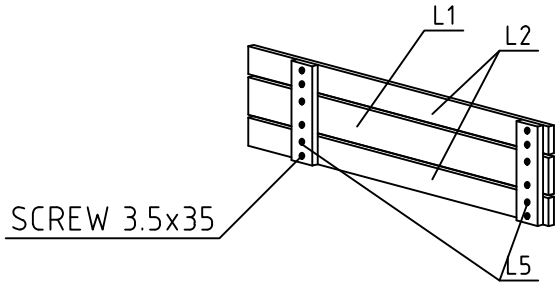


| GB3 | | 2 | 36x320 | 3880 |
|---|---|---|---|---|

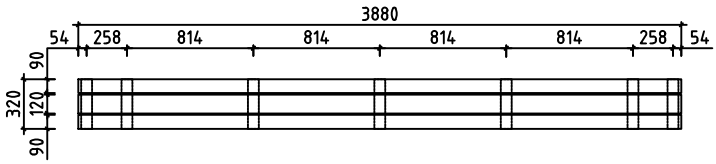


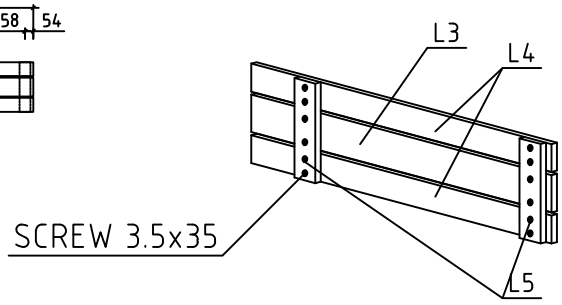

| | | | |
|---|---|---|---|
| #001 | 1,2 | 5380 | 2 |
| #002 | | 5200 | 1 |
| #003 | 1,2 | 5200 | 19 |
| #004 | 1 | 5200 | 1 |
| #005 | A,B | 3840 | 2 |
| #006 | A,B | 3670 | 2 |
| #007 | B | 3500 | 1 |
| #008 | A | 3500 | 16 |
| #009 | 2 | 3255 | 1 |
| #010 | 2 | 3255 | 6 |
| #011 | A,B | 1898 | 2 |
| #012 | 2 | 1445 | 8 |
| #013 | 2 | 1035 | 22 |
| #014 | 2 | 1035 | 1 |
| #015 | B | 500 | 30 |