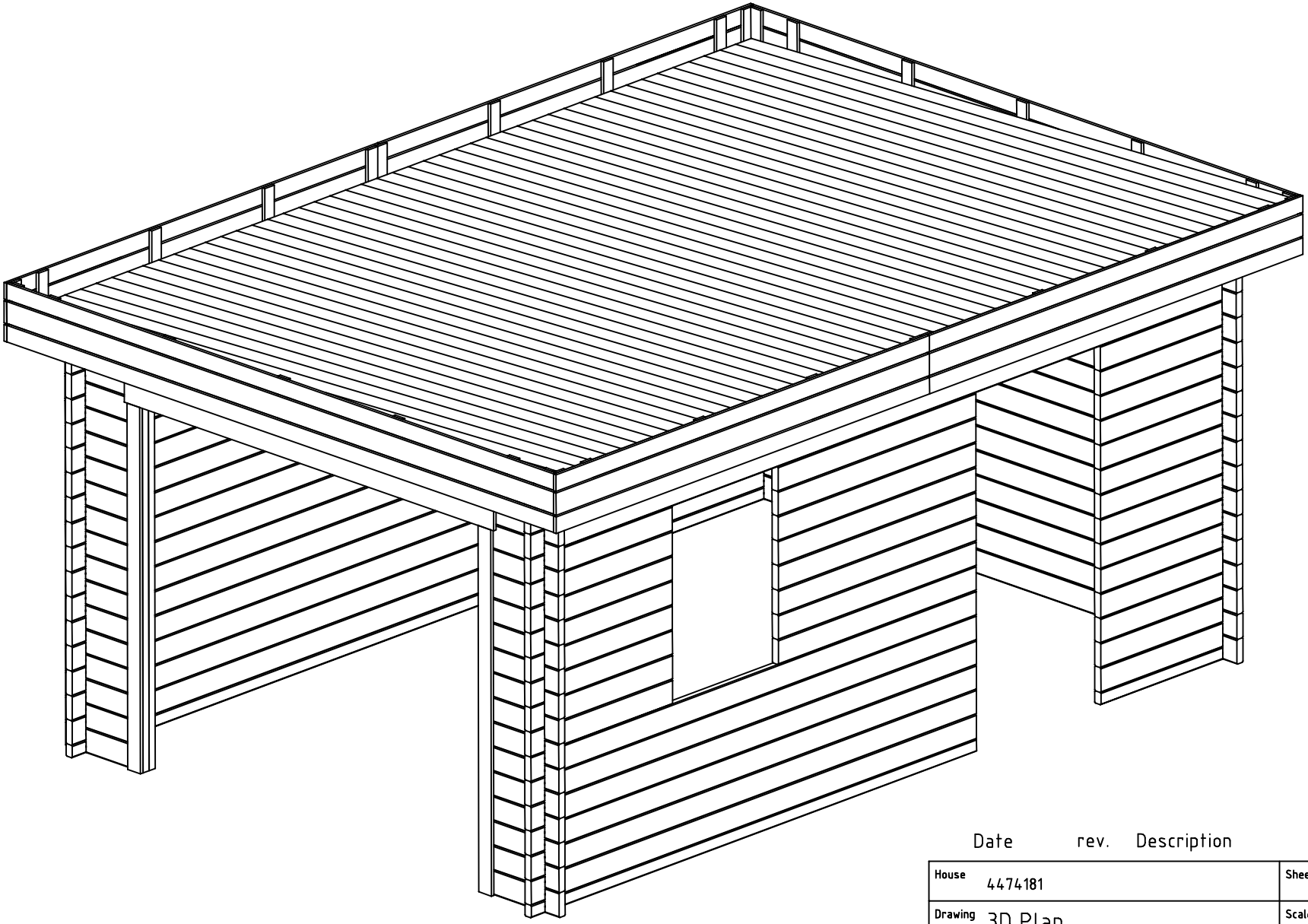

Date	rev.	Description

House	4474181	Sheet	1
Drawing	3D Plan	Scale	
Material	44x135	Date	05.01.2024
Drawer	RP	File	4474181 3D.dwg

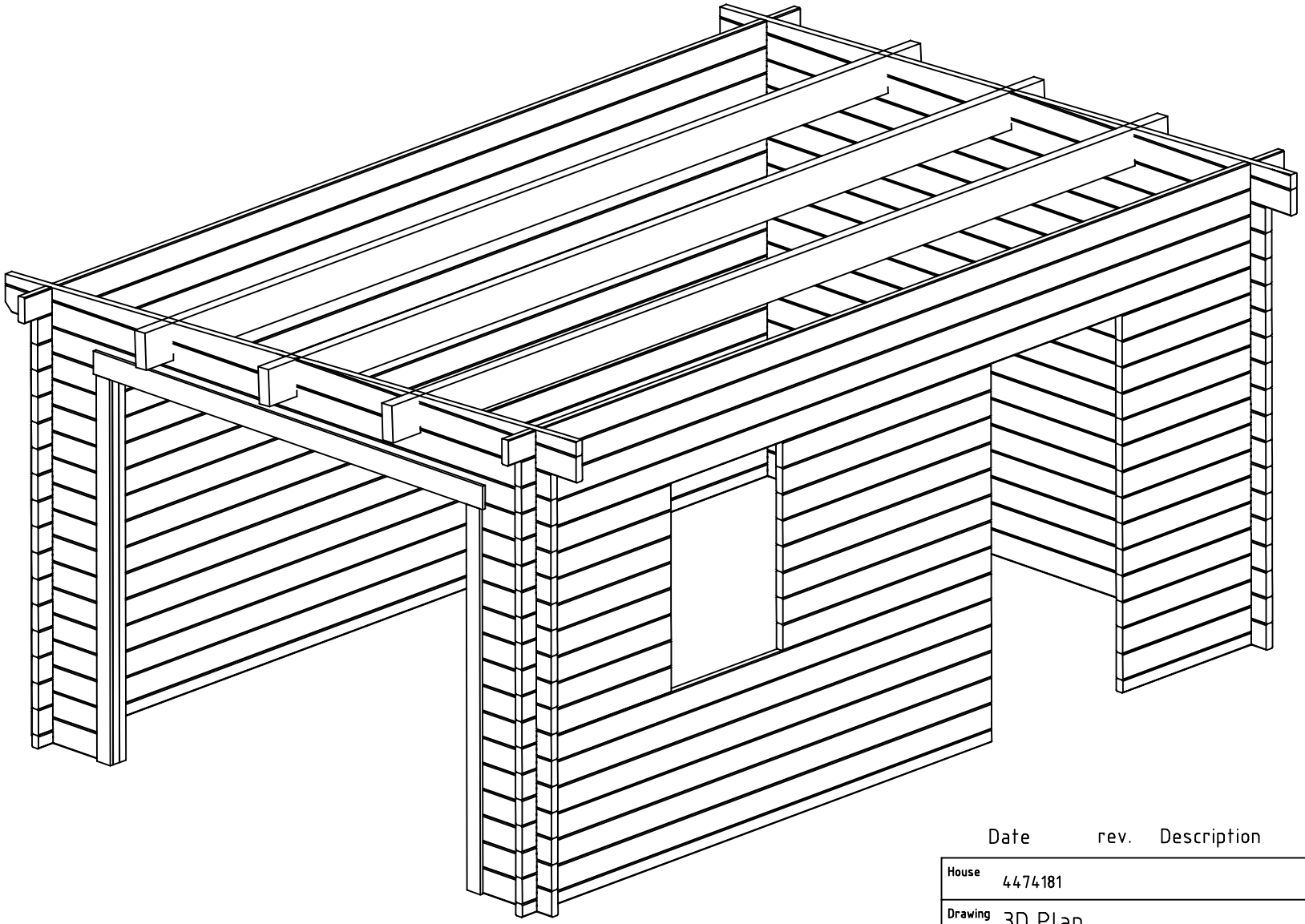

Date	rev.	Description

House	4474181	Sheet	2
Drawing	3D Plan	Scale	
Material	44x135	Date	05.01.2024
Drawer	RP	File	4474181 3D.dwg

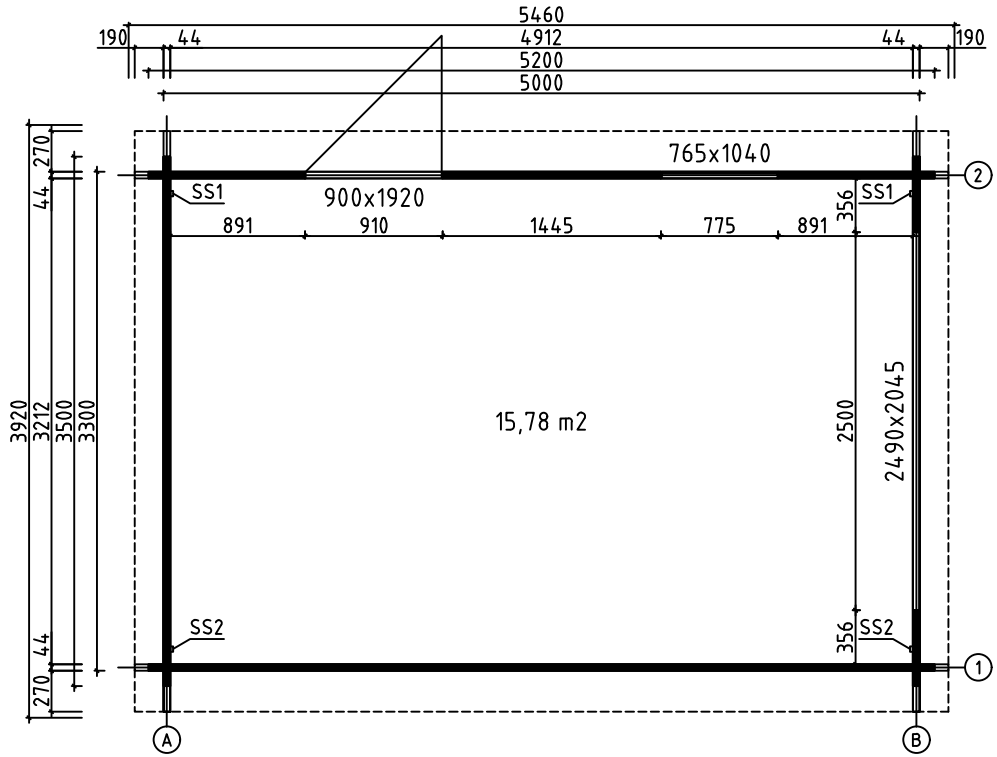

House	4474181	Sheet	3
Drawing	GROUNDPLAN	Scale	1:50
Material	44x135	Date	05.01.2024
Drawer	RP	File	4474181.dwg

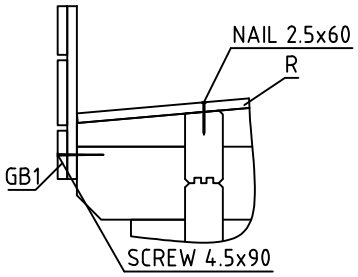

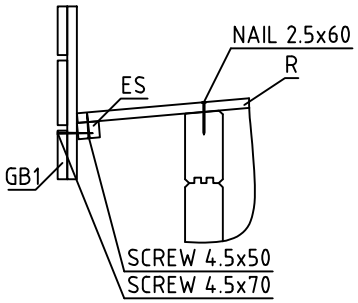

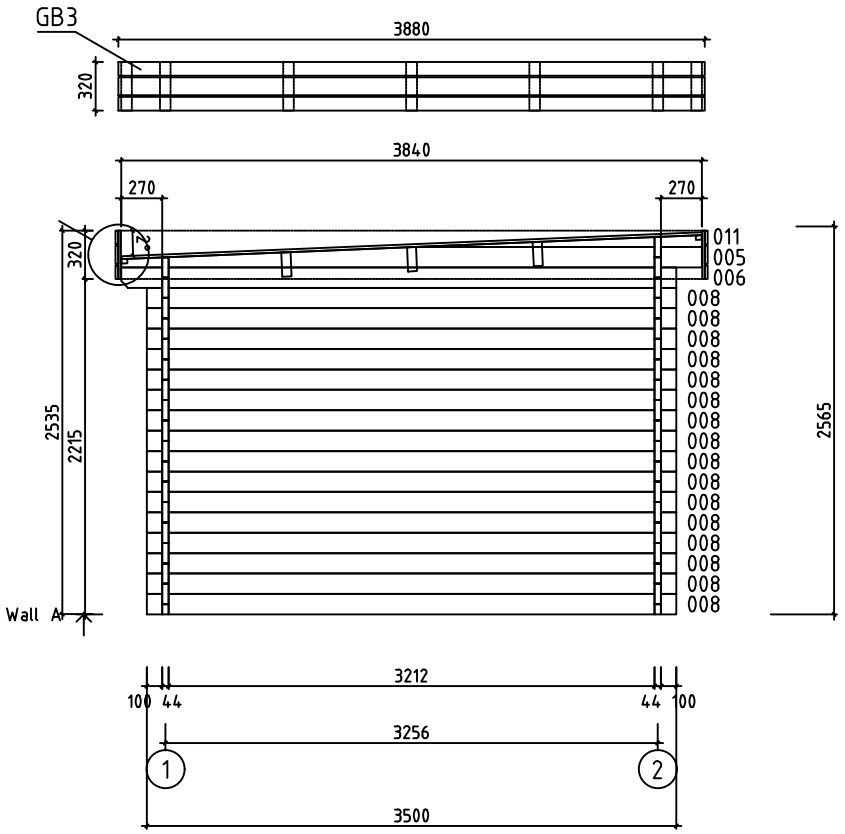

House	4474181	Sheet	4
Drawing	WALL A	Scale	1:50
Material	44x135	Date	05.01.2024
Drawer	RP	File	4474181.dwg

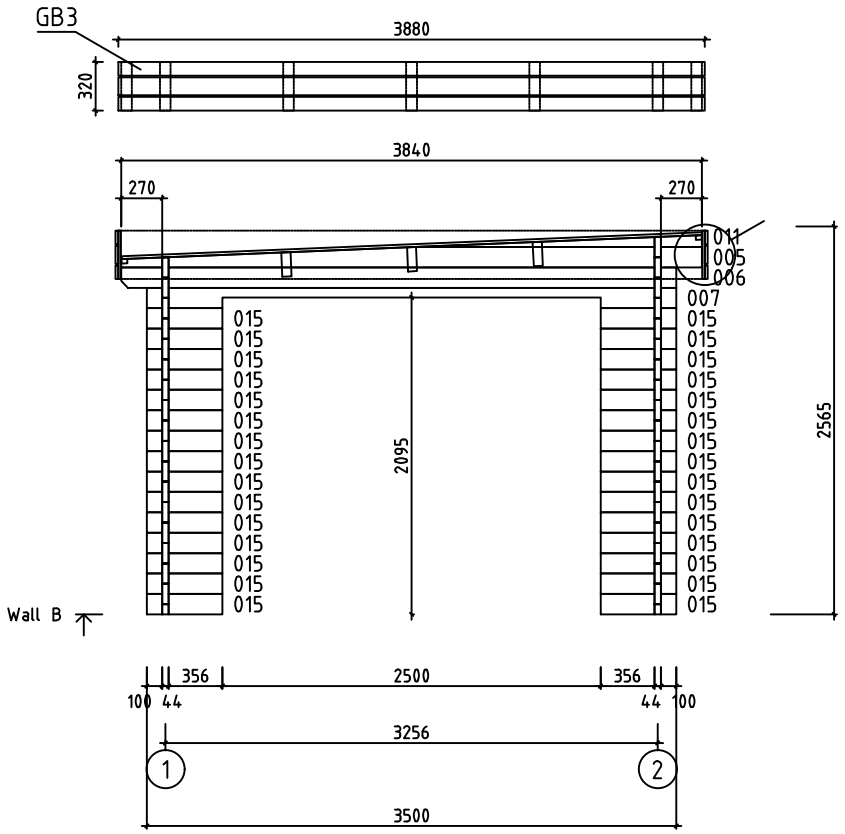

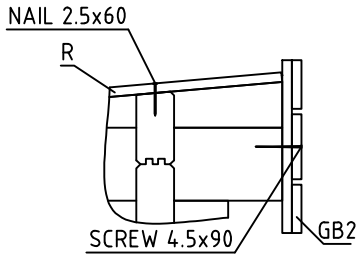

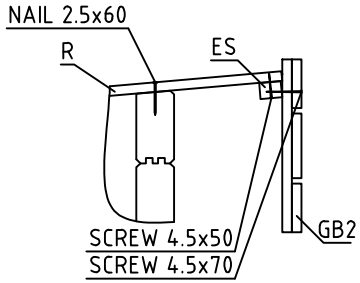

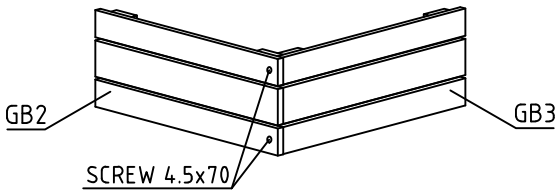

House	4474181	Sheet	5
Drawing	WALL B	Scale	1:50
Material	44x135	Date	05.01.2024
Drawer	RP	File	4474181.dwg

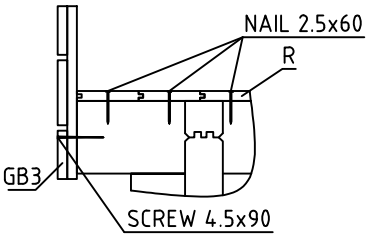

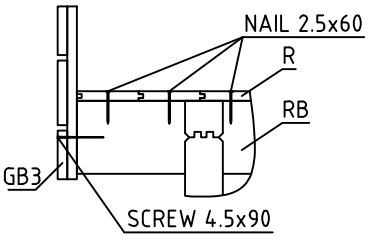

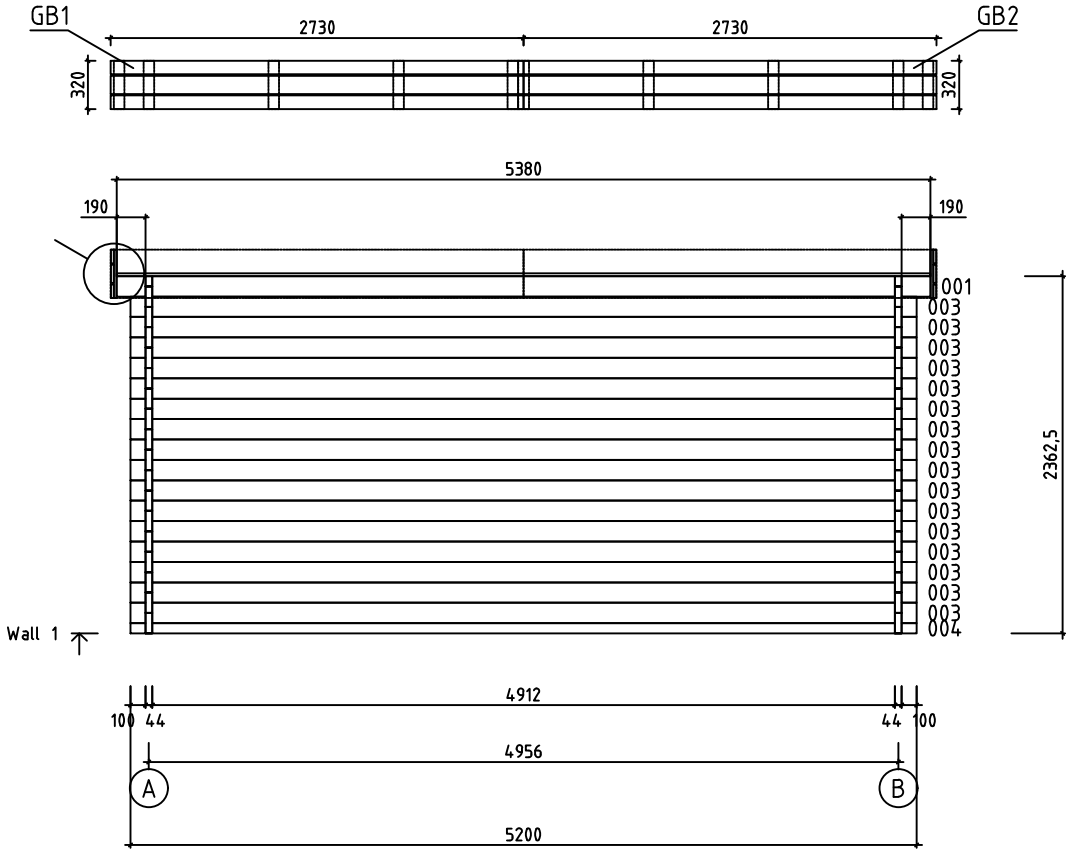

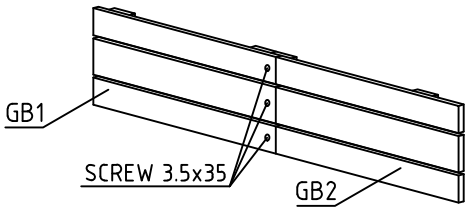

House	4474181	Sheet	6
Drawing	WALL 1	Scale	1:50
Material	44x135	Date	05.01.2024
Drawer	RP	File	4474181.dwg

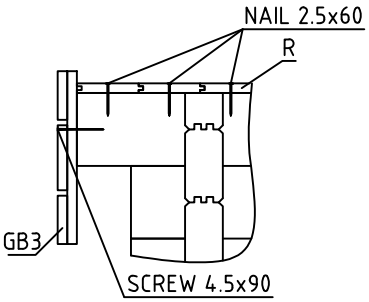

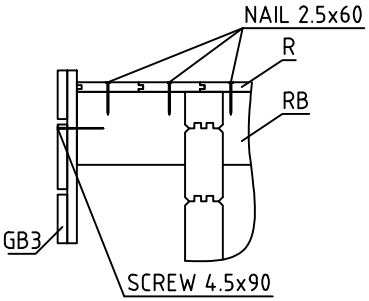

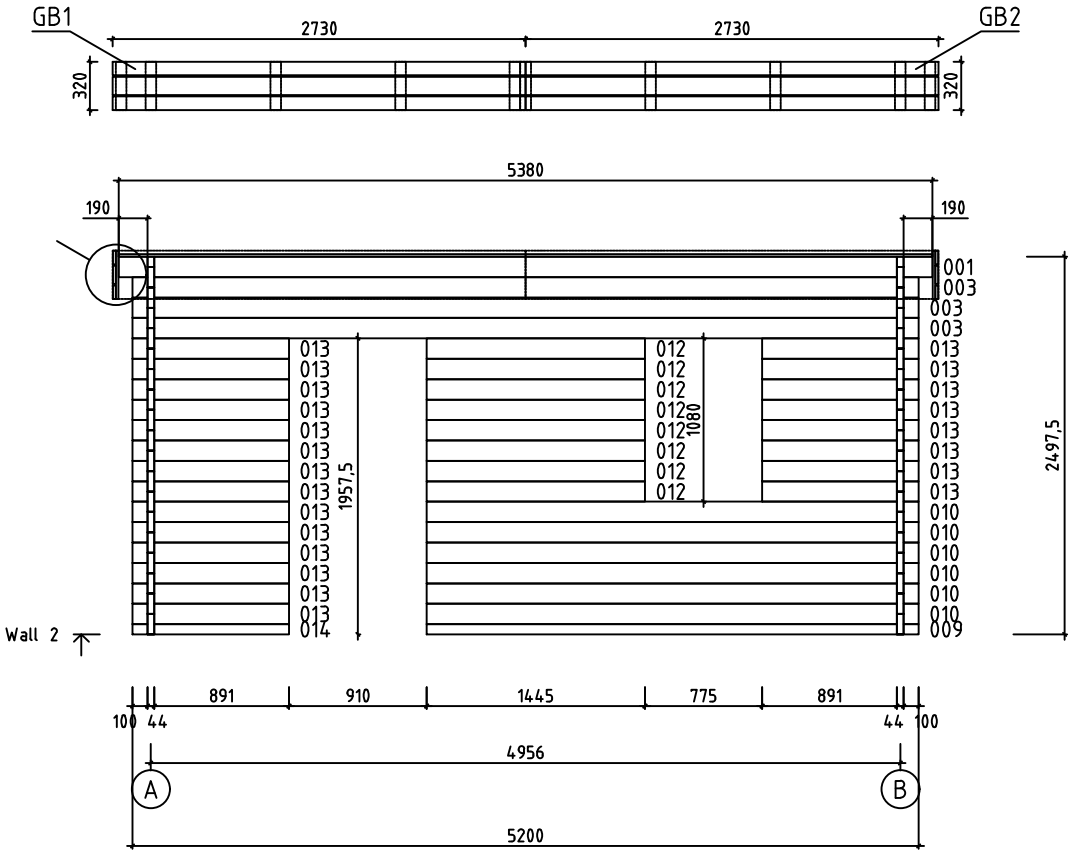

House	4474181	Sheet	7
Drawing	WALL 2	Scale	1:50
Material	44x135	Date	05.01.2024
Drawer	RP	File	4474181.dwg

Pos	Specification-Bestimmung-Spécification	PCS	Profile (mm)	L (mm)
001	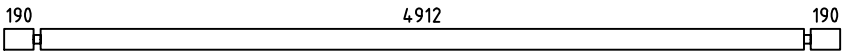	2	44x135	5380
002	SPARE BEAM-ERZATZBOHLE-MADRIER DE RÉSERVE 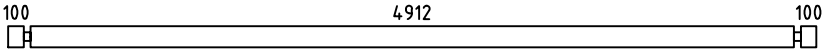	1	44x135	5200
003	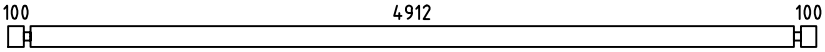	19	44x135	5200
004	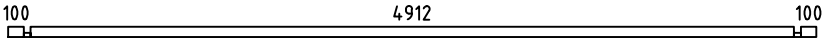	1	44x68	5200
007	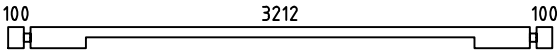	1	44x135	3500
008	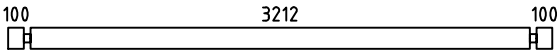	16	44x135	3500
009	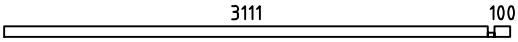	1	44x68	3255
010	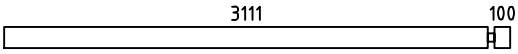	6	44x135	3255
012	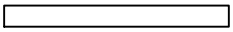	8	44x135	1445
013	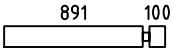	22	44x135	1035
014	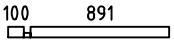	1	44x68	1035
015		30	44x135	500
WA-1 WB-1	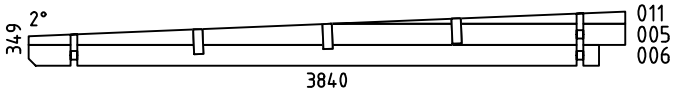	2	44x349	3840
HB	HIT BLOCK-SCHLAGHÖLZER-MADRIERS D´ASSEMBLAGE 	2	44x135	300
FS1	FIXING MECHANISM OF THE ELECTRIC MOTOR-BEFESTIGUNGSMECHANISMUS DES ELEKTROMOTORS-MADRIER DE FIXATION DU MOTEUR ÉLECTRIQUE 	1	45x90	3280
RB1	ROOFBEAMS-DACHBALKEN-SOLIVES DE PLAFOND 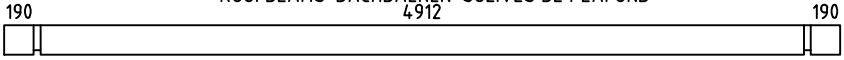	3	68x190	5380
R1	ROOFBOARD-DACHBRETT-VOLIGES or-oder-ou	48+1 63+1	18x114 18x88	3840
GB1	ASSEMBLY REQUIRED-MONTAGE ERFORDERLICH-ASSEMBLAGE REQUIS 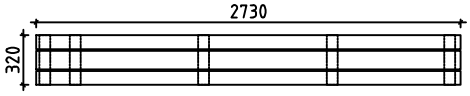	2	36x320	2730
GB2	ASSEMBLY REQUIRED-MONTAGE ERFORDERLICH-ASSEMBLAGE REQUIS 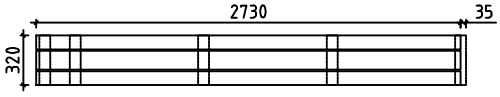	2	36x320	2730 +35
GB3	ASSEMBLY REQUIRED-MONTAGE ERFORDERLICH-ASSEMBLAGE REQUIS 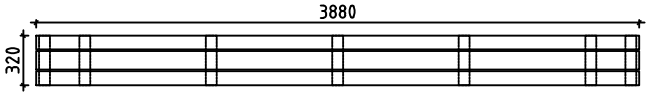	2	36x320	3880
ES1	EAVE SLAT-TRAUFENLEISTE-BAGUETTES POUR FIXER LES LATTES SOUS VOLIGES 	4	30x40	2455

House 4474181	Material	File 4474181.dwg	Sheet 9

Pos	Specification-Bestimmung-Spécification	PCS	Profile (mm)	L (mm)
ES2	EAVE SLAT-TRAUFENLEISTE-BAGUETTES POUR FIXER LES LATTES SOUS VOLIGES	4	30x40	190
SS1	STORM SLAT-STURMLEISTE -BAGUETTE DE TEMPETE TYPE 2	2	18x35	2390
SS2	STORM SLAT-STURMLEISTE -BAGUETTE DE TEMPETE TYPE 2	2	18x35	2290
LCM	CONNECTING METAL-VERBINDEN VON METALL-CONNECTEUR MÉTALLIQUE	2	45	135
	SCREWS-SCHRAUBEN-VISSER FOR-FÜR-POUR SS1, SS2	8	M8	90
	WASHER-SCHEIBE-RONDELLE FOR-FÜR-POUR SS1, SS2	8	M8	
	NUT-NUSS-ÉCROU FOR-FÜR-POUR SS1, SS2	8	M8	
	NAIL-NAGEL-CLOUS FOR-FÜR-POUR R1	320	ϕ2.5	60
	SCREWS-SCHRAUBEN-VIS FOR-FÜR-POUR LCM, GB1, GB2, GB3	228	ϕ3.5	35
	SCREWS-SCHRAUBEN-VIS FOR-FÜR-POUR ES1, ES2, L1, L2	30	ϕ4.5	50
	SCREWS-SCHRAUBEN-VIS FOR-FÜR-POUR GB1, GB2, GB3	20	ϕ4.5	70
	SCREWS-SCHRAUBEN-VIS FOR-FÜR-POUR FS1, P1, P2, P3, P4 GB1, GB2, GB3	50	ϕ4.5	90
	SCREWS-SCHRAUBEN-VIS FOR-FÜR-POUR WA-1, WB-1, RB1	20	ϕ6.0	160
	FRAME AROUND ENTRANCE-RAHMEN UM DEN EINGANG-CADRE AUTOUR DE L'ENTRÉE	1	2490	2045
	DOOR-TÜR-PORTE (left-links-gauche) AST_ISO_PL V	1	900	1920
		1		
		1		

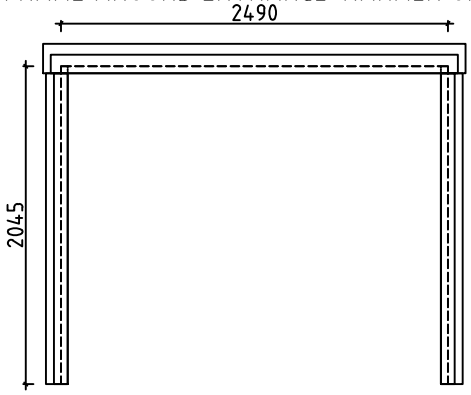

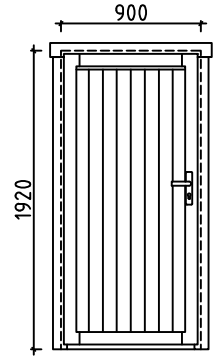

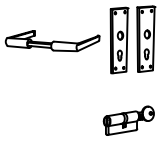

House 4474181	Material	File 4474181.dwg	Sheet 10

Pos	Specification-Bestimmung-Spécification	PCS	Profile (mm)	L (mm)
	WINDOW-FENSTER-FENÉTRE (right-rechts-droit) AST_PRE P	1	765	1040
	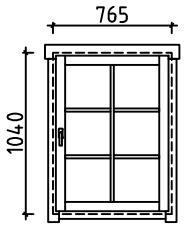			
		1		
		1		
		1		

House 4474181	Material	File 4474181.dwg	Sheet 11

Pos	Specification-Bestimmung-Spécification	PCS	Profile (mm)	L (mm)
P1	BEAM-BALKEN-POUTRE	1	43x190	2720
P2	BEAM-BALKEN-POUTRE	2	43x140	2000
P3	BEAM-BALKEN-POUTRE	1	45x46	2400
P4	BEAM-BALKEN-POUTRE	2	45x46	2045
L1	BOARD-BRETT-PLANCHE	1	18x120	2620
L2	BOARD-BRETT-PLANCHE	2	18x90	2000
		1	107x2190	2720

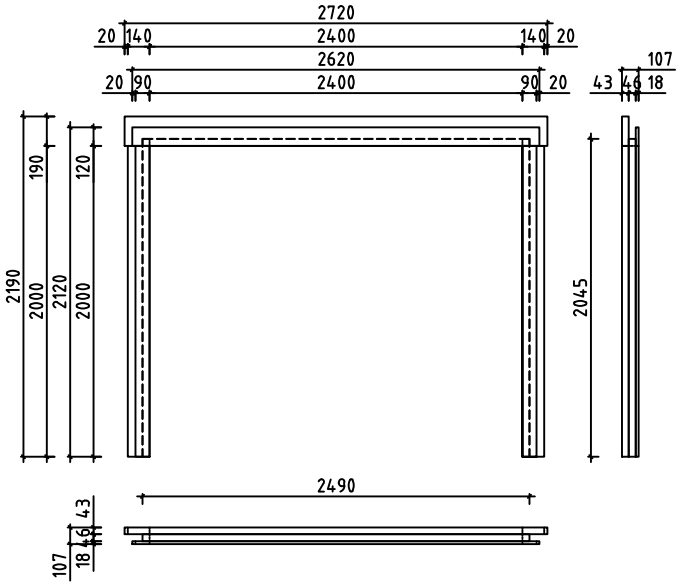

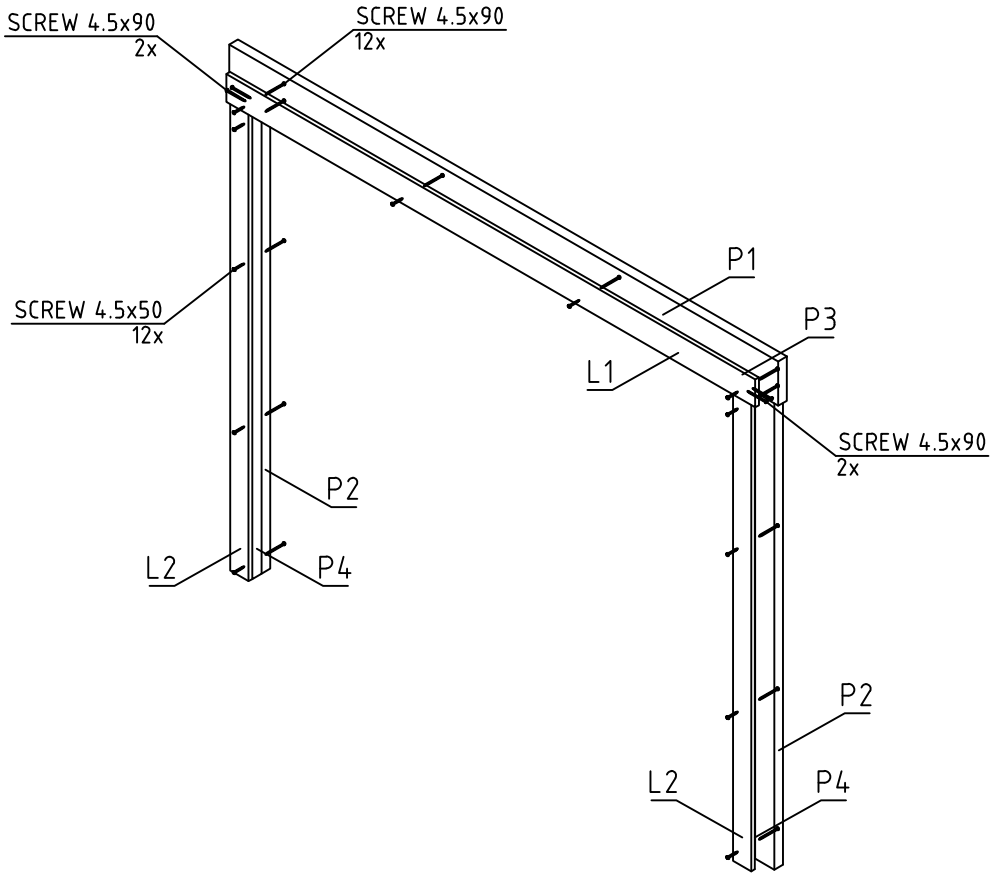

House 4474181	Material	File 4474181.dwg	Sheet 12

Pos	Assembly Instructions-Montageanleitungen-Instructions de Montage	PCS	Profile (mm)	L (mm)
L1	BOARD-BRETT-PLANCHE	4	18x120	2730
L2	BOARD-BRETT-PLANCHE	8	18x90	2730
L3	BOARD-BRETT-PLANCHE	2	18x120	3880
L4	BOARD-BRETT-PLANCHE	4	18x90	3880
L5	BOARD-BRETT-PLANCHE	34	18x70	320
GB1		2	36x320	2730

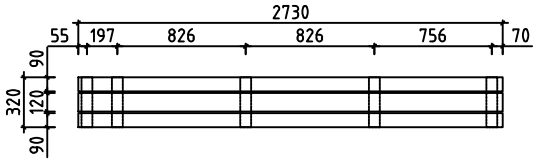

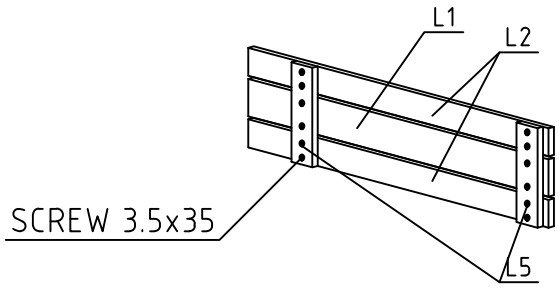

GB2		2	36x320	2730 +35

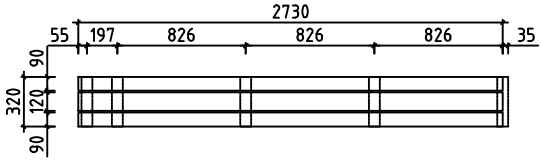

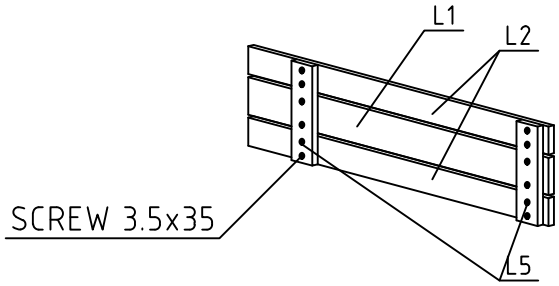

GB3		2	36x320	3880

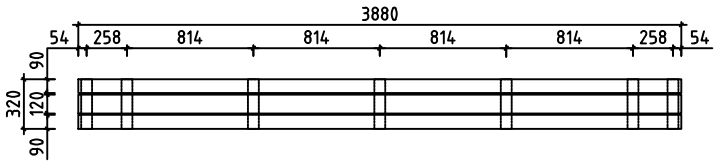

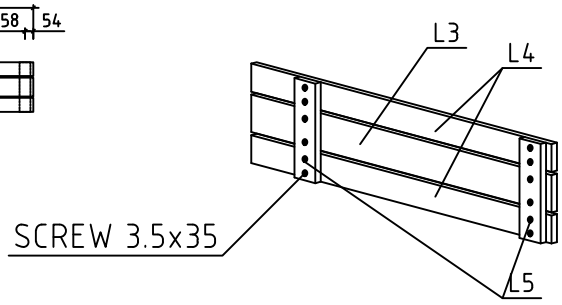

#001	1,2	5380	2
#002		5200	1
#003	1,2	5200	19
#004	1	5200	1
#005	A,B	3840	2
#006	A,B	3670	2
#007	B	3500	1
#008	A	3500	16
#009	2	3255	1
#010	2	3255	6
#011	A,B	1898	2
#012	2	1445	8
#013	2	1035	22
#014	2	1035	1
#015	B	500	30