Camping Barrel 330, Ø210/28

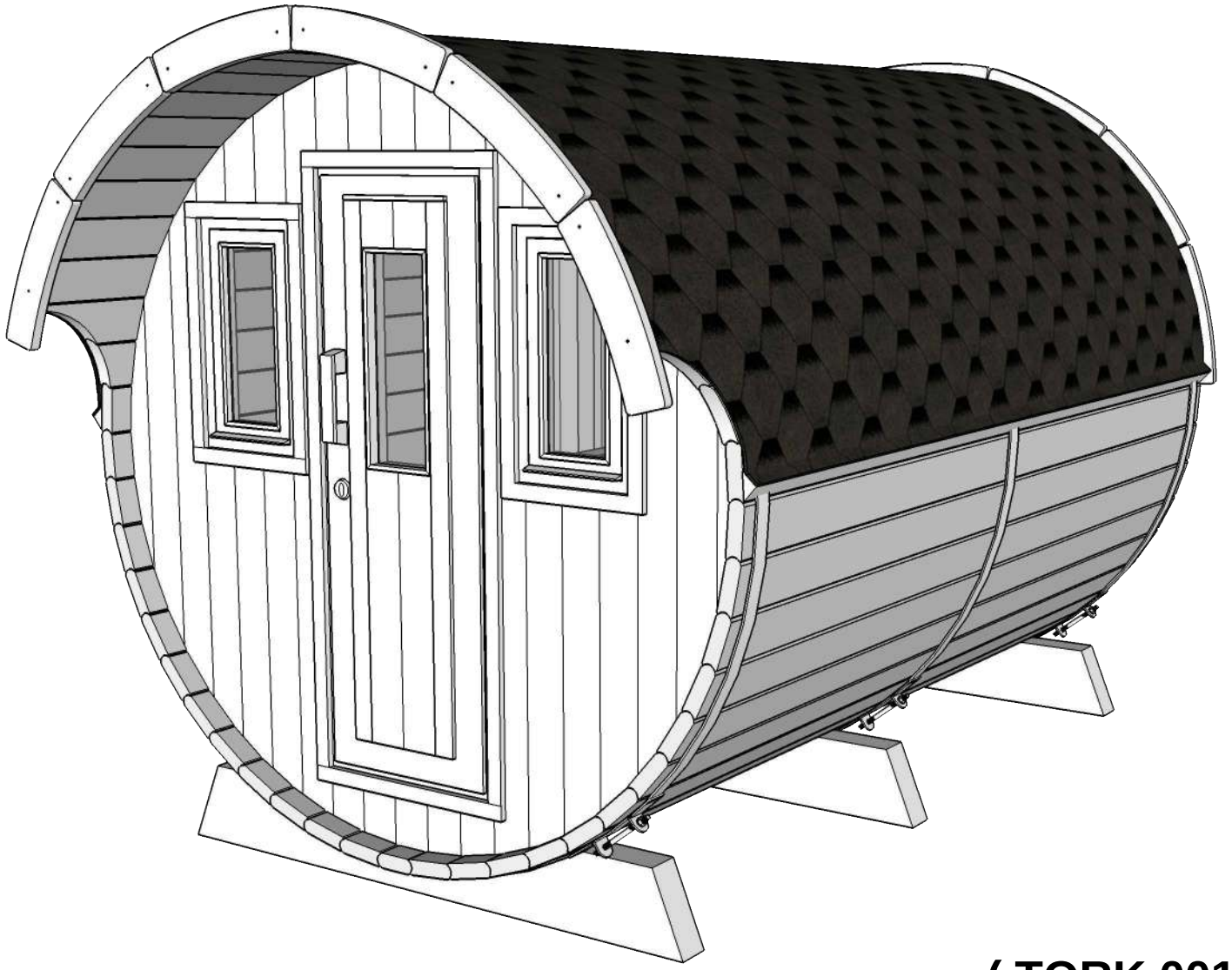

(TORK 001)

Camping Barrel 330, D 210

Details list nr.1

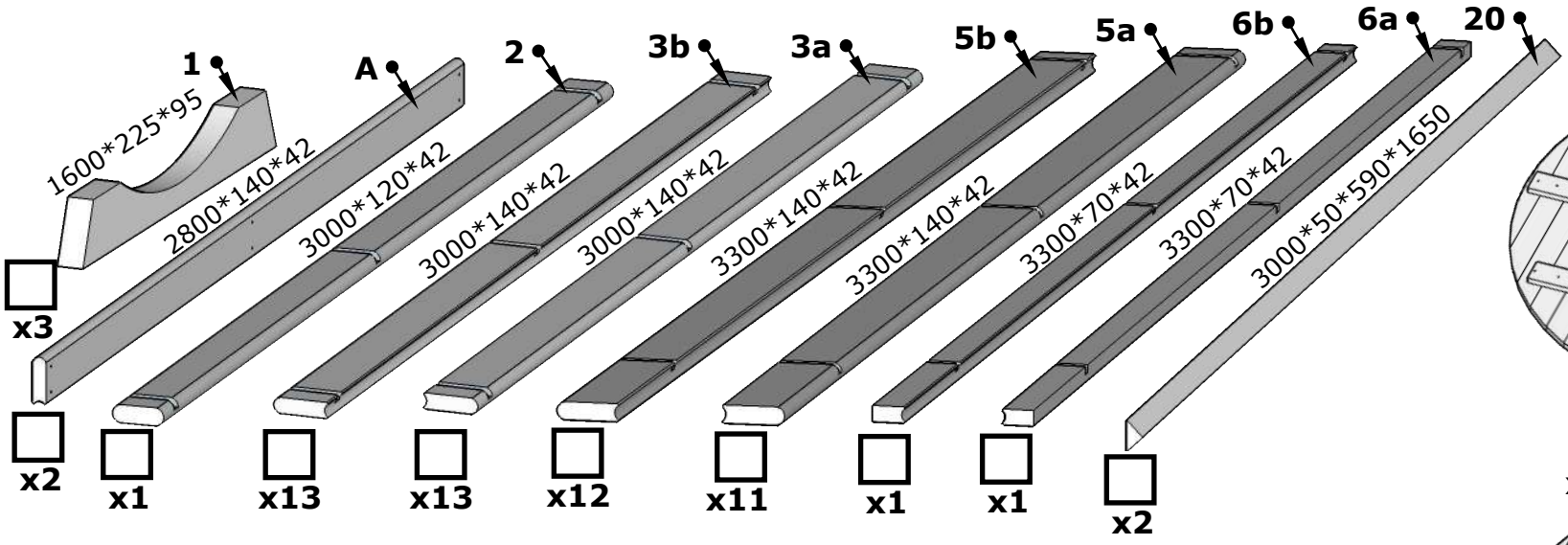

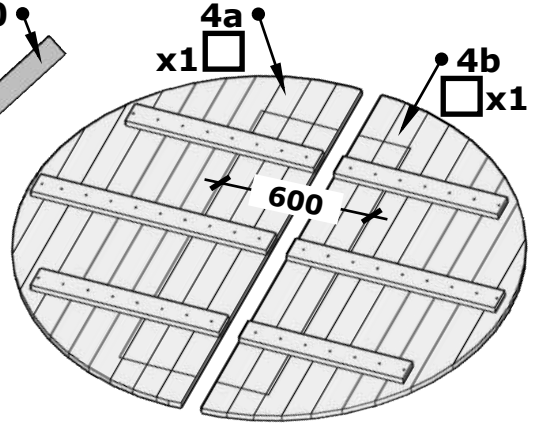

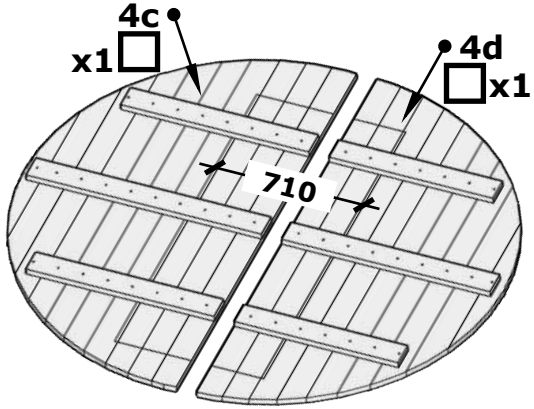

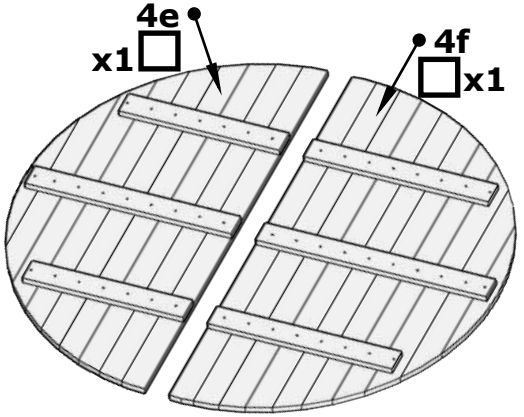

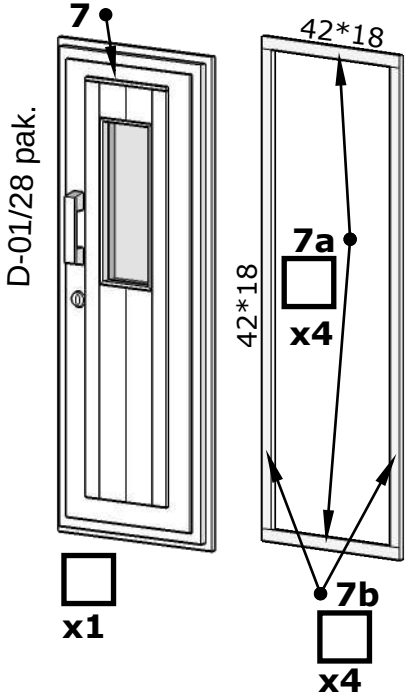

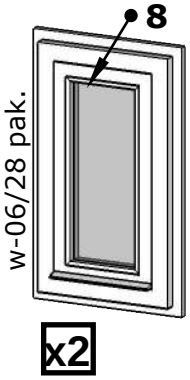

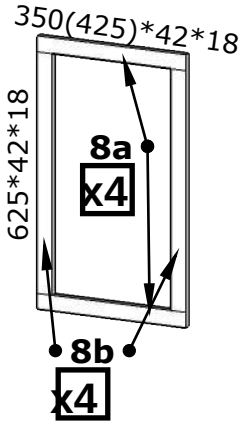

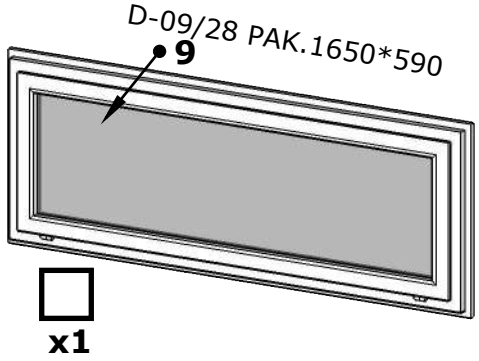

NB! Windows size and quantity is optional!

Camping Barrel 330, D 210

Details list nr.2

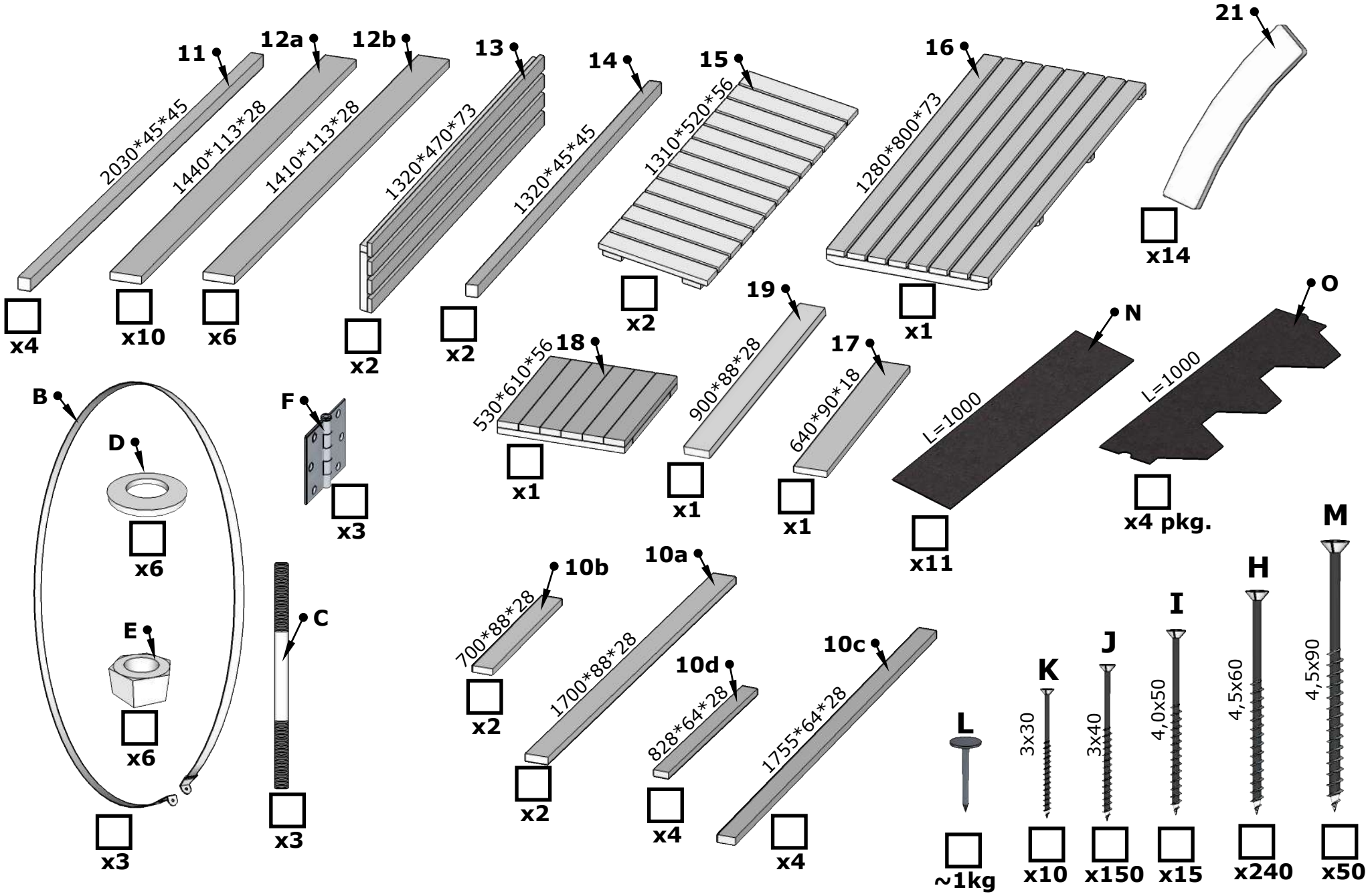

Camping 330, Ø210



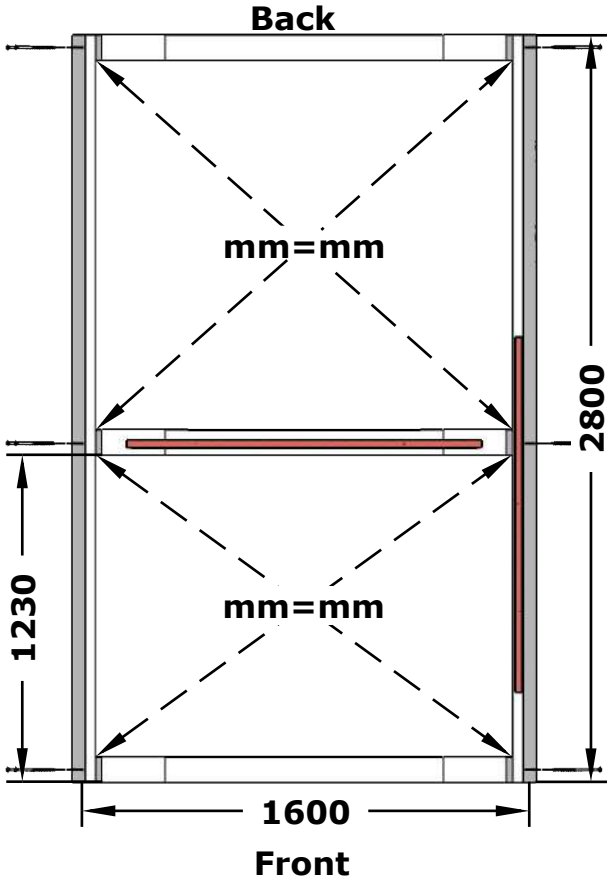

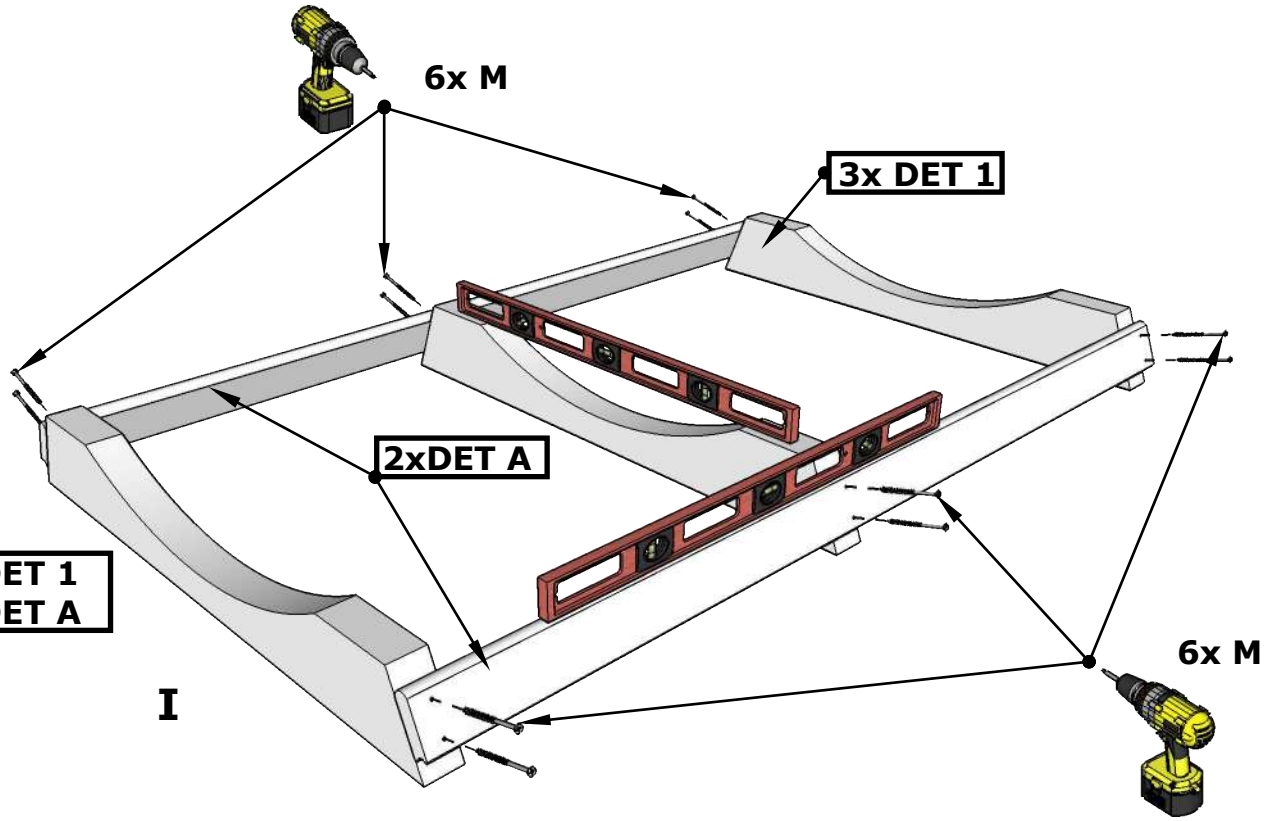

I

1.

Camping 330, Ø210



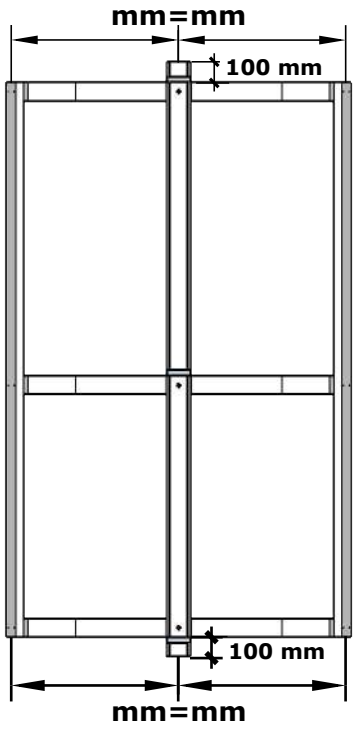

4 x DET 3a
4 x DET 3b

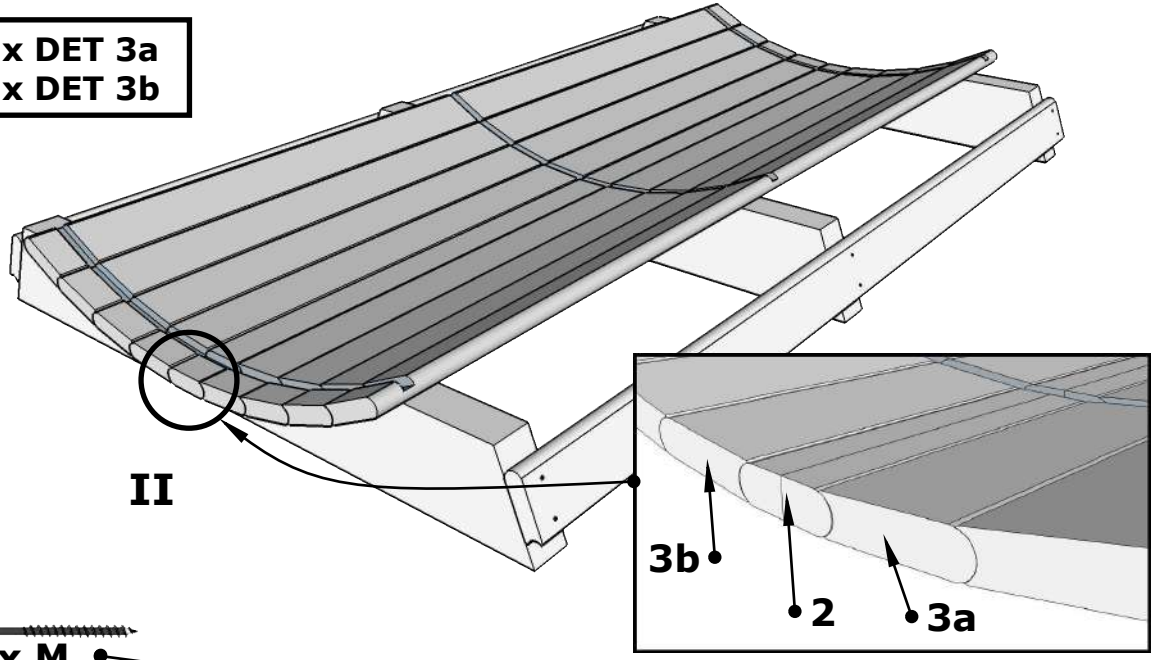

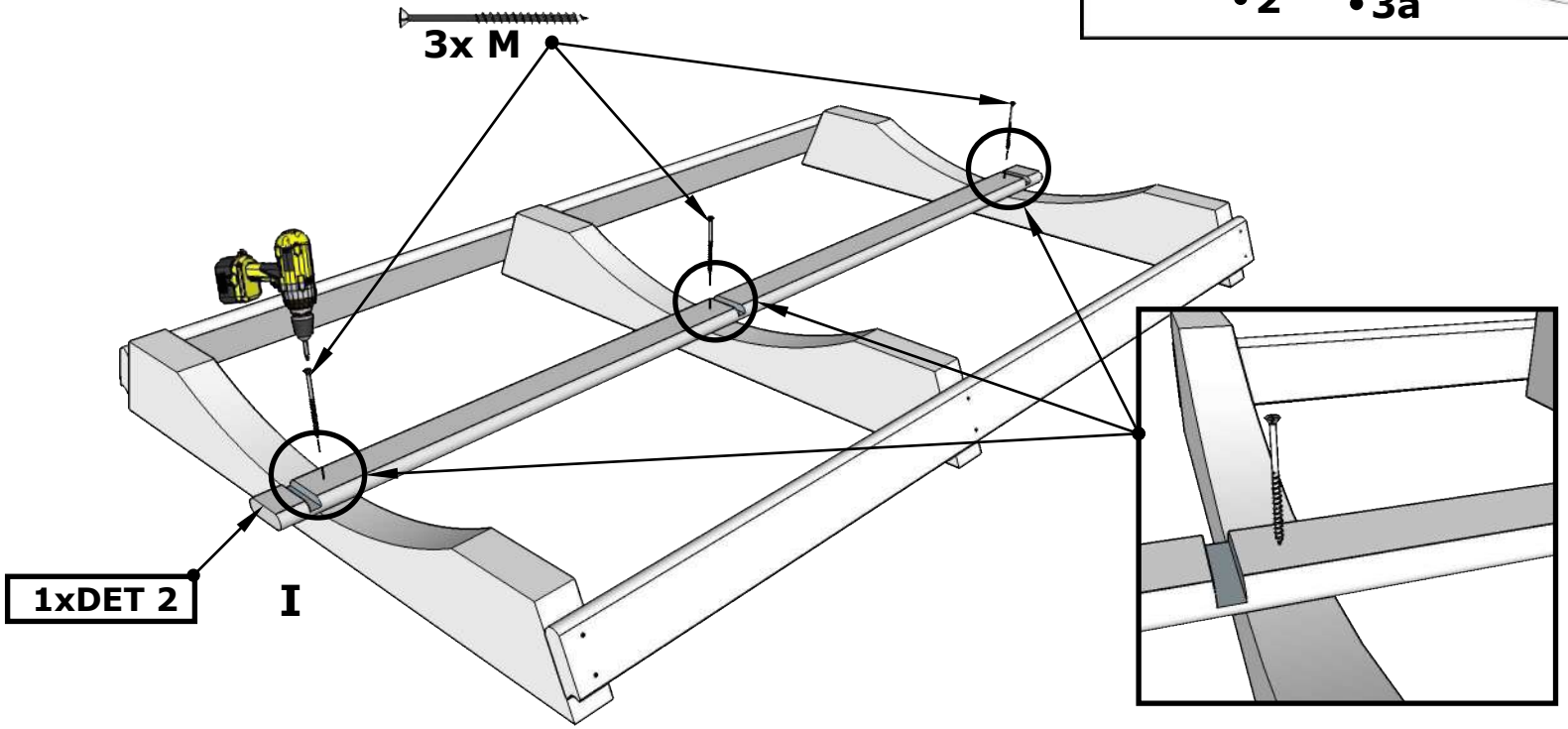

2.

Camping 330, Ø210





24x M

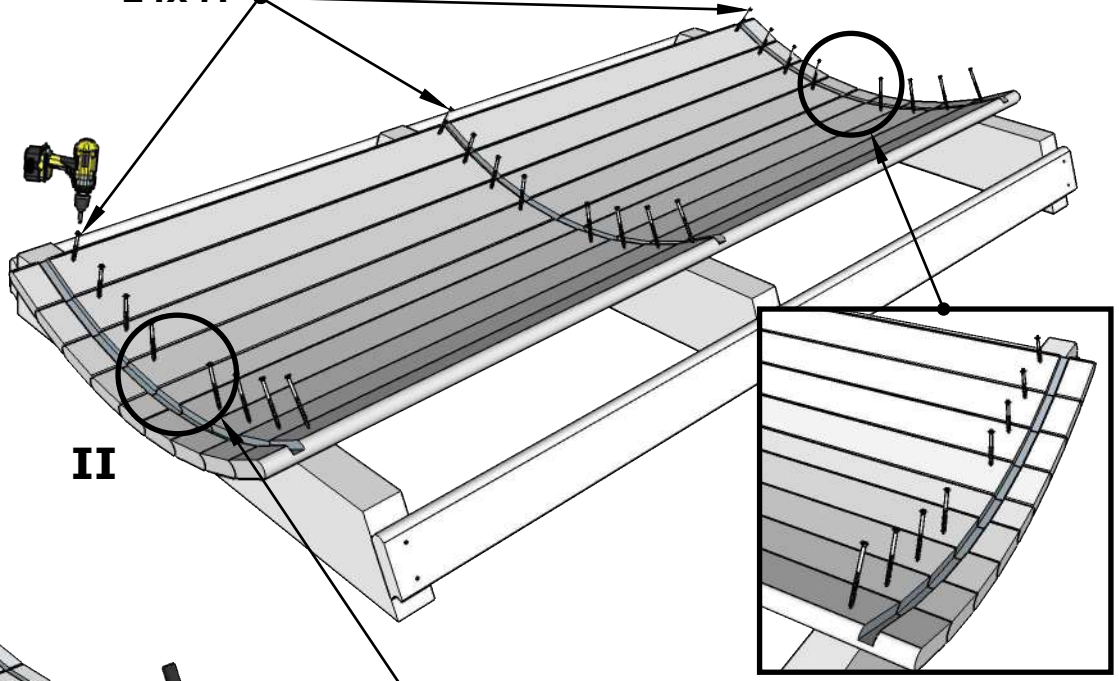

II

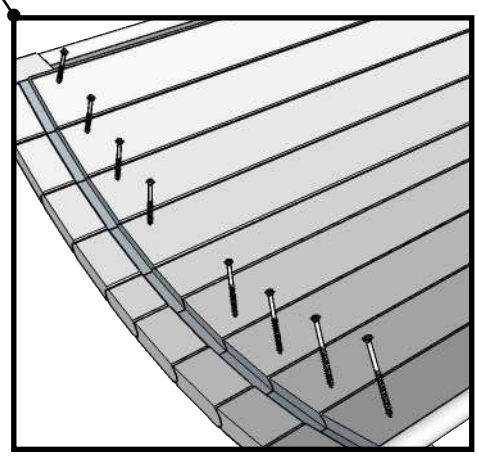

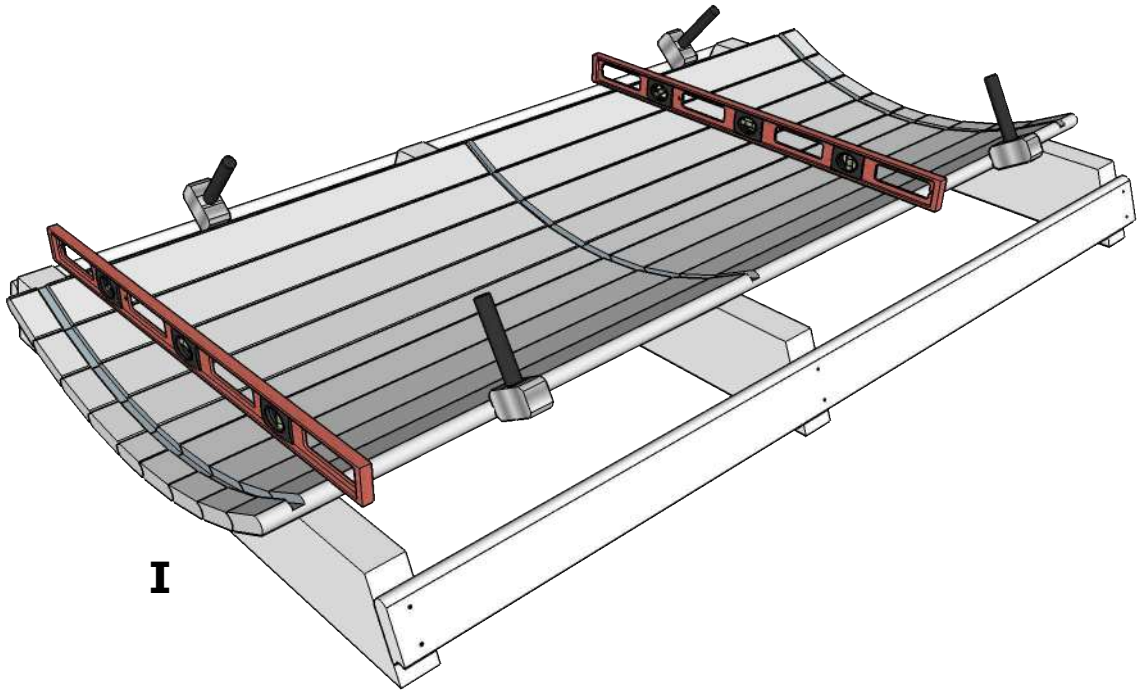

I

3.

Camping 330, Ø210



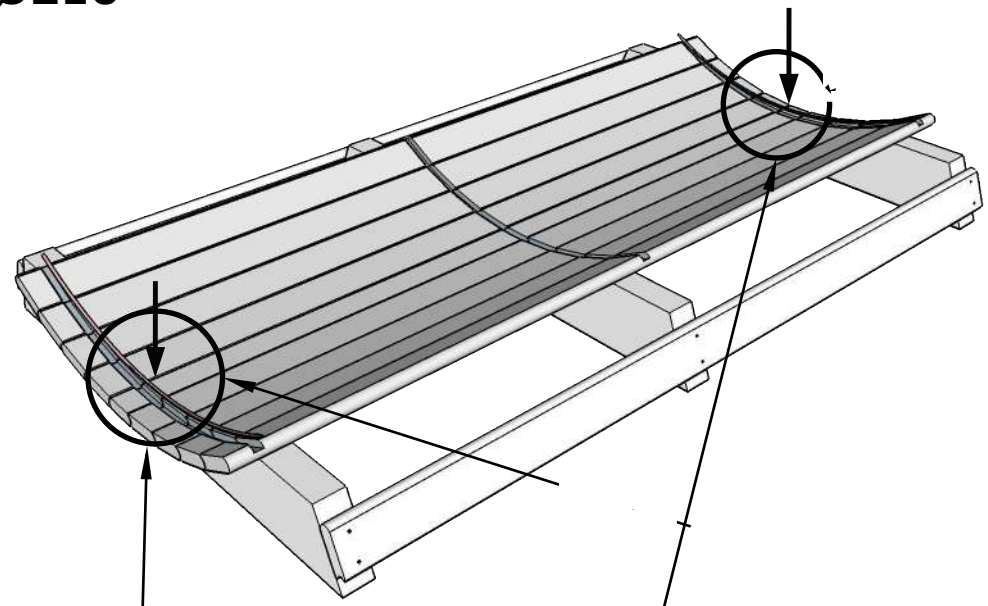

Drill 4 holes
in DET 2 Ø10 mm

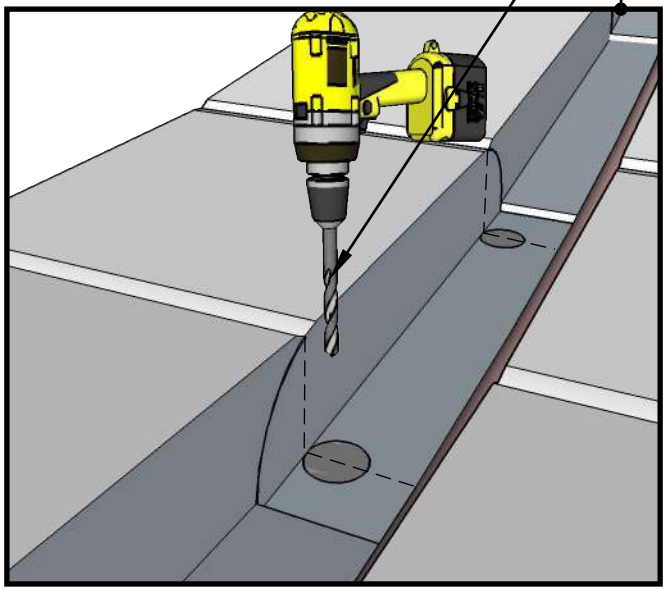

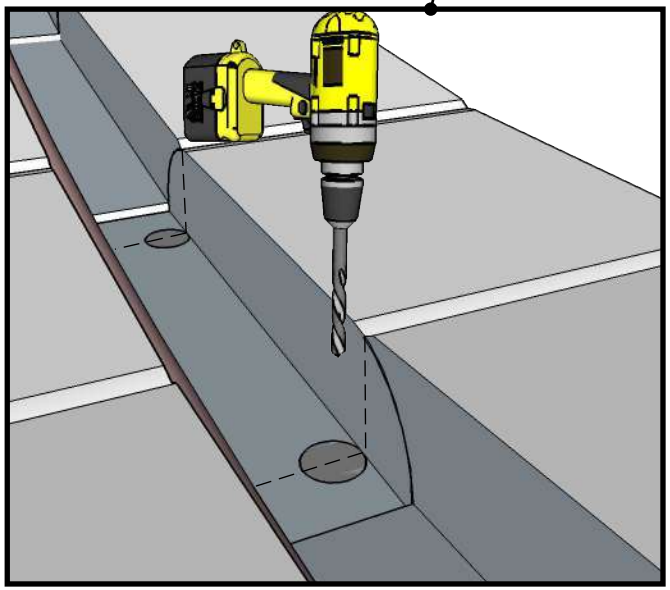

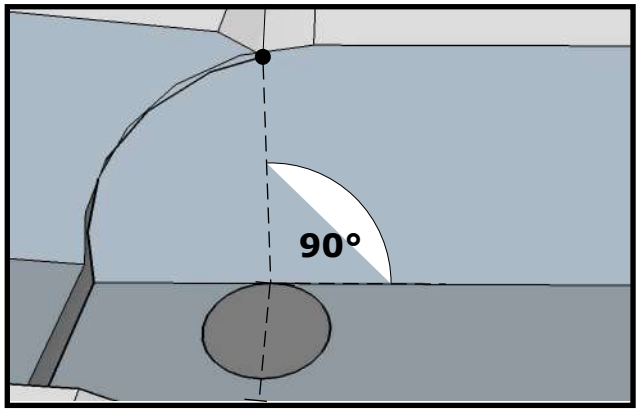

3A.

Camping 330, Ø210



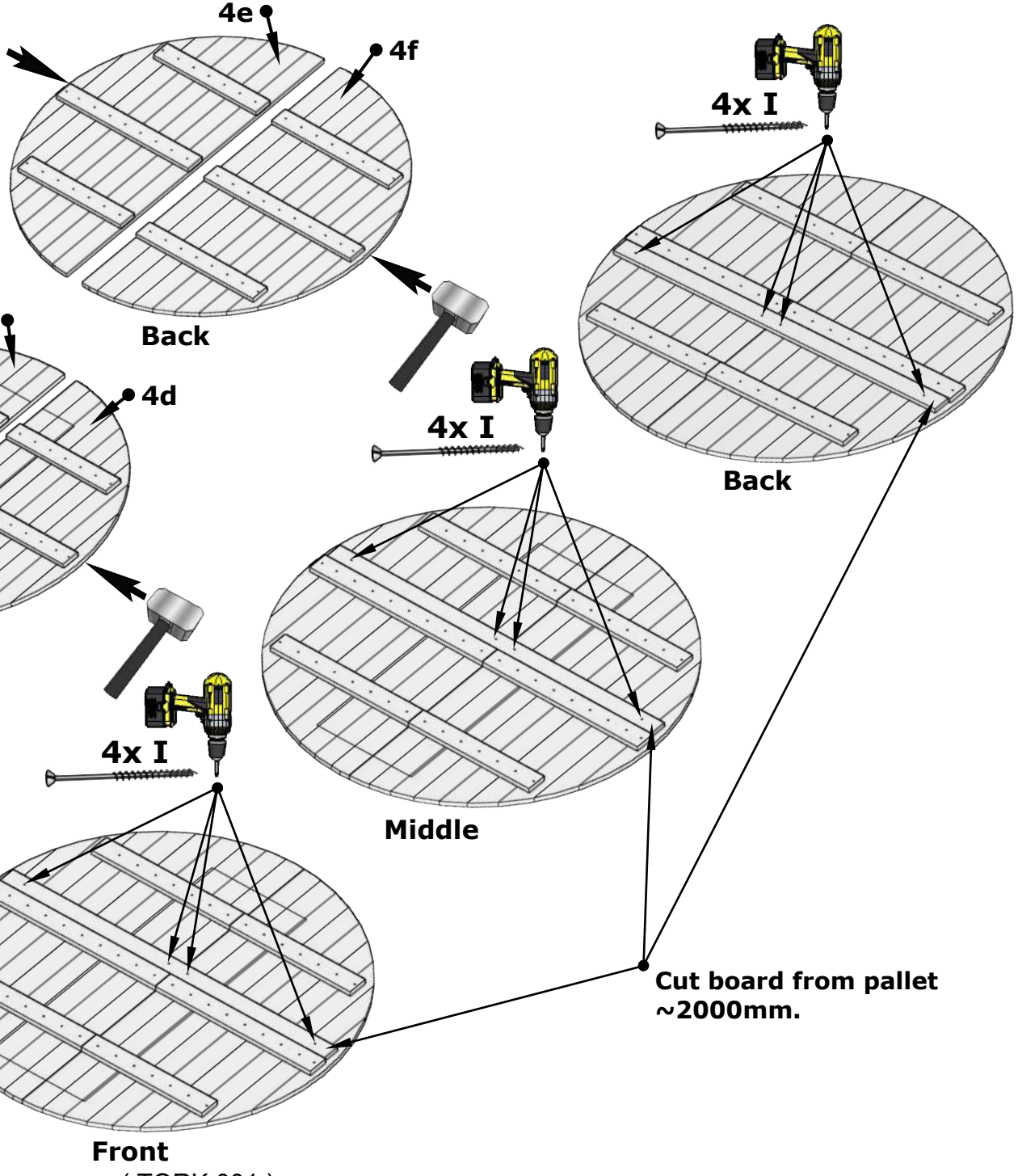

4.

(TORK 001)

Camping 330, Ø210



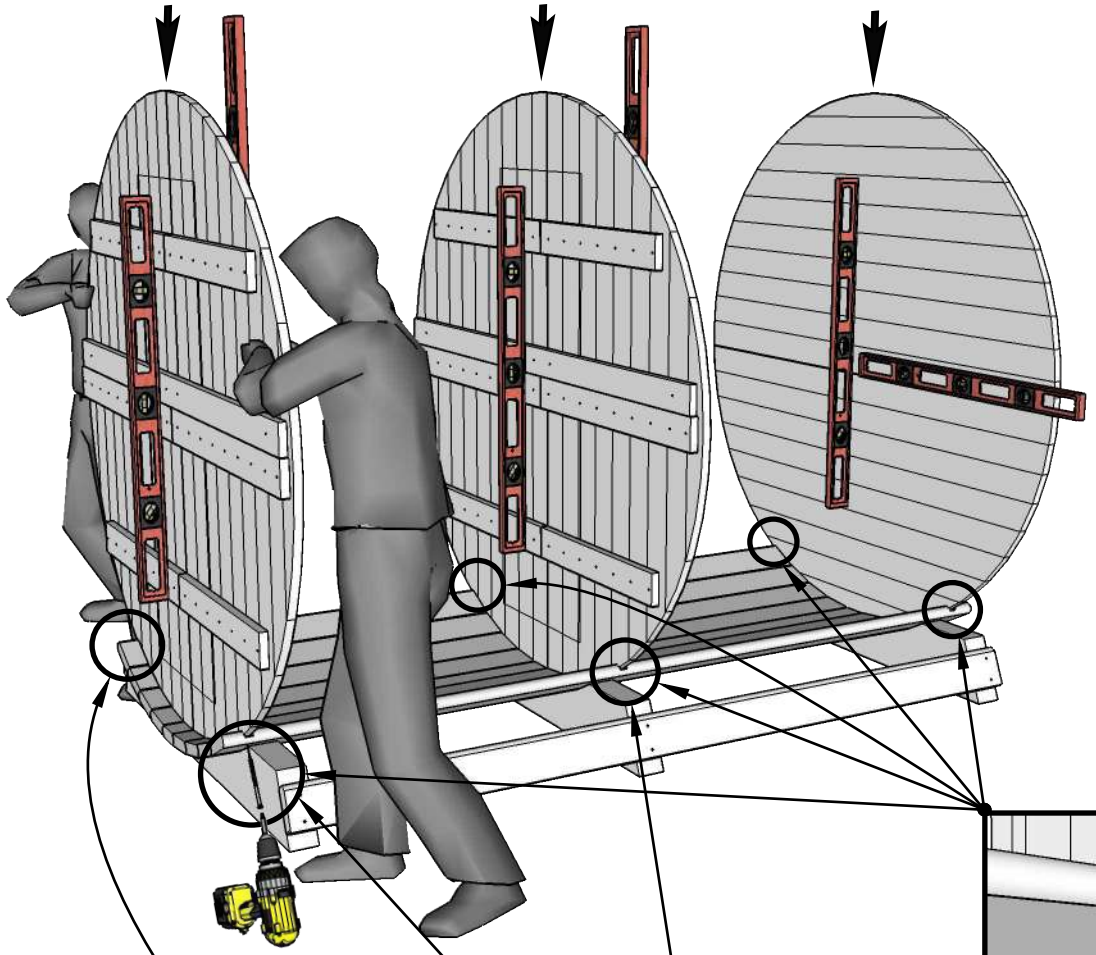

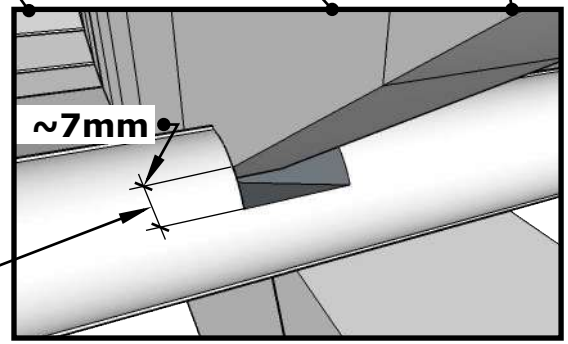

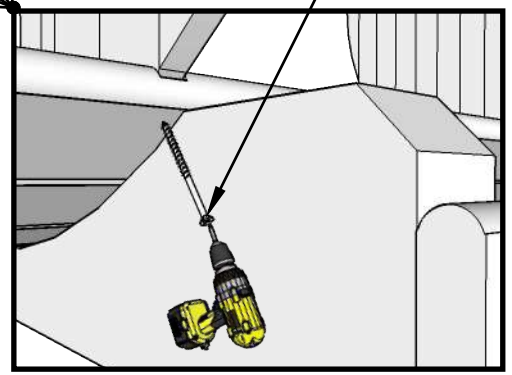

NB! Don´t leave space if using thermo wood

5.

Camping 330, Ø210



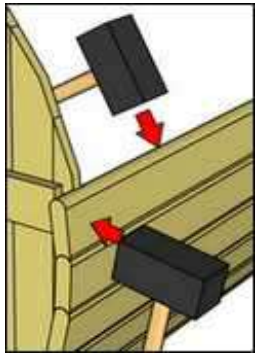

Watch Page 6A

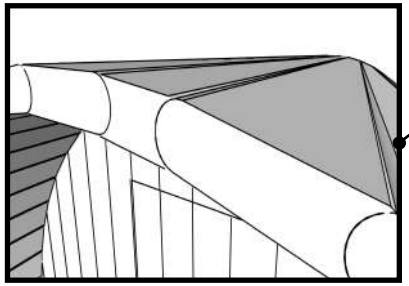

12x DET 5b
11x DET 5a

20xH

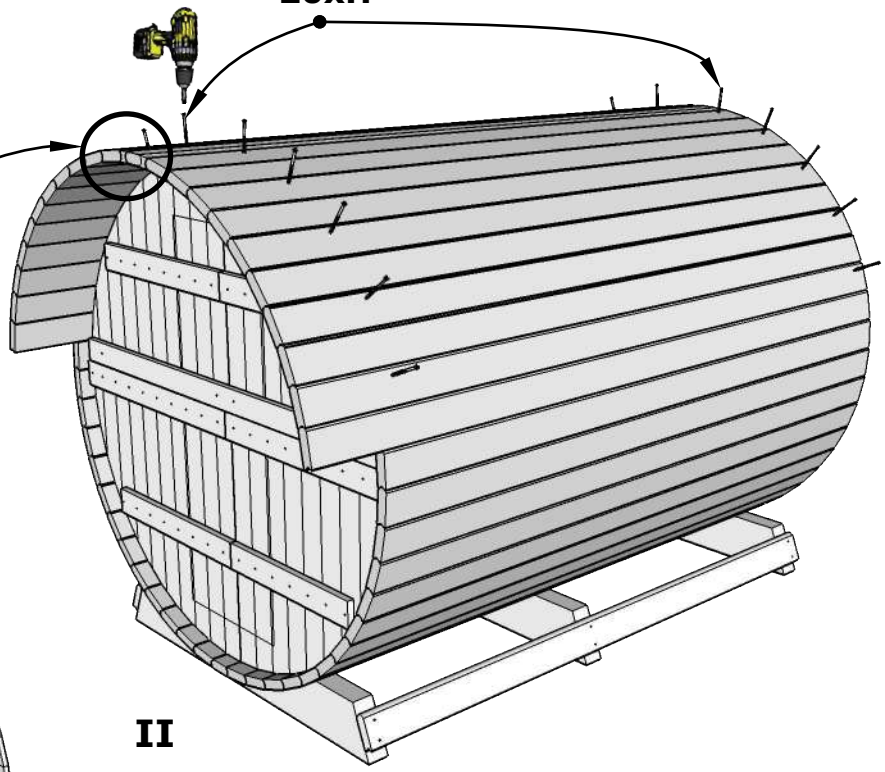

II

18xH

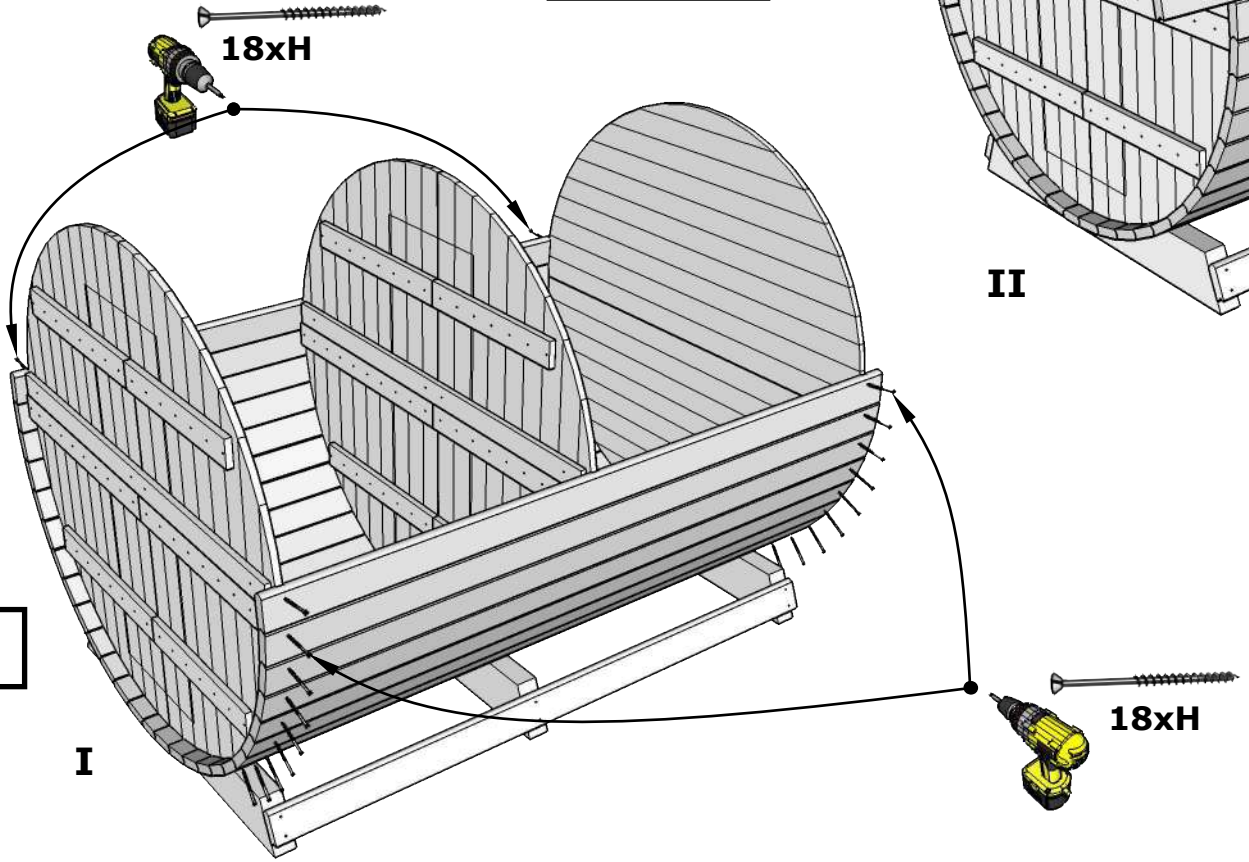

9x DET 3a
9x DET 3b

I

18xH

6.

Camping 330, Ø210



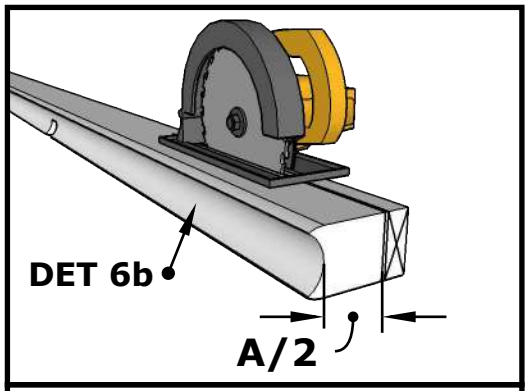

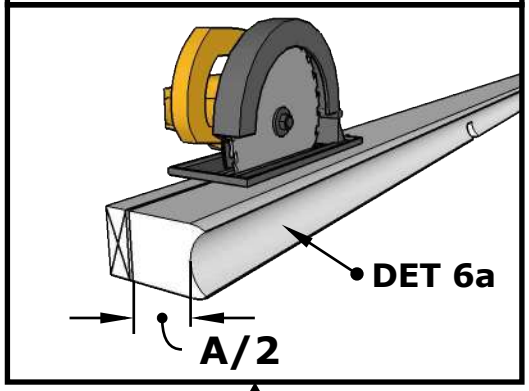

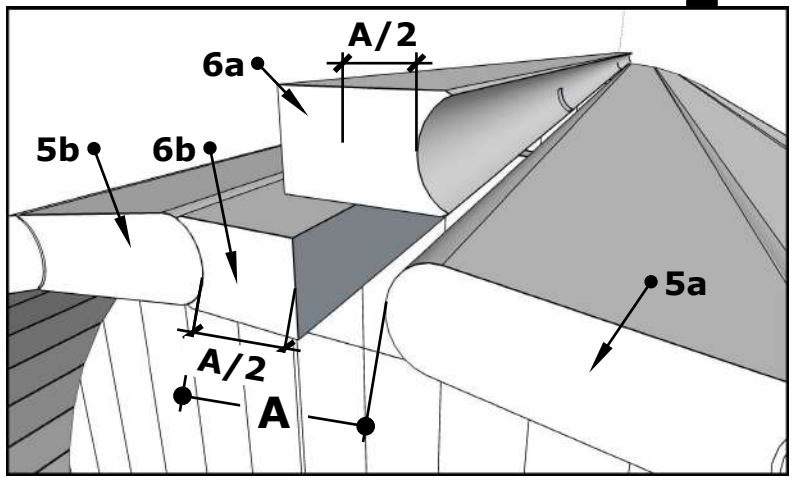



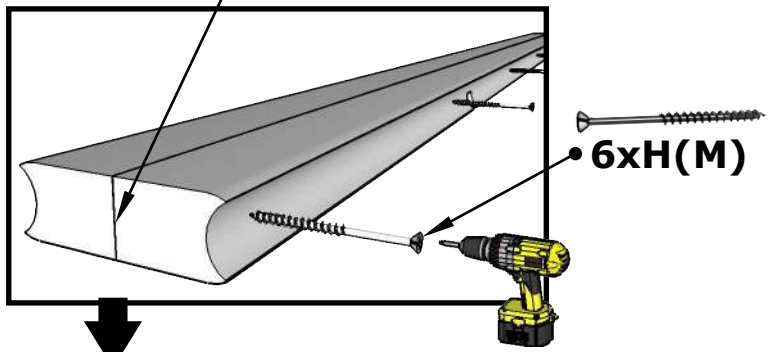

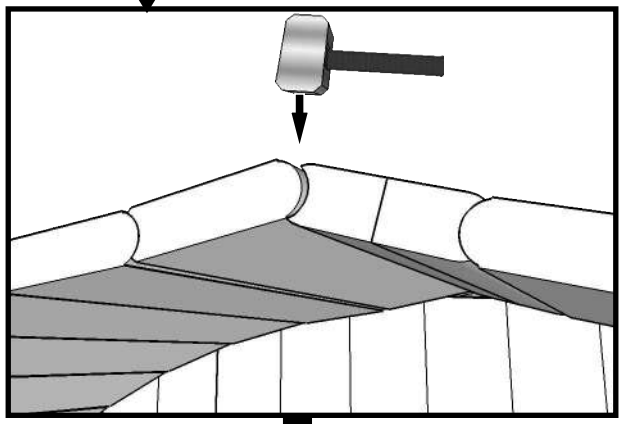

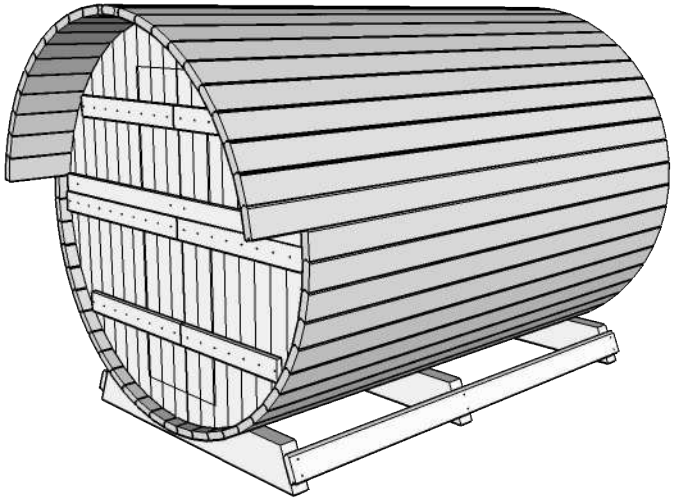

6A.

Camping 330, Ø210



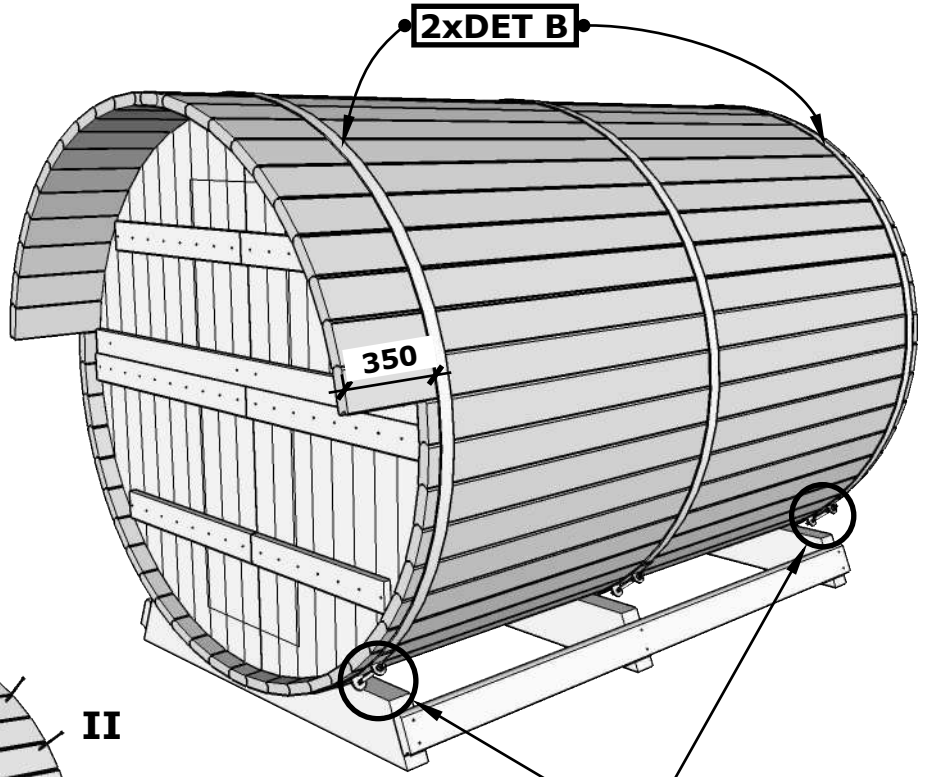

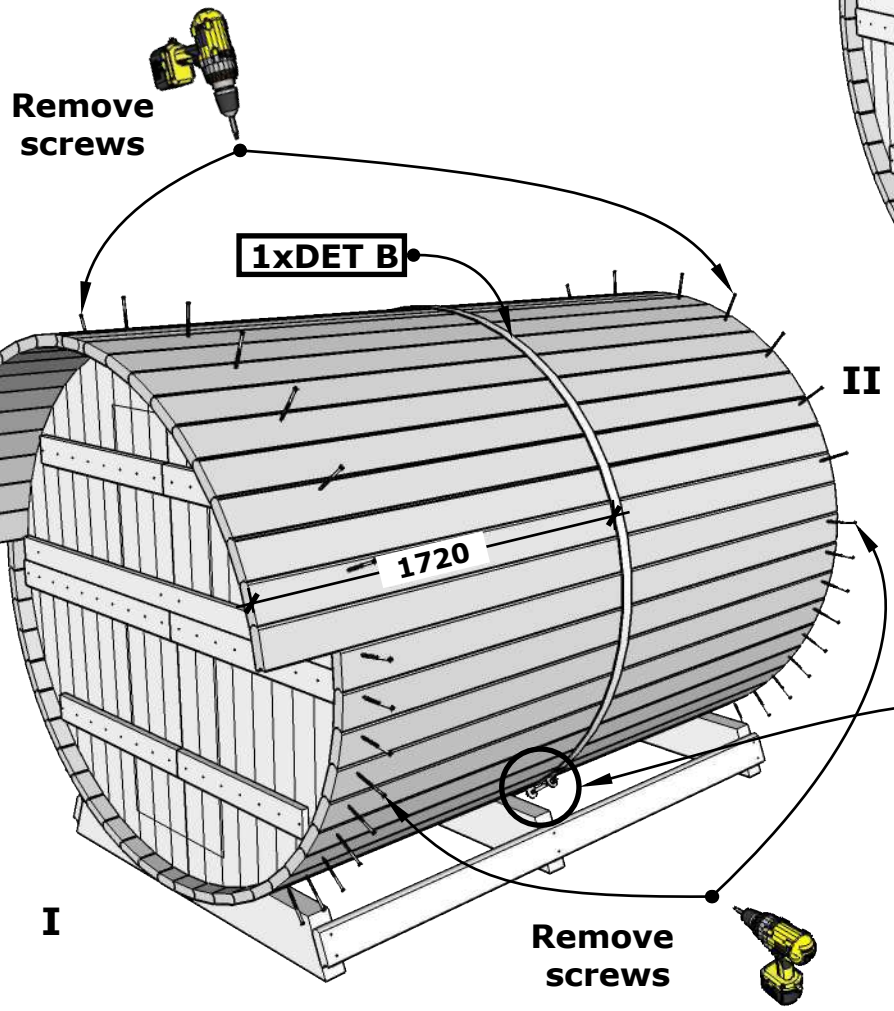

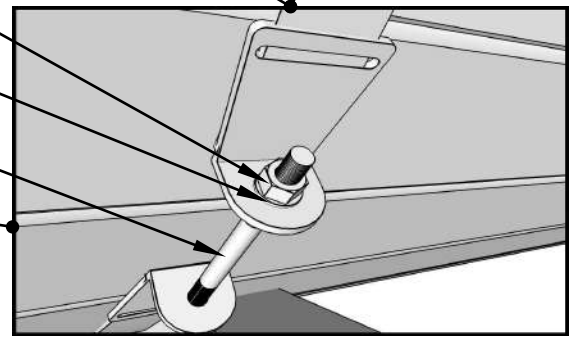



NB! Don´t remove screws, if using thermo wood!

7.

Camping 330, Ø210



NB! Window size depending on your model.

NB ! add 10 mm.outer dimension windows and door

NB! Use waterlevel.



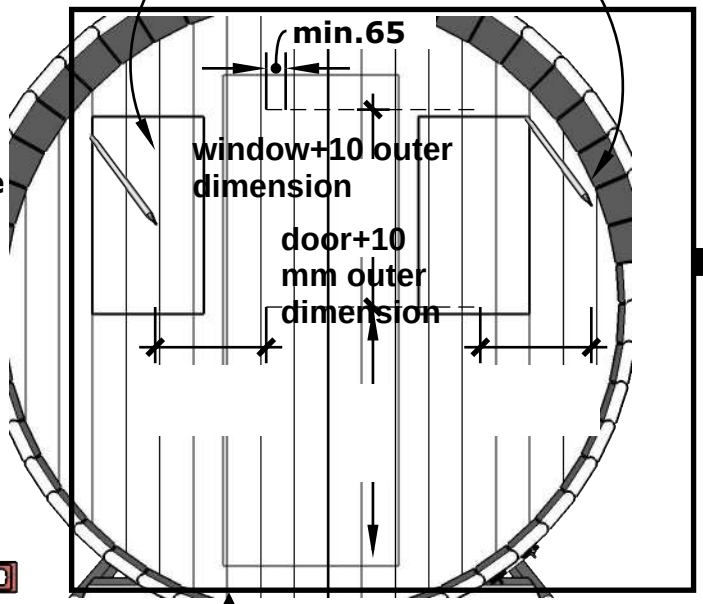

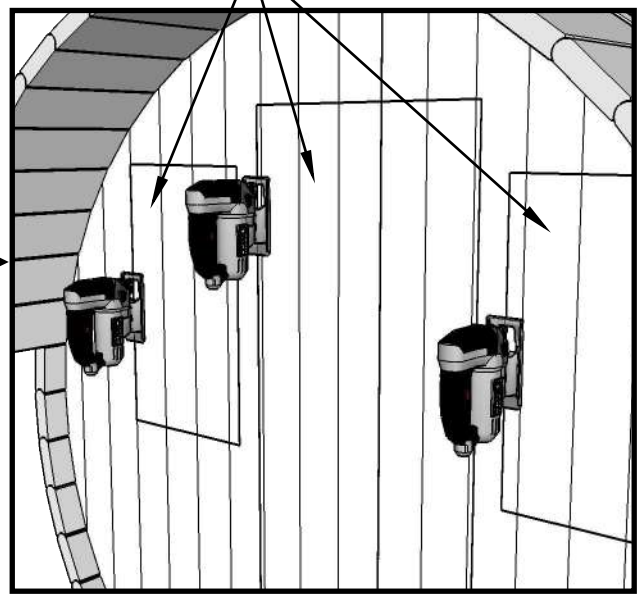

II

Remove all brackets

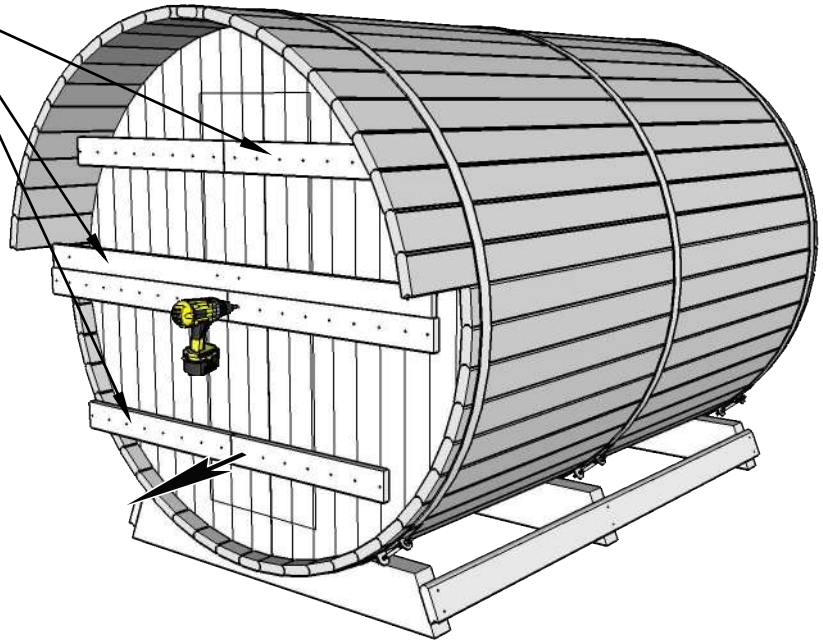

I

Remove all bracket

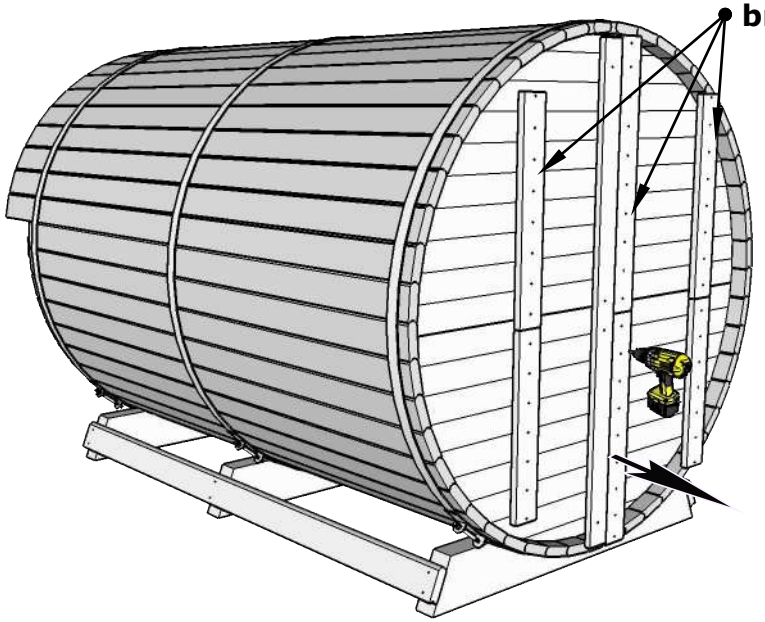

8.

Camping 330, Ø210



NB! Use waterlevel.



Cut out.

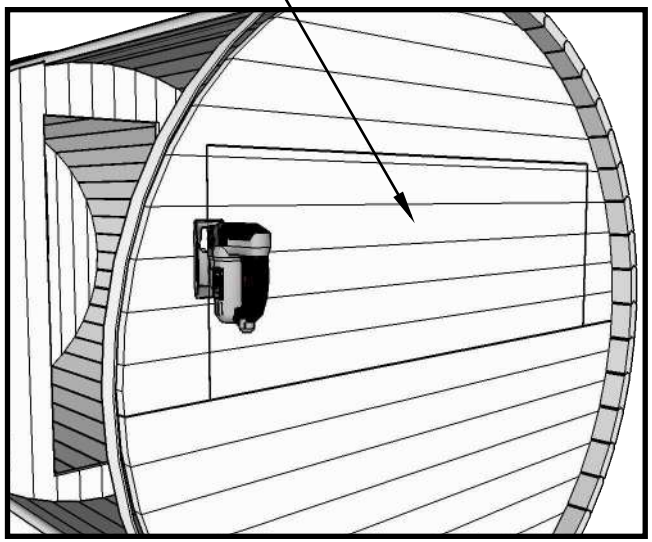

III

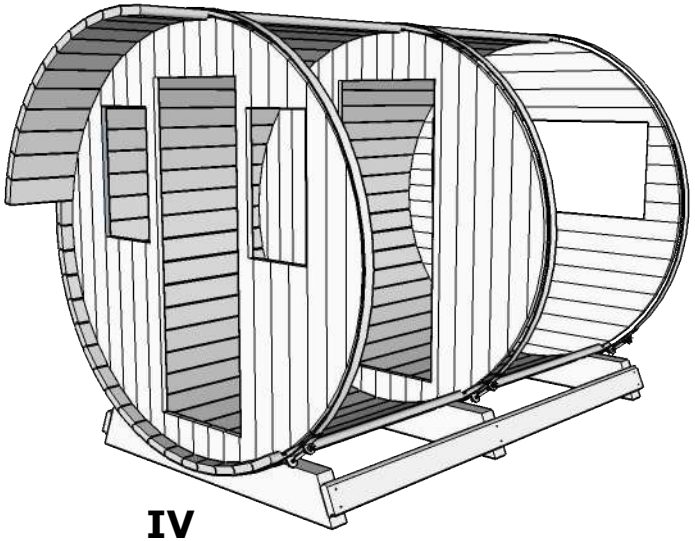

IV

Remove all brackets

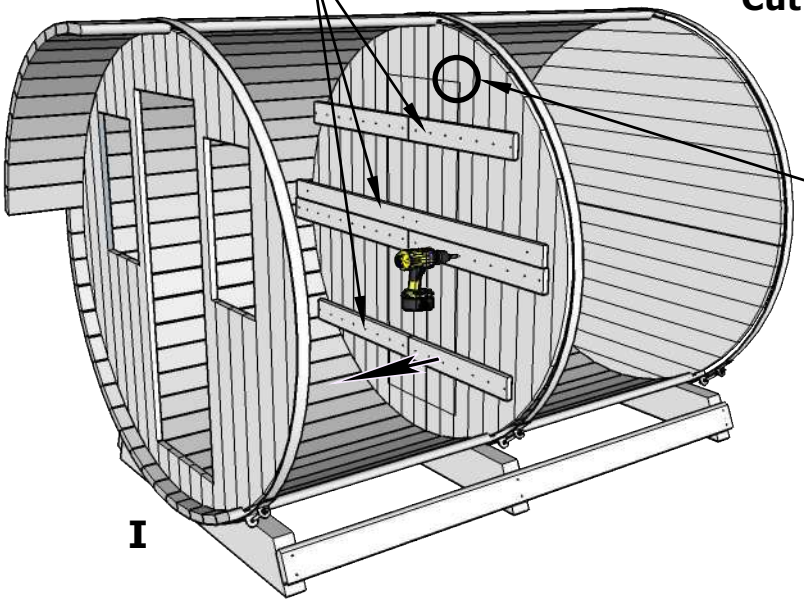

I

Cut out.

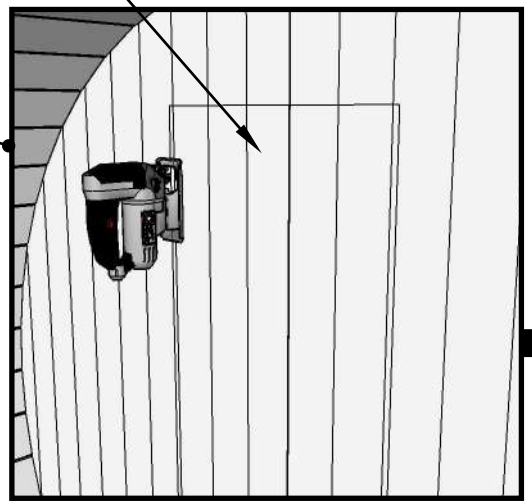

Mark window opening. NB ! add 10 mm window outer dimensions

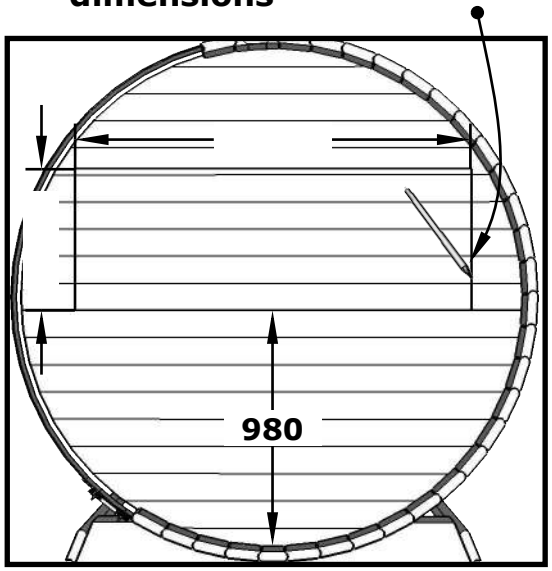

II

9.

Camping 330, Ø210



NB! Use waterlevel for door and window install.



III



IV



NB! Place door and windows from inside.

I

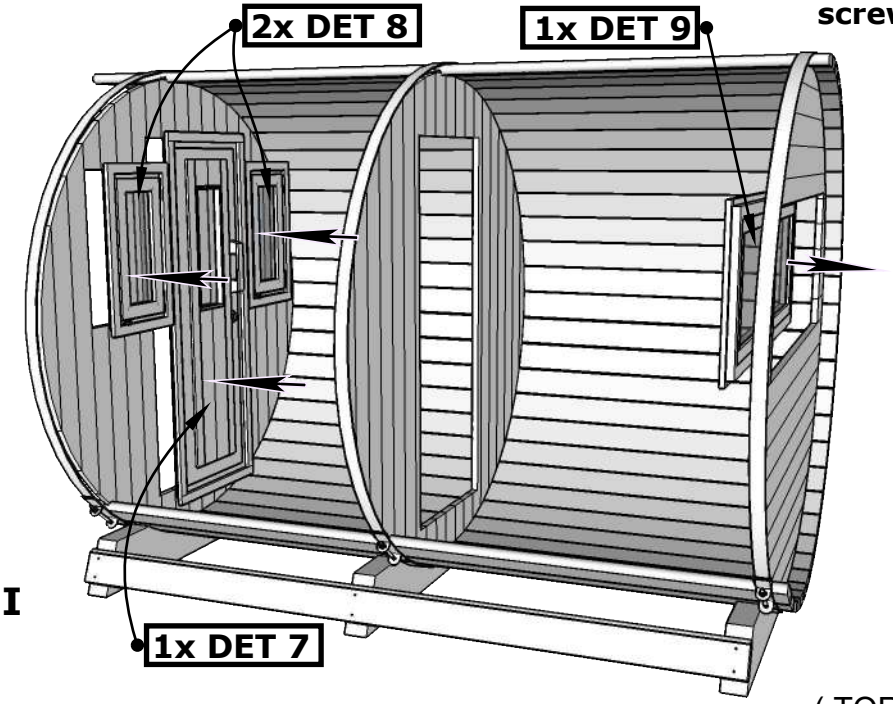

II

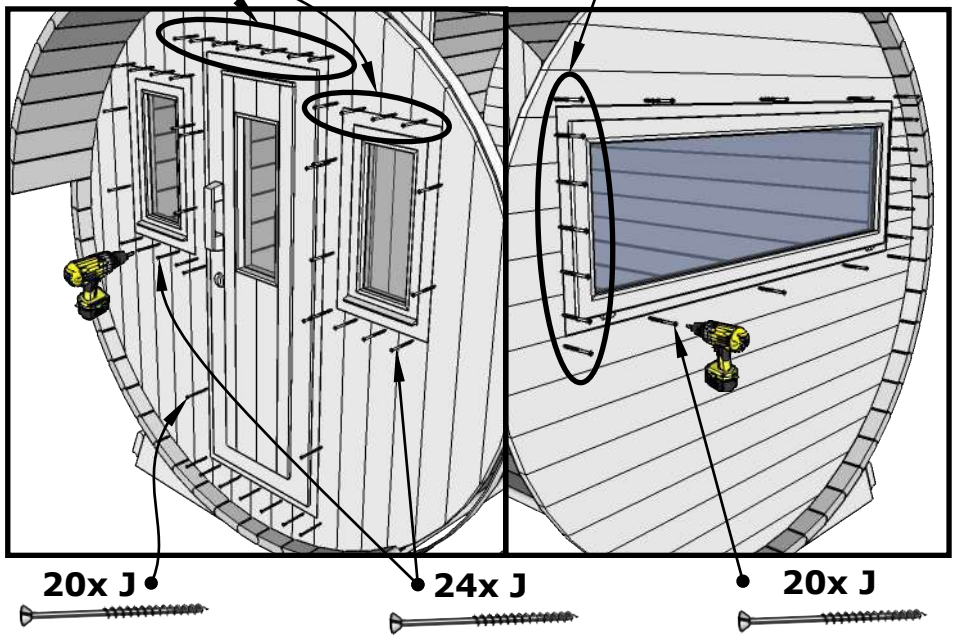

10.

Camping 330, Ø210



Horizontally fix
screw every board

20x J

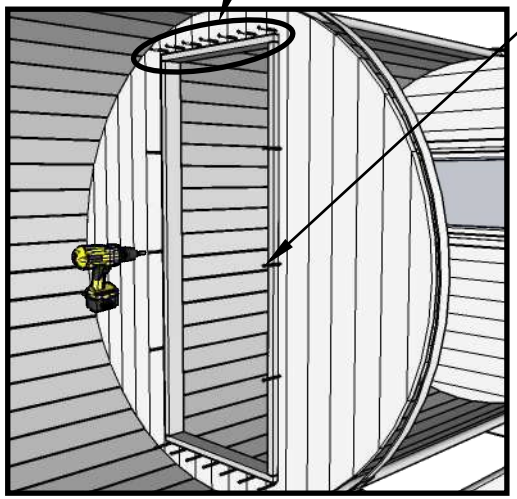

IV

14x H

2x DET 10c
2x DET 10d

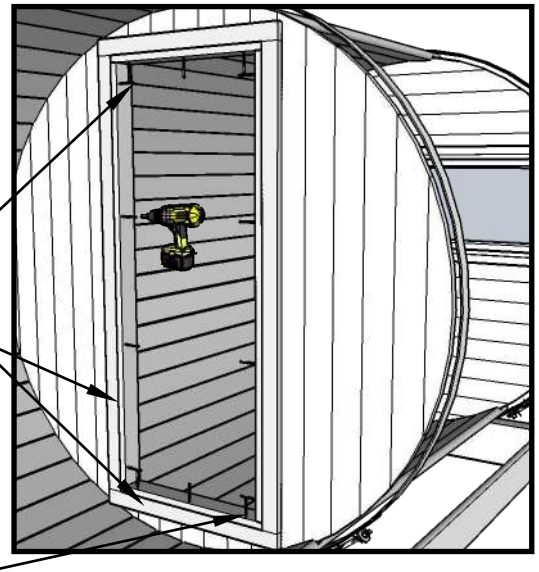

Drill holes Ø4mm
before screw.

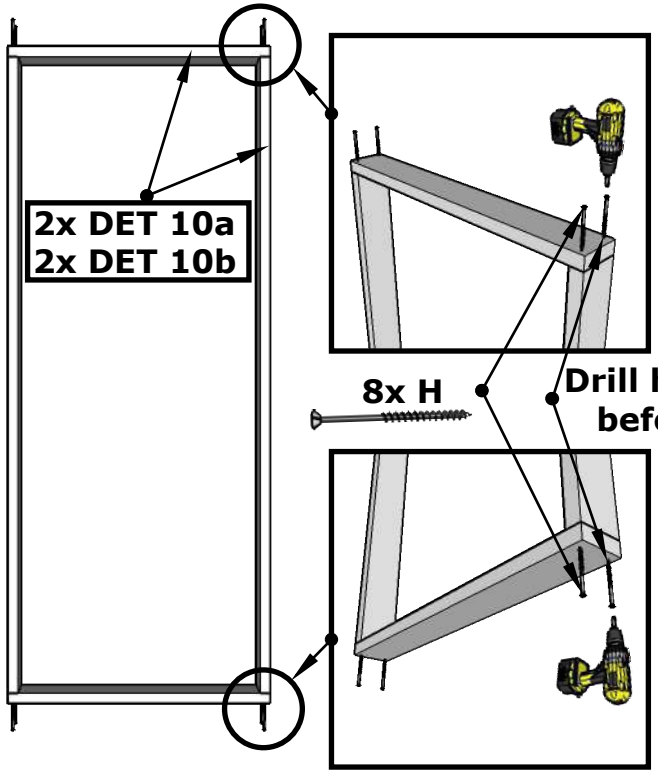

2x DET 10a
2x DET 10b

8x H

Drill holes Ø4mm
before screw.

I

2x DET 10c
2x DET 10d

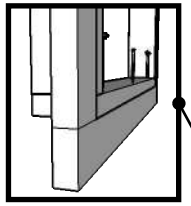

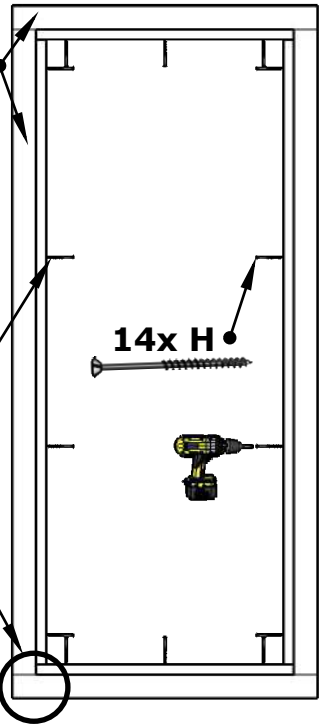

14x H

II

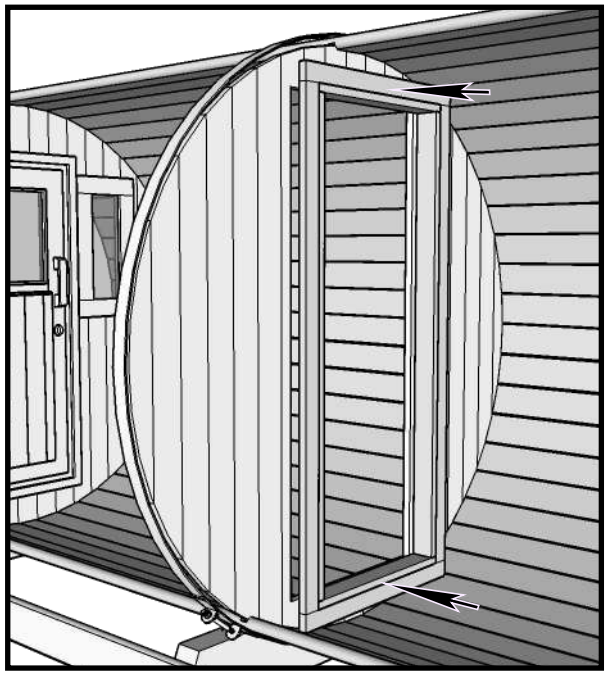

III

11.

Camping 330, Ø210



II



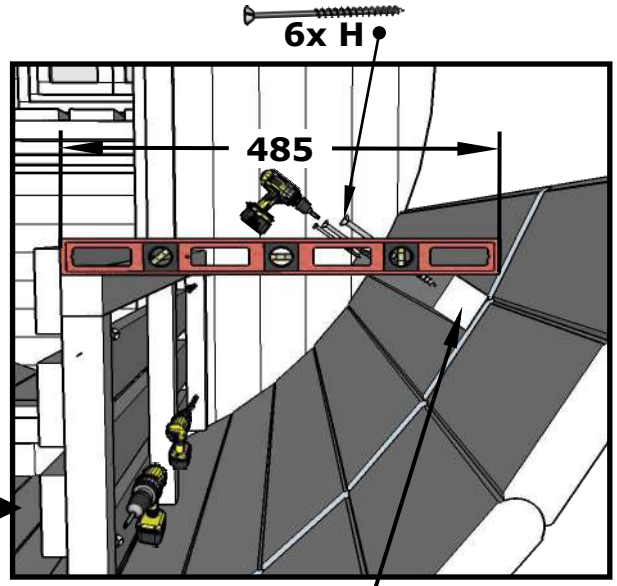

I

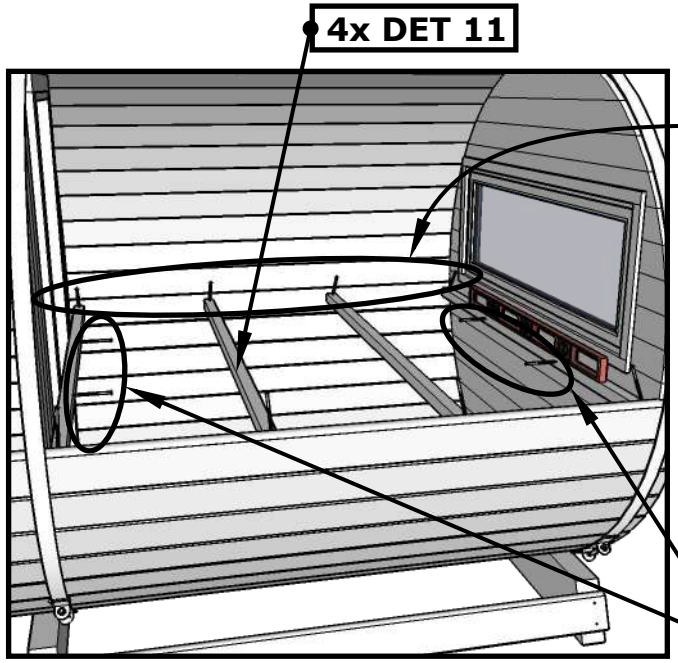

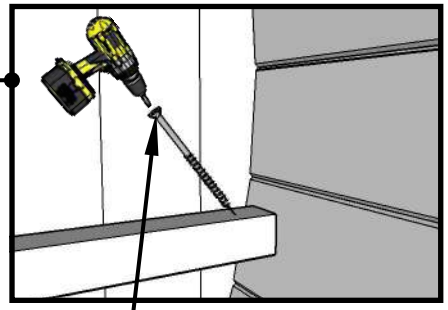

12x H



II

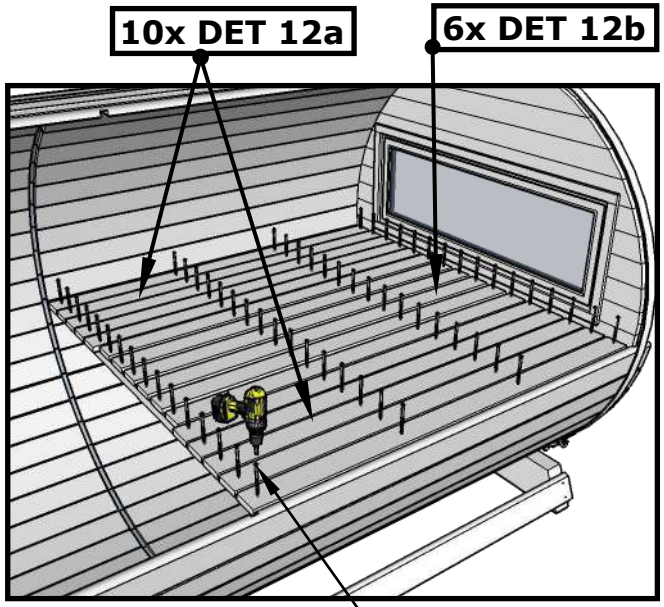

12.

Camping 330, Ø210



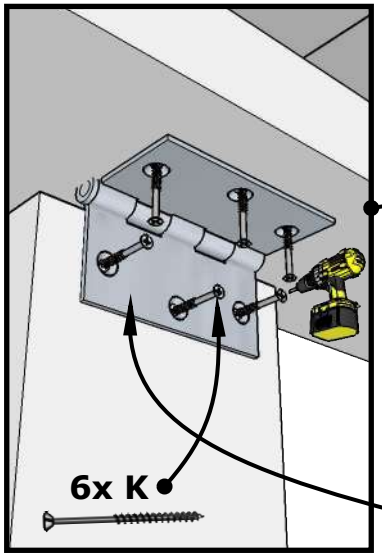

II

1x DET 18

1x DET 19

3x DET F

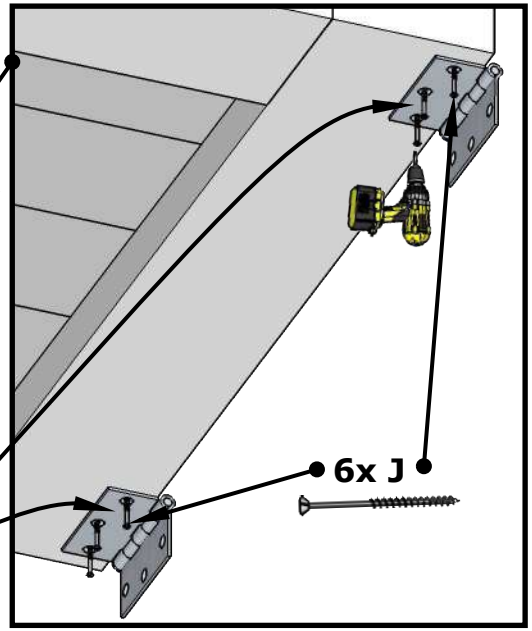

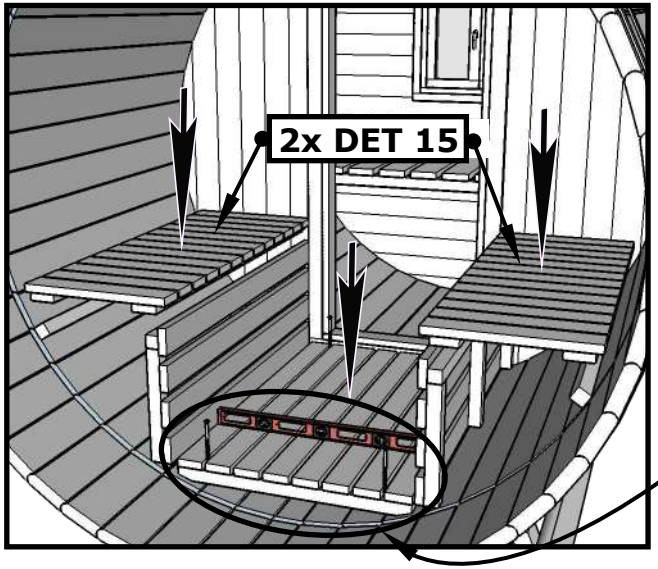

I

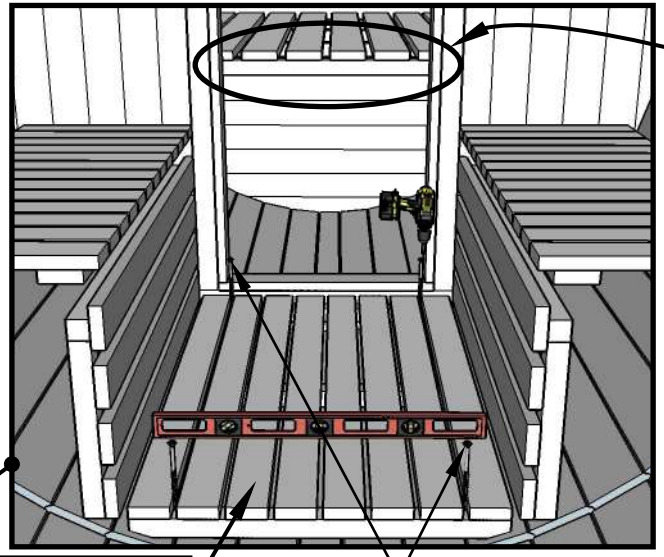



13.

Camping 330, Ø210



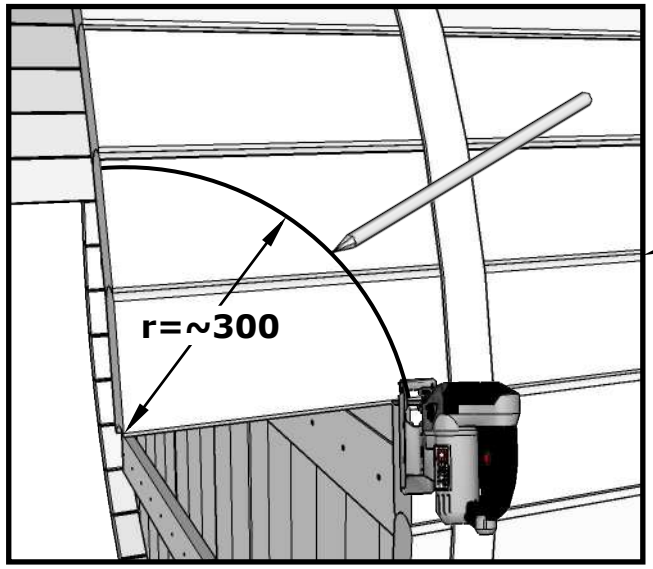

II

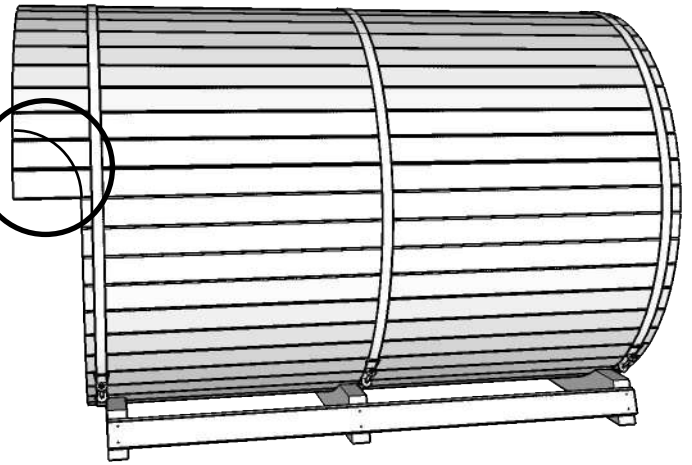

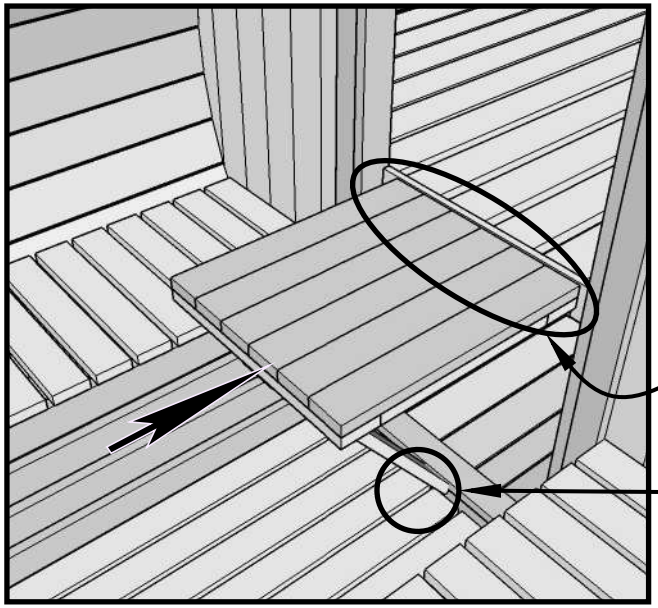

I

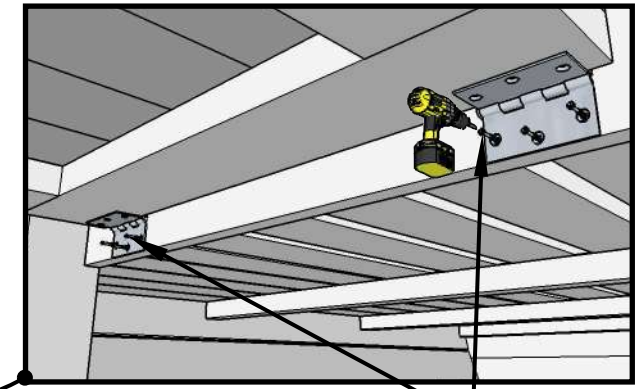

Cut table leg on right size, if necessary.

14.

Camping 330, Ø210



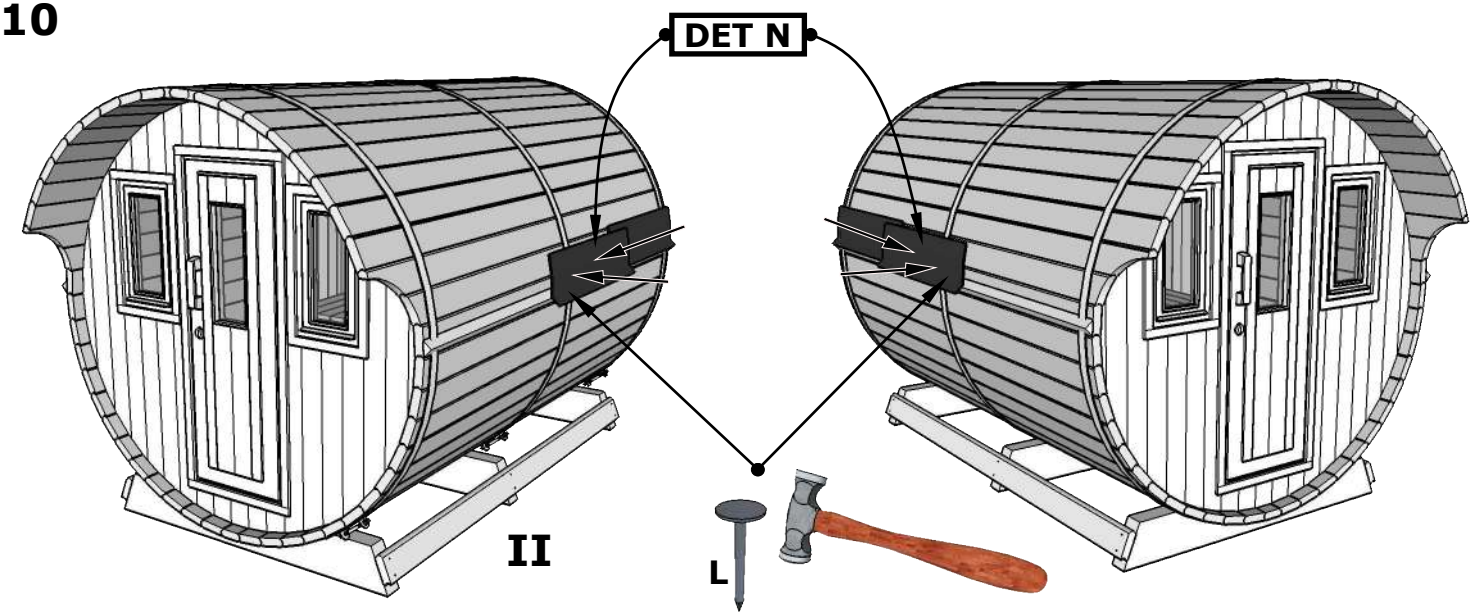



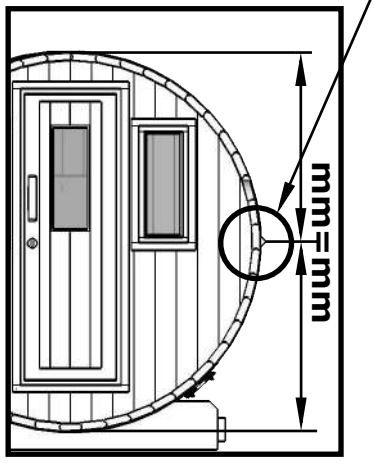

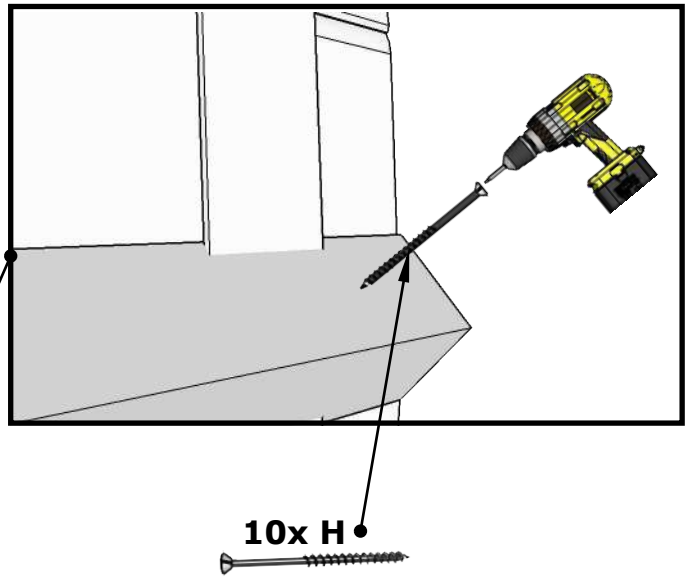

15.

Camping 330, Ø210



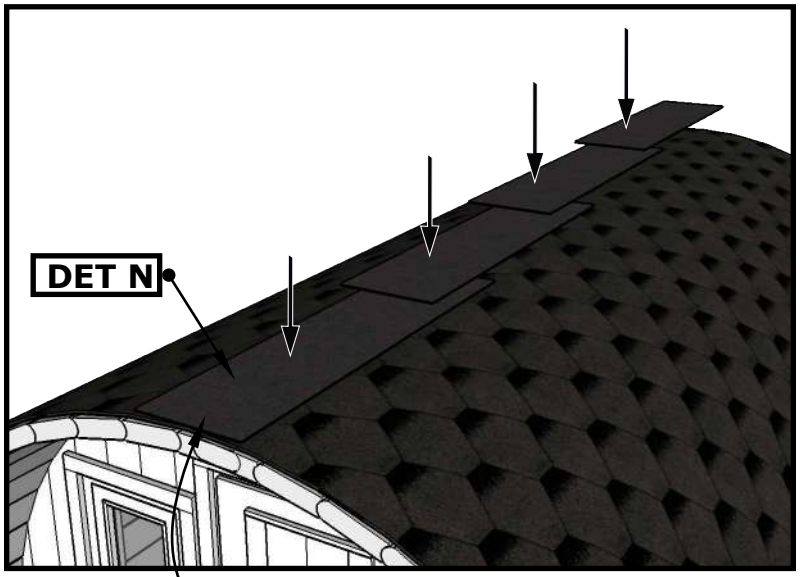

II

NB! Check also shingles installation manual inside shingles packages.

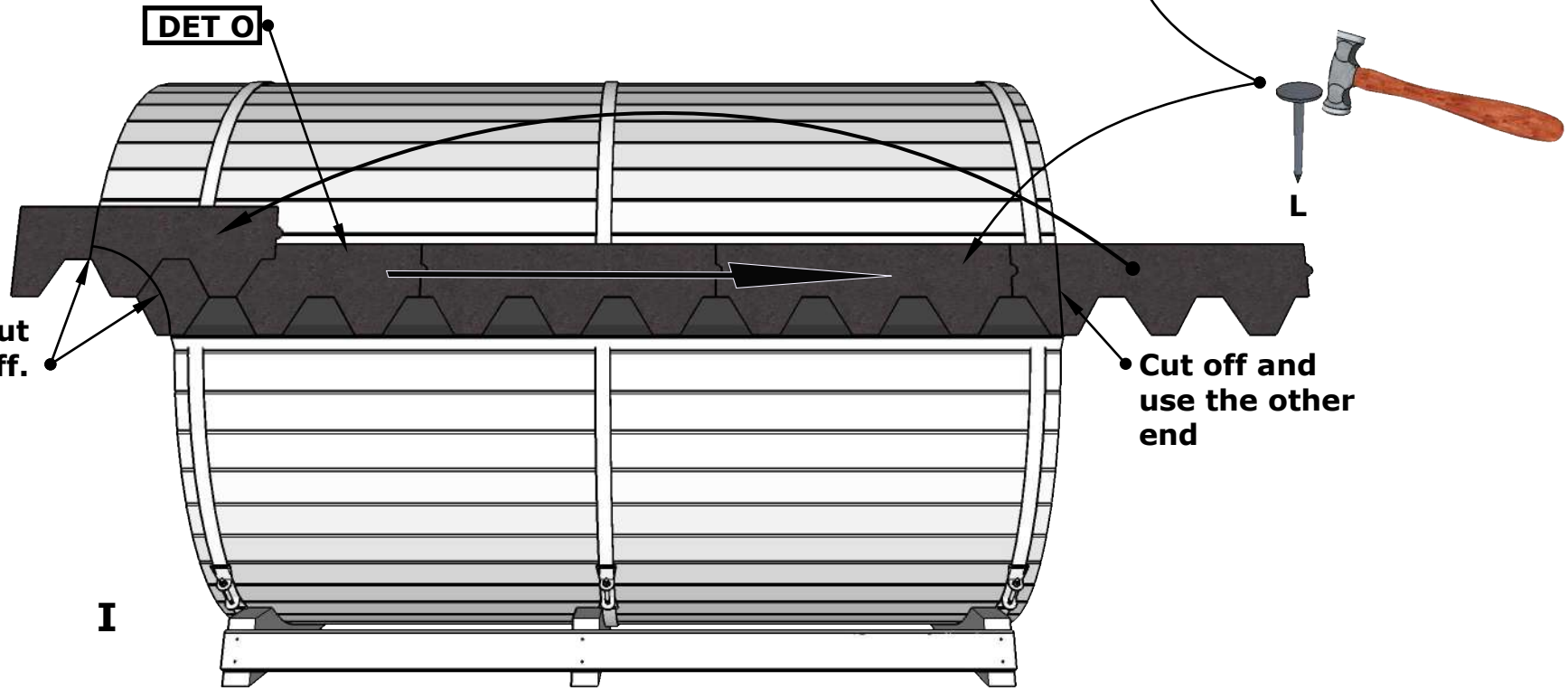

I

16.

Camping 330, Ø210



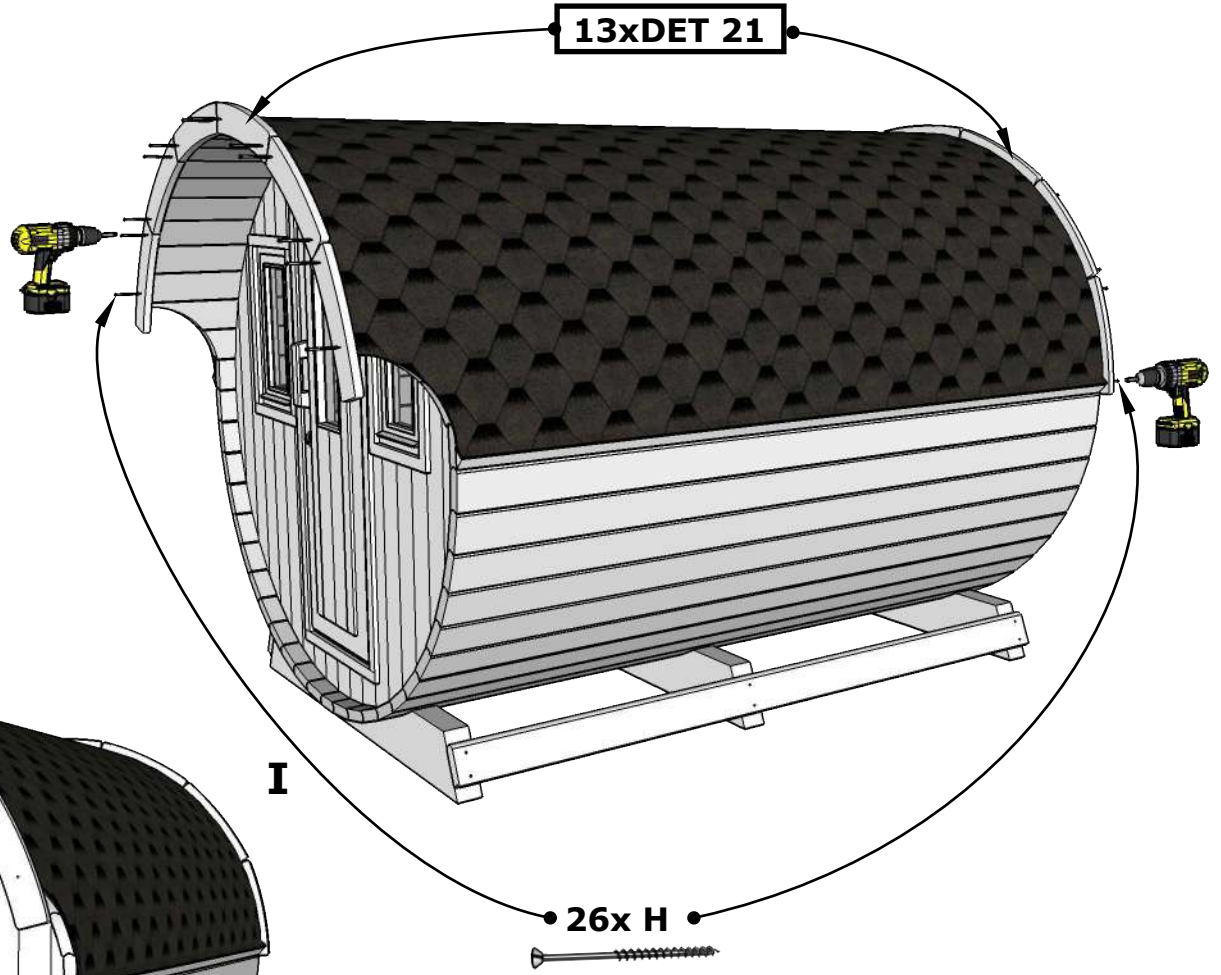

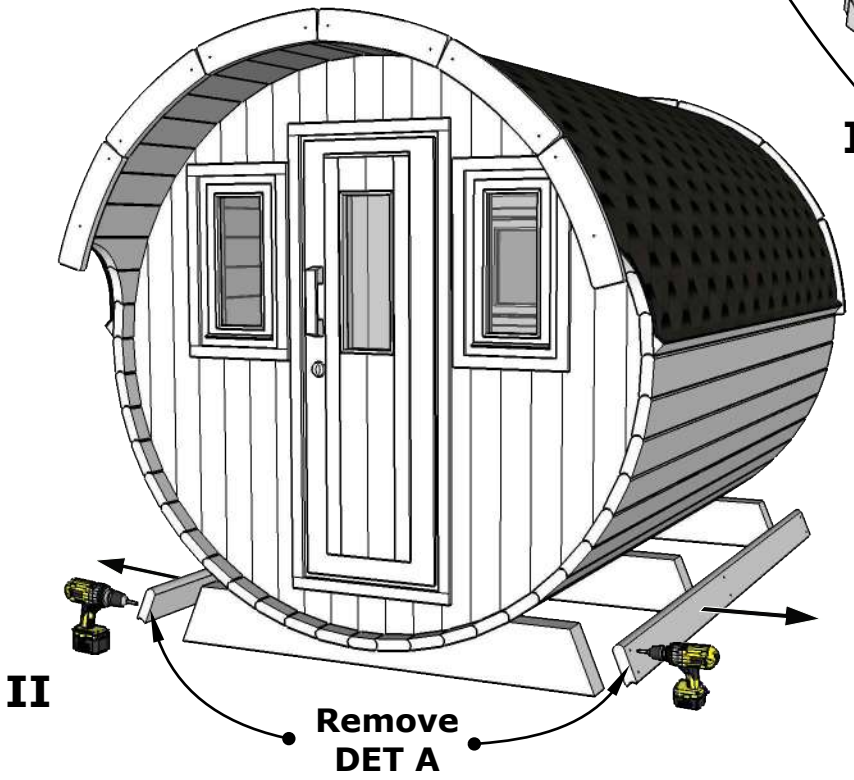

17.